ROBO CYLINDER

ERC2

Actuator with Integrated Controller (SIO Type)

Operation Manual **Seventh Edition**

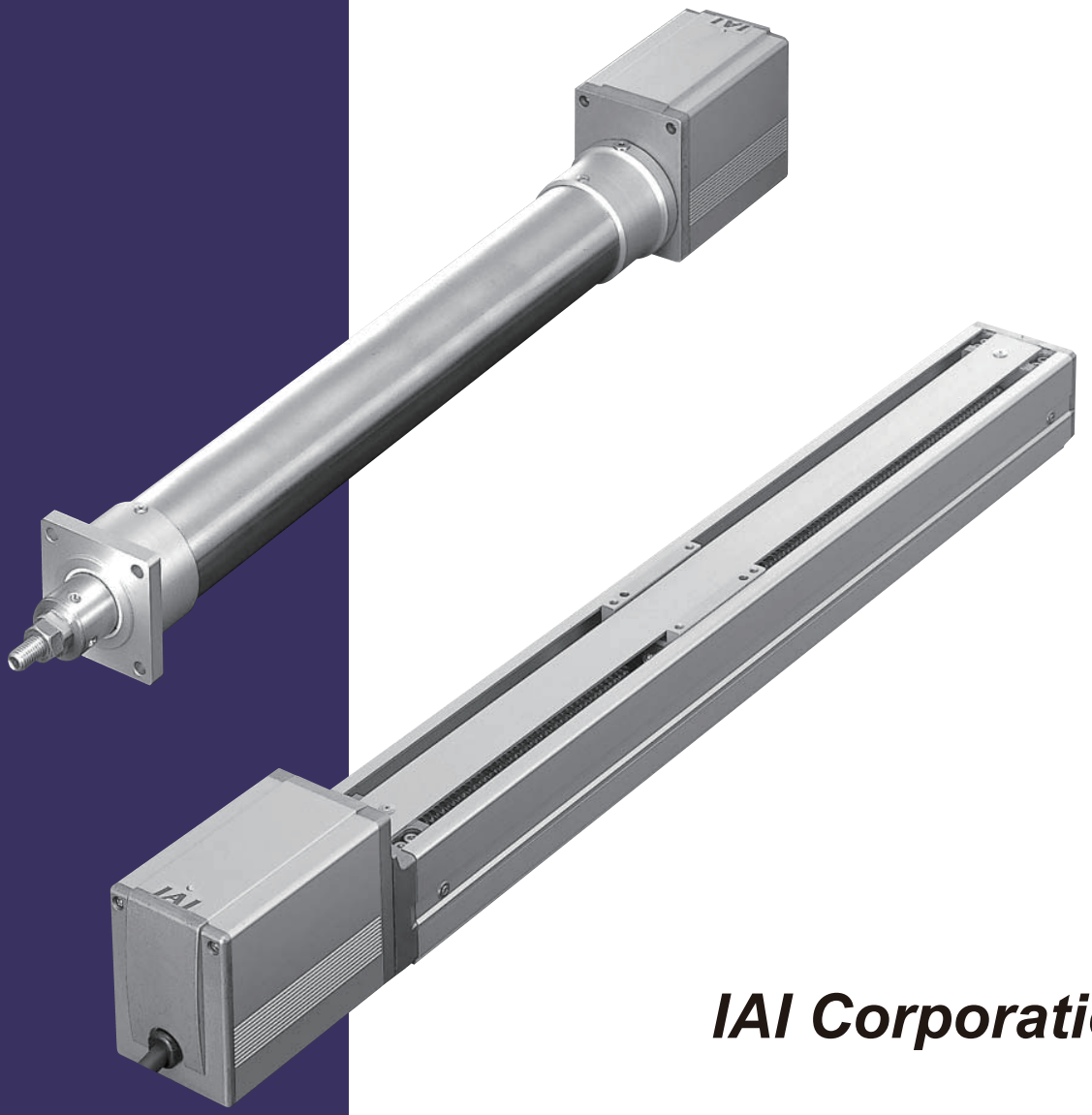

IAI Corporation

Please Read Before Use

Thank you for purchasing our product.

This instruction manual explains the handling methods, structure and maintenance of this product, providing the information you need in order to use the product safely.

Before using the product, be sure to read this manual and fully understand the contents explained herein to ensure safe use of the product.

Please downloaded the user's manual from our website.
You can download it free of charge. User registration is required for the first time downloading.
URL : www.iai-robot.co.jp/data_dl/CAD_MANUAL/

When using the product, print out of the necessary portions of the relevant manual, or please display it on your computer, tablet terminal, etc. so that you can check it immediately.

After reading the instruction manual, keep it in a convenient place so that whoever is handling the product can refer to it quickly when necessary.

[Important]

- This Operation Manual is original.
- The product cannot be operated in any way unless expressly specified in this Operation Manual. IAI shall assume no responsibility for the outcome of any operation not specified herein.
- Information contained in this Operation Manual is subject to change without notice for the purpose of product improvement.
- If you have any question or comment regarding the content of this manual, please contact the IAI sales office near you.
- Using or copying all or part of this Operation Manual without permission is prohibited.
- The company names, names of products and trademarks of each company shown in the sentences are registered trademarks.

ME0159-7H

ROBO CYLINDER

CAUTION

1. Using Multiple 24-V Power Supplies

If multiple 24-V power supplies are used, always connect the 0-V lines of all power supplies.
If not, damage to the controller board, SIO converter or other components may occur.

[Connection Example]

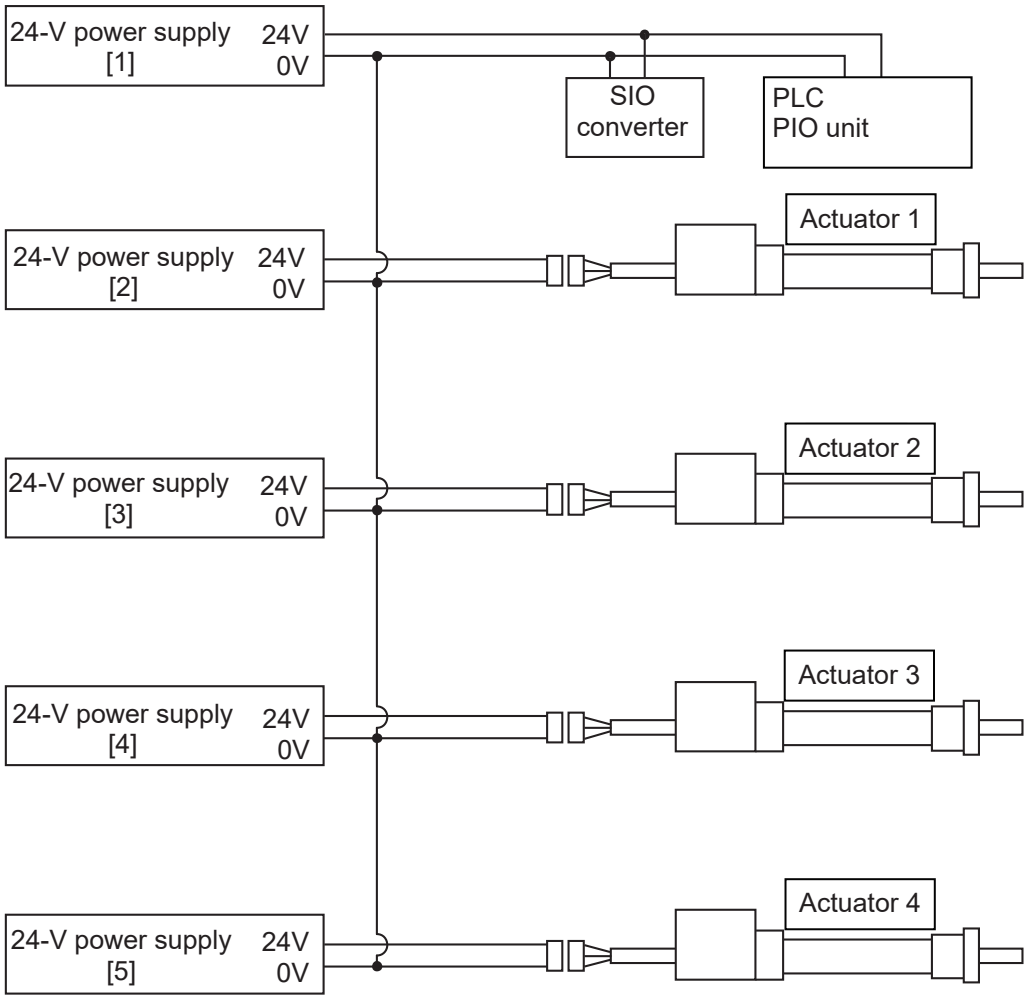

ROBO CYLINDER

CAUTION

2. PC Software and Teaching Pendant Models

This product offers new functions not available in the conventional ERC series.
To support these new functions, the communication protocol has been changed to a general Modbus-compliant protocol. Accordingly, the PC software programs and teaching pendants that have been used with the ERC series are no longer compatible with the ERC2 series.
Select a compatible program or teaching pendant from among the models listed below.

	Model number	Remarks
PC software (with RS232C communication cable)	RCM-101-MW	These software programs/teaching pedants can be used with the ERC series.
PC software (with USB communication cable)	RCM-101-USB	
Teaching pendant	RCM-T, RCM-TD	
Simple teaching pendant	RCM-E	
Data setting unit	RCM-P	

3. Backup of Latest Data

The built-in controller of this actuator uses a nonvolatile memory to store position table data and parameters. Normally data is retained after the power has been cut off, but stored data will be lost if the nonvolatile memory is damaged.
Regular backup of latest position table data and parameters not only ensures that your important data is safeguarded, but it also saves the data recovery time when a need arises to replace the controller board for some reason.
To back up your data, do one of the following:
[1] Save the data to a hard disk or other storage media from the PC software.
[2] Create a position table sheet or parameter sheet and write down the settings.

4. Pamphlet on Modbus Protocols

You can download a pamphlet compiling Modbus protocols from the operation manual download page on IAI's website:

website:www.intelligentactuator.com

If you wish to obtain this pamphlet, please contact your IAI sales representative.

CE Marking

If a compliance with the CE Marking is required, please follow Overseas Standards Compliance Manual (ME0287) that is provided separately.

Table of Contents

Safety Guide 1

1. Overview 10
   - 1.1 Introduction 10
   - 1.2 Key Features and Functions 11
   - 1.3 Differences from Air Cylinder Control 12
   - 1.4 Meaning of the Model Number 14
   - 1.5 Specifications 15
     - 1.5.1 Correlation Diagrams of Speed and Payload Capacity – Slider Type 16
     - 1.5.2 Correlation Diagrams of Speed and Payload Capacity – Rod Type 17
     - 1.5.3 The sound pressure level of this product does not exceed 70 dB 18
   - 1.6 Warranty 19
   - 1.7 Transportation and Handling 21
     - 1.7.1 Handling before Unpacking 21
     - 1.7.2 Handling after Unpacking 21
   - 1.8 Installation Environment and Noise Elimination 22
     - 1.8.1 Installation Environment 22
     - 1.8.2 Storage Environment 22
     - 1.8.3 Power Supply 23
     - 1.8.4 Noise Elimination 23
   - 1.9 Cabling 25

2. Installation 28
   - 2.1 Name of Each Part 28
     - 2.1.1 Slider Type (SA6C/SA7C) 28
     - 2.1.2 Rod Type (RA6C/RA7C) 29
     - 2.1.3 (1) Rod Type with a Single Guide (RGS6C/RGS7C) 29
       - (2) Rod Type with Double Guides (RGD6C/RGD7C) 29
   - 2.2 Installation 30
     - 2.2.1 Slider Type 30
     - 2.2.2 Rod Type 31
     - 2.2.3 Installing the Load 33

3. Electrical Specifications 35
   - 3.1 Controller 35
   - 3.2 Input/Output Interfaces 36
     - 3.2.1 Extension Cable 37
   - 3.3 SIO Converter (Optional) 38

4. Wiring 40
   - 4.1 Basic Configuration with SIO Converter 40
     - 4.1.1 SIO Communication Connection Using a Relay Terminal Block 42
     - 4.1.2 SIO Communication Connection Using a 4-Way Junction 43
     - 4.1.3 Address Assignment 44
   - 4.2 Configuration Using a Gateway Unit 45
     - 4.2.1 SIO Communication Connection Using a Relay Terminal Block 45
     - 4.2.2 SIO Communication Connection Using a 4-Way Junction 46

4.2.3 Connecting an Emergency Stop Circuit, Etc. ... 47

5. Explanation of Operating Functions ... 48
5.1 Description of Position Table ... 49
5.1.1 Relationship of Push Force at Standstill and Current-Limiting Value ... 53
5.2 Data Set in the Numerical Specification Mode ... 55
5.3 Explanation of Functions ... 55
5.3.1 Control Signals and Control Data ... 57
5.3.2 Timings after Power On ... 63
5.3.3 Home Return Operation ... 65
5.3.4 Positioning Operation ... 67
5.3.5 Push & Hold Operation ... 71
5.3.6 Pause ... 75
5.3.7 Speed Change during Movement ... 76
5.3.8 Operation at Different Acceleration and Deceleration ... 78
5.3.9 Zone Signal ... 79
5.3.10 Pitch Feed by Incremental Specification ... 80
5.3.11 Power-Saving Mode at Standby Positions ... 84

6. Parameter Settings ... 85
6.1 Parameter Table ... 85
6.2 Detailed Explanation of Parameters ... 86
6.2.1 Parameters Relating to the Actuator Stroke Range ... 86
6.2.2 Parameters Relating to the Actuator Operating Characteristics ... 88
6.2.3 Parameters Relating to the External Interface ... 92
6.2.4 Servo Gain Adjustment ... 94

7. Troubleshooting ... 96
7.1 Action to Be Taken upon Occurrence of Problem ... 96
7.2 Alarm Level Classification ... 97
7.2.1 How to Reset Alarms ... 97
7.3 Alarm Description and Cause/Action ... 98
7.4 Messages Displayed during Operation Using the Teaching Pendant or PC Software ... 103
7.5 Specific Problems ... 105

8. Maintenance and Inspection ... 107
8.1 Inspection Items and Schedule ... 107
8.2 Visual Inspection of Appearance ... 107
8.3 Cleaning ... 107
8.4 Internal Check (Slider Type) ... 108
8.5 Internal Cleaning (Slider Type) ... 109
8.6 Greasing the Guide (Slider Type) ... 109
8.7 Greasing the Ball Screw (Slider Type) ... 111
8.8 Greasing the Rod Slide Surface ... 112
8.9 Motor Replacement Procedure ... 113

9. Operation Examples ... 115

10. Appendix ... 116
10.1 External Dimensions ... 116
10.1.1 ERC2-SA6C ... 116
10.1.2 ERC2-SA7C ... 117

10.1.3 ERC2-RA6C 118
10.1.4 ERC2-RA7C 119
10.1.5 ERC2-RGS6C 120
10.1.6 ERC2-RGS7C 120
10.1.7 ERC2-RGD6C 121
10.1.8 ERC2-RGD7C 121
10.2 Recording of Position Table 122
10.3 Parameter Records 125
Change History 126

Safety Guide

"Safety Guide" has been written to use the machine safely and so prevent personal injury or property damage beforehand. Make sure to read it before the operation of this product.

Safety Precautions for Our Products

The common safety precautions for the use of any of our robots in each operation.

No.	Operation Description	Description
1	Model Selection	● This product has not been planned and designed for the application where high level of safety is required, so the guarantee of the protection of human life is impossible. Accordingly, do not use it in any of the following applications. 1) Medical equipment used to maintain, control or otherwise affect human life or physical health. 2) Mechanisms and machinery designed for the purpose of moving or transporting people (For vehicle, railway facility or air navigation facility) 3) Important safety parts of machinery (Safety device, etc.) ● Do not use the product outside the specifications. Failure to do so may considerably shorten the life of the product. ● Do not use it in any of the following environments. 1) Location where there is any inflammable gas, inflammable object or explosive 2) Place with potential exposure to radiation 3) Location with the ambient temperature or relative humidity exceeding the specification range 4) Location where radiant heat is added from direct sunlight or other large heat source 5) Location where condensation occurs due to abrupt temperature changes 6) Location where there is any corrosive gas (sulfuric acid or hydrochloric acid) 7) Location exposed to significant amount of dust, salt or iron powder 8) Location subject to direct vibration or impact ● For an actuator used in vertical orientation, select a model which is equipped with a brake. If selecting a model with no brake, the moving part may drop when the power is turned OFF and may cause an accident such as an injury or damage on the work piece.

No.	Operation Description	Description
2	Transportation	● When carrying a heavy object, do the work with two or more persons or utilize equipment such as crane. ● When the work is carried out with 2 or more persons, make it clear who is to be the leader and who to be the follower(s) and communicate well with each other to ensure the safety of the workers. ● When in transportation, consider well about the positions to hold, weight and weight balance and pay special attention to the carried object so it would not get hit or dropped. ● Transport it using an appropriate transportation measure. The actuators available for transportation with a crane have eyebolts attached or there are tapped holes to attach bolts. Follow the instructions in the instruction manual for each model. ● Do not step or sit on the package. ● Do not put any heavy thing that can deform the package, on it. ● When using a crane capable of 1t or more of weight, have an operator who has qualifications for crane operation and sling work. ● When using a crane or equivalent equipments, make sure not to hang a load that weighs more than the equipment's capability limit. ● Use a hook that is suitable for the load. Consider the safety factor of the hook in such factors as shear strength. ● Do not get on the load that is hung on a crane. ● Do not leave a load hung up with a crane. ● Do not stand under the load that is hung up with a crane.
3	Storage and Preservation	● The storage and preservation environment conforms to the installation environment. However, especially give consideration to the prevention of condensation. ● Store the products with a consideration not to fall them over or drop due to an act of God such as earthquake.
4	Installation and Start	(1) Installation of Robot Main Body and Controller, etc. ● Make sure to securely hold and fix the product (including the work part). A fall, drop or abnormal motion of the product may cause a damage or injury. Also, be equipped for a fall-over or drop due to an act of God such as earthquake. ● Do not get on or put anything on the product. Failure to do so may cause an accidental fall, injury or damage to the product due to a drop of anything, malfunction of the product, performance degradation, or shortening of its life. ● When using the product in any of the places specified below, provide a sufficient shield. 1) Location where electric noise is generated 2) Location where high electrical or magnetic field is present 3) Location with the mains or power lines passing nearby 4) Location where the product may come in contact with water, oil or chemical droplets

No.	Operation Description	Description
4	Installation and Start	(2) Cable Wiring ● Use our company's genuine cables for connecting between the actuator and controller, and for the teaching tool. ● Do not scratch on the cable. Do not bend it forcibly. Do not pull it. Do not coil it around. Do not insert it. Do not put any heavy thing on it. Failure to do so may cause a fire, electric shock or malfunction due to leakage or continuity error. ● Perform the wiring for the product, after turning OFF the power to the unit, so that there is no wiring error. ● When the direct current power (+24V) is connected, take the great care of the directions of positive and negative poles. If the connection direction is not correct, it might cause a fire, product breakdown or malfunction. ● Connect the cable connector securely so that there is no disconnection or looseness. Failure to do so may cause a fire, electric shock or malfunction of the product. ● Never cut and/or reconnect the cables supplied with the product for the purpose of extending or shortening the cable length. Failure to do so may cause the product to malfunction or cause fire.
		(3) Grounding ● The grounding operation should be performed to prevent an electric shock or electrostatic charge, enhance the noise-resistance ability and control the unnecessary electromagnetic radiation. ● For the ground terminal on the AC power cable of the controller and the grounding plate in the control panel, make sure to use a twisted pair cable with wire thickness 0.5mm^2 (AWG20 or equivalent) or more for grounding work. For security grounding, it is necessary to select an appropriate wire thickness suitable for the load. Perform wiring that satisfies the specifications (electrical equipment technical standards). ● Perform Class D Grounding (former Class 3 Grounding with ground resistance 100Ω or below).

No.	Operation Description	Description
4	Installation and Start	(4) Safety Measures ● When the work is carried out with 2 or more persons, make it clear who is to be the leader and who to be the follower(s) and communicate well with each other to ensure the safety of the workers. ● When the product is under operation or in the ready mode, take the safety measures (such as the installation of safety and protection fence) so that nobody can enter the area within the robot's movable range. When the robot under operation is touched, it may result in death or serious injury. ● Make sure to install the emergency stop circuit so that the unit can be stopped immediately in an emergency during the unit operation. ● Take the safety measure not to start up the unit only with the power turning ON. Failure to do so may start up the machine suddenly and cause an injury or damage to the product. ● Take the safety measure not to start up the machine only with the emergency stop cancellation or recovery after the power failure. Failure to do so may result in an electric shock or injury due to unexpected power input. ● When the installation or adjustment operation is to be performed, give clear warnings such as "Under Operation; Do not turn ON the power!" etc. Sudden power input may cause an electric shock or injury. ● Take the measure so that the work part is not dropped in power failure or emergency stop. ● Wear protection gloves, goggle or safety shoes, as necessary, to secure safety. ● Do not insert a finger or object in the openings in the product. Failure to do so may cause an injury, electric shock, damage to the product or fire. ● When releasing the brake on a vertically oriented actuator, exercise precaution not to pinch your hand or damage the work parts with the actuator dropped by gravity.
5	Teaching	● When the work is carried out with 2 or more persons, make it clear who is to be the leader and who to be the follower(s) and communicate well with each other to ensure the safety of the workers. ● Perform the teaching operation from outside the safety protection fence, if possible. In the case that the operation is to be performed unavoidably inside the safety protection fence, prepare the "Stipulations for the Operation" and make sure that all the workers acknowledge and understand them well. ● When the operation is to be performed inside the safety protection fence, the worker should have an emergency stop switch at hand with him so that the unit can be stopped any time in an emergency. ● When the operation is to be performed inside the safety protection fence, in addition to the workers, arrange a watchman so that the machine can be stopped any time in an emergency. Also, keep watch on the operation so that any third person can not operate the switches carelessly. ● Place a sign "Under Operation" at the position easy to see. ● When releasing the brake on a vertically oriented actuator, exercise precaution not to pinch your hand or damage the work parts with the actuator dropped by gravity. * Safety protection Fence : In the case that there is no safety protection fence, the movable range should be indicated.

No.	Operation Description	Description
6	Trial Operation	● When the work is carried out with 2 or more persons, make it clear who is to be the leader and who to be the follower(s) and communicate well with each other to ensure the safety of the workers. ● After the teaching or programming operation, perform the check operation one step by one step and then shift to the automatic operation. ● When the check operation is to be performed inside the safety protection fence, perform the check operation using the previously specified work procedure like the teaching operation. ● Make sure to perform the programmed operation check at the safety speed. Failure to do so may result in an accident due to unexpected motion caused by a program error, etc. ● Do not touch the terminal block or any of the various setting switches in the power ON mode. Failure to do so may result in an electric shock or malfunction.
7	Automatic Operation	● Check before starting the automatic operation or rebooting after operation stop that there is nobody in the safety protection fence. ● Before starting automatic operation, make sure that all peripheral equipment is in an automatic-operation-ready state and there is no alarm indication. ● Make sure to operate automatic operation start from outside of the safety protection fence. ● In the case that there is any abnormal heating, smoke, offensive smell, or abnormal noise in the product, immediately stop the machine and turn OFF the power switch. Failure to do so may result in a fire or damage to the product. ● When a power failure occurs, turn OFF the power switch. Failure to do so may cause an injury or damage to the product, due to a sudden motion of the product in the recovery operation from the power failure.

No.	Operation Description	Description
8	Maintenance and Inspection	● When the work is carried out with 2 or more persons, make it clear who is to be the leader and who to be the follower(s) and communicate well with each other to ensure the safety of the workers. ● Perform the work out of the safety protection fence, if possible. In the case that the operation is to be performed unavoidably inside the safety protection fence, prepare the “Stipulations for the Operation” and make sure that all the workers acknowledge and understand them well. ● When the work is to be performed inside the safety protection fence, basically turn OFF the power switch. ● When the operation is to be performed inside the safety protection fence, the worker should have an emergency stop switch at hand with him so that the unit can be stopped any time in an emergency. ● When the operation is to be performed inside the safety protection fence, in addition to the workers, arrange a watchman so that the machine can be stopped any time in an emergency. Also, keep watch on the operation so that any third person can not operate the switches carelessly. ● Place a sign “Under Operation” at the position easy to see. ● For the grease for the guide or ball screw, use appropriate grease according to the Instruction Manual for each model. ● Do not perform the dielectric strength test. Failure to do so may result in a damage to the product. ● When releasing the brake on a vertically oriented actuator, exercise precaution not to pinch your hand or damage the work parts with the actuator dropped by gravity. ● The slider or rod may get misaligned OFF the stop position if the servo is turned OFF. Be careful not to get injured or damaged due to an unnecessary operation. ● Pay attention not to lose the cover or untightened screws, and make sure to put the product back to the original condition after maintenance and inspection works. Use in incomplete condition may cause damage to the product or an njury. * Safety protection Fence : In the case that there is no safety protection fence, the movable range should be indicated.
9	Modification and Dismantle	● Do not modify, disassemble, assemble or use of maintenance parts not specified based at your own discretion.
10	Disposal	● When the product becomes no longer usable or necessary, dispose of it properly as an industrial waste. ● When removing the actuator for disposal, pay attention to drop of components when detaching screws. ● Do not put the product in a fire when disposing of it. The product may burst or generate toxic gases.
11	Other	● Do not come close to the product or the harnesses if you are a person who requires a support of medical devices such as a pacemaker. Doing so may affect the performance of your medical device. ● See Overseas Specifications Compliance Manual to check whether complies if necessary. ● For the handling of actuators and controllers, follow the dedicated instruction manual of each unit to ensure the safety. ● Using the devise in a way not indicated by IAI may lose the protection performance equipped to the device.

Alert Indication

The safety precautions are divided into “Danger”, “Warning”, “Caution” and “Notice” according to the warning level, as follows, and described in the Instruction Manual for each model.

Level	Degree of Danger and Damage	Symbol
Danger	This indicates an imminently hazardous situation which, if the product is not handled correctly, will result in death or serious injury.	Danger
Warning	This indicates a potentially hazardous situation which, if the product is not handled correctly, could result in death or serious injury.	Warning
Caution	This indicates a potentially hazardous situation which, if the product is not handled correctly, may result in minor injury or property damage.	Caution
Notice	This indicates lower possibility for the injury, but should be kept to use this product properly.	Notice

Caution in Handling

1. Do not set speeds and accelerations/decelerations equal to or greater than the respective ratings.
   If the actuator is operated at a speed or acceleration/deceleration exceeding the allowable value, abnormal noise or vibration, failure, or shorter life may result.
   In the case of interpolated operation of combined axes, the speed and acceleration/deceleration settings should correspond to the minimum values among all combined axes.

2. Keep the load moment within the allowable value.
   If the actuator is operated under a load equal to or greater than the allowable load moment, abnormal noise or vibration, failure, or shorter life may result. In an extreme case, flaking may occur.

3. Make sure to attach the actuator properly by following this instruction manual.
   Using the product with the actuator not being certainly retained or affixed may cause abnormal noise, vibration, malfunction or shorten the product life.

4. Do not attempt to apply any force except for the radial load to actuators equipped with the single guide. Applying force other than radial load could cause a failure on the actuator.
Single guide can receive load only to the vertical direction shown in the figure below (the direction of a line that the rod tip and guide rod tip are joined).

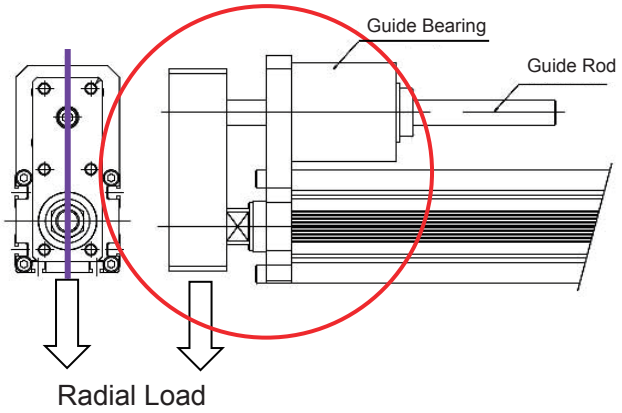

[Direction Unacceptable to Receive Load]

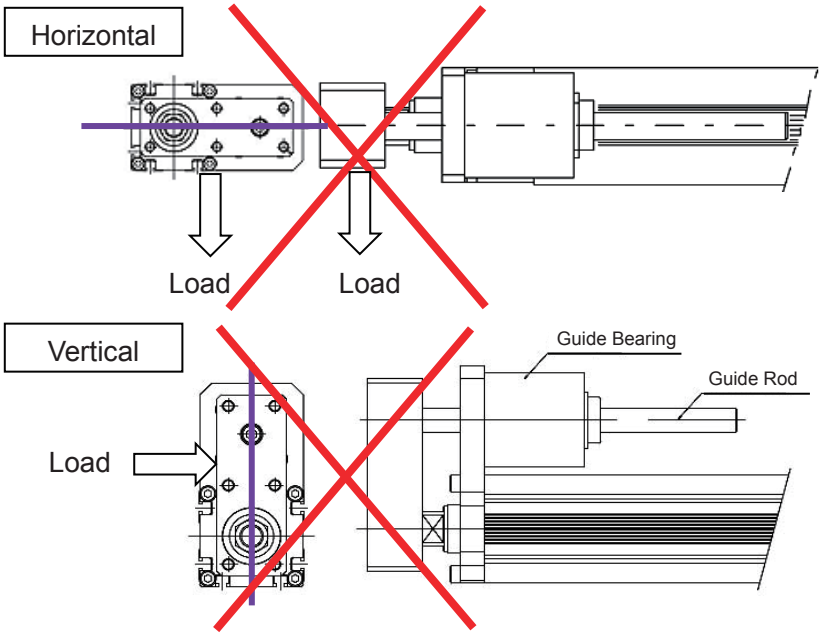

Do not attempt to use the unit in an environment that load torque or load moment can be applied as shown in the figures below.

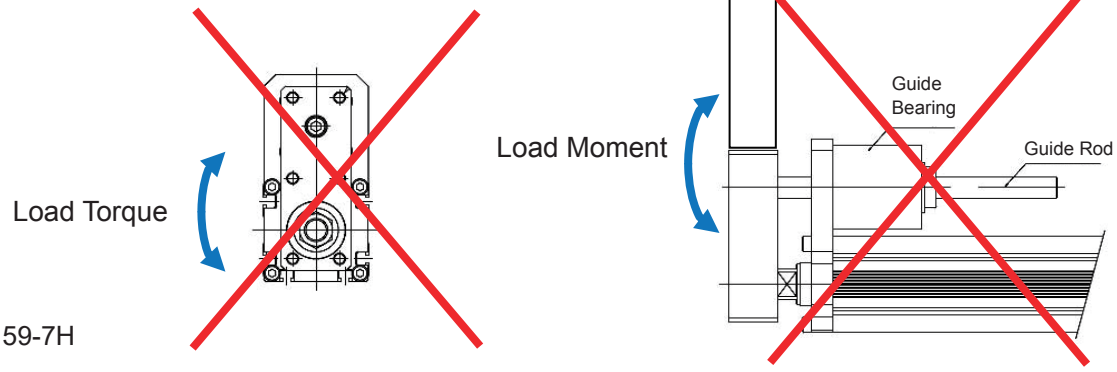

1. Overview

1.1 Introduction

Thank you for purchasing the Easy All-in-One ROBO Cylinder (hereinafter referred to as “ERC2-SE”).

This product retains all benefits of the conventional ERC series, while incorporating new features that provide greater convenience and enhanced safety to the users.
Among the ERC2 Series actuators, this product can be operated via serial communication in the position number specification mode or the direct numerical specification mode.
The following two communication patterns are supported by serial communication systems:
[1] Communicate with a host PLC, etc., via a gateway unit in various field network environments (DeviceNet, CC-Link and Profibus).
[2] Communicate serially with a PC or PLC via a SIO converter based on the RS-232C protocol.
Please read this manual carefully and handle the product with utmost care while ensuring its correct operation.
It is advised that you also peruse the operation manual for your gateway unit as well as the Operation Manual for Serial Communication Protocol.

When starting your system or in the event of failure, also refer to the operation manuals for the teaching pendant, PC software and other components you are using with this product.

This manual does not cover all possible operations other than normal operations, or unexpected events such as complex signal changes resulting from operating the product at critical timings. Accordingly, think of any item not specifically mentioned in this manual as “prohibited.”

* We have made every effort to ensure accuracy of the information provided in this manual. Should you find an error, however, or if you have any comment, please contact IAI.
Keep this manual in a convenient place so it can be referenced readily when necessary.

1.2 Key Features and Functions

(1) Input/output of control signals by means of RS485 serial communication (conforming to the Modbus protocol)

(2) 64 positioning points

(3) Variable zone output boundaries
Before, zone output boundaries were set by parameters and therefore fixed. For greater convenience, this product permits setting of zone output boundaries in the position table. (Available in the position number specification mode only)
Set desired boundaries to prevent contact with peripheral equipment, shorten the tact time, etc.

(4) Different acceleration and deceleration settings (Available in the position number specification mode only)
Acceleration and deceleration can be set differently in the position table.
In situations where shock and vibration upon stopping must be minimized depending on the material or shape of the load, you can decrease only the deceleration to allow the actuator to stop along a gradual deceleration curve.

(5) Limitation of moving speed during adjustment by trial operation
During adjustment by trial operation, the moving speed of the actuator can be limited to ensure safety.

(6) Power-saving measure
In general, pulse motors generate greater holding current than AC servo motors in a standstill state. Accordingly, we provide a power-saving mode to conserve electricity in situations where the actuator stands by for a long period.

1.3 Differences from Air Cylinder Control

This section explains the key differences between an air cylinder and this controller for users who are familiar with air cylinders but have never used a motorized cylinder before.
Refer to the table below to perform appropriate controls.

<table>
<tr><th>Item</th><th>Air cylinder</th><th>This controller</th></tr>
<tr><td>Drive method</td><td>Driven by air pressure based on electromagnetic valve control.</td><td>Driven by a ball screw or timing belt using a pulse motor.</td></tr>
<tr><td>Target position setting</td><td>Mechanical stopper (including a shock absorber)</td><td>[1] Position number specification mode
Enter a coordinate in the [Position] field of the position table. You can key in a desired coordinate using the number keys on a PC (keyboard)/teaching pendant, or move the actuator to a desired position and then write the coordinate to the position table directly.
Example) Entries on a 400-mm actuator
<table>
<tr><th>Position No.</th><th>Position</th></tr>
<tr><td>0</td><td>5 (mm)</td></tr>
<tr><td>1</td><td>400 (mm)</td></tr>
<tr><td>2</td><td>200 (mm)</td></tr>
</table>
[2] Numerical specification mode: Specify a desired value directly.</td></tr>
<tr><td>Target position detection</td><td>A reed switch or other external detection sensor is installed.</td><td>Whether or not the target position has been reached is determined based on the internal coordinate information received from the position detector (encoder).
Accordingly, no external detection sensor is required.</td></tr>
<tr><td>Speed setting</td><td>Adjusted using a speed controller.</td><td>[1] Enter a feed speed in the [Speed] field of the position table (in mm/sec).
Initially, the default speed has been set automatically.
[2] Specify a desired value directly.</td></tr>
<tr><td>Acceleration/ deceleration setting</td><td>In accordance with the load, air supply volume, and speed controller/electromagnetic valve performance.</td><td>[1] Enter an acceleration or deceleration in the [Acceleration] or [Deceleration] field of the position table (in units of 0.01 G).
Reference: 1 G = Gravitational acceleration that generates when the actuator drops freely.
Initially, the default acceleration and deceleration have been set automatically.
[2] Specify a desired value directly.
Since acceleration and deceleration can be set finely, you can define a gradual deceleration/acceleration curves.
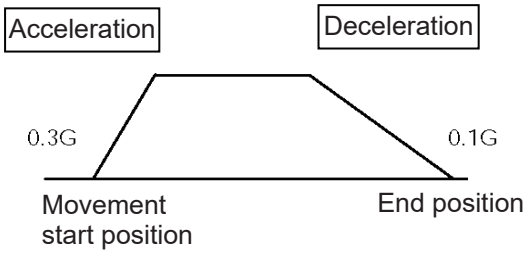

Larger acceleration/deceleration values set steeper curves, while smaller acceleration/deceleration values set more gradual curves.</td></tr>
</table>

Item	Air cylinder	This controller
Position check upon power on	Determined using a reed switch or other external detection sensor.	Immediately after the power has been turned on, the current position is indeterminable because no mechanical coordinates are stored in the controller. After the power is turned on, therefore, a home return command must always be issued to establish coordinates. 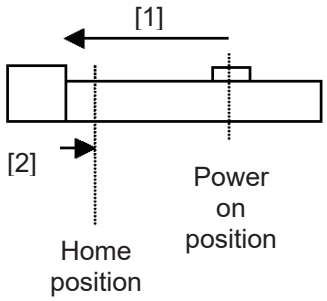 [1] The actuator moves toward the mechanical end on the motor side at the home return speed. [2] The actuator contacts the mechanical end and reverses its direction, moves to the home position, and then pauses. (Note)Make sure no obstacles are present in the home return path.

1.4 Meaning of the Model Number

ERC2-SA6C-I-PM-12-300-SE-S-NM

<Series name>

<Type>
Slider type
- SA6C
- SA7C

Rod type
- RA6C
- RA7C
- RGS6C
- RGS7C
- RGD6C
- RGD7C

<Encoder type>
I: Incremental

<Motor type>
PM: Pulse motor

<Options>
Blank: No option
B: With brake
NM: Reversed-home specification
FT: Foot bracket (Specified only for rod types.)

<Extension cable length>
Blank: No cable
P: 1 m
S: 3 m
M: 5 m
X□□: Length specification (Example) X08 = 8 m
R□□: Robot cable specification

<I/O signal pattern>
NP: PIO-NPN specification
PN: PIO-PNP specification
SE: SIO specification

<Stroke>
50 to 600 mm
(Standard lengths are multiples of 50 mm.)
(Example) 100 = 100 mm

<Ball screw lead>
16: 16 mm
12: 12 mm
8: 8 mm
6: 6 mm
4: 4 mm
3: 3 mm

1.5 Specifications

	Model	Stroke (mm) and maximum speed (mm/sec) (Note 1)												Payload capacity (Note		Rated acceleration	
														Horizontal	Vertical	Horizontal	Vertical
		50	100	150	200	250	300	350	400	450	500	550	600	(kg)	(kg)	(G)	(G)
Slider type	ERC2-SA6C-I-PM-12-□□□□	600											515	6~2	1.5~1	0.3	0.2
	ERC2-SA6C-I-PM-6-□□□□	300											255	12	3~2.5	0.3	0.2
	ERC2-SA6C-I-PM-3-□□□□	150											125	12	6~4	0.2	0.2
	ERC2-SA7C-I-PM-16-□□□□	450 (400)												10~2	2.5~0.5	0.3	0.2
	ERC2-SA7C-I-PM-8-□□□□	250												20~3.5	5~0.5	0.3	0.2
	ERC2-SA7C-I-PM-4-□□□□	125												20	10~2	0.2	0.2
Rod type	ERC2-RA6C-I-PM-12-□□□□	600					500							25~2.5	4.5~0.5	0.3	0.2
	ERC2-RA6C-I-PM-6-□□□□	300					250							40~12	12~2.5	0.3	0.2
	ERC2-RA6C-I-PM-3-□□□□	150					125							40	18~4	0.2	0.2
	ERC2-RA7C-I-PM-16-□□□□	450 (400)												40~2	5~0.5	0.3	0.2
	ERC2-RA7C-I-PM-8-□□□□	250 (200)												50~3.5	17.5~1	0.3	0.2
	ERC2-RA7C-I-PM-4-□□□□	125												55~25	25~2	0.2	0.2
	ERC2-RGS6C-I-PM-12-□□□□	600					500							25~2.5	4.5~0.5	0.3	0.2
	ERC2-RGS6C-I-PM-6-□□□□	300					250							40~12	12~2.5	0.3	0.2
	ERC2-RGS6C-I-PM-3-□□□□	150					125							40	18~4	0.2	0.2
	ERC2-RGS7C-I-PM-16-□□□□	500												40~2	5~0.5	0.3	0.2
	ERC2-RGS7C-I-PM-8-□□□□	250												50~3.5	17.5~1	0.3	0.2
	ERC2-RGS7C-I-PM-4-□□□□	125												55~25	25~2	0.2	0.2
	ERC2-RGD6C-I-PM-12-□□□□	600					500							25~2.5	4.5~0.5	0.3	0.2
	ERC2-RGD6C-I-PM-6-□□□□	300					250							40~12	12~2.5	0.3	0.2
	ERC2-RGD6C-I-PM-3-□□□□	150					125							40	18~4	0.2	0.2
	ERC2-RGD7C-I-PM-16-□□□□	500												40~2	5~0.5	0.3	0.2
	ERC2-RGD7C-I-PM-8-□□□□	250												50~3.5	17.5~1	0.3	0.2
	ERC2-RGD7C-I-PM-4-□□□□	125												55~25	25~2	0.2	0.2

(Note 1) The figures in blank bands indicate the maximum speeds for respective strokes. The maximum speeds during vertical operation are shown in parentheses.

(Note 2) The payload capacity is based on operation at the rated acceleration. In the case of a guide type, find the applicable payload capacity in the above table and subtract the weight of the guide to obtain the effective payload capacity.

1.5.1 Correlation Diagrams of Speed and Payload Capacity – Slider Type

	Horizontal installation	Vertical installation
High-speed type	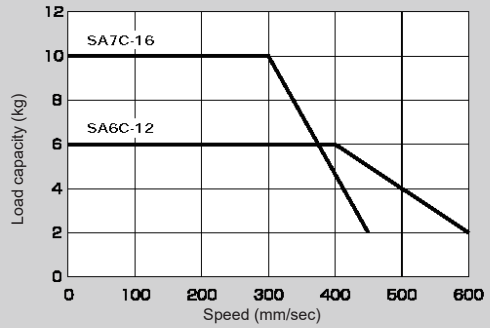	
Medium-speed type	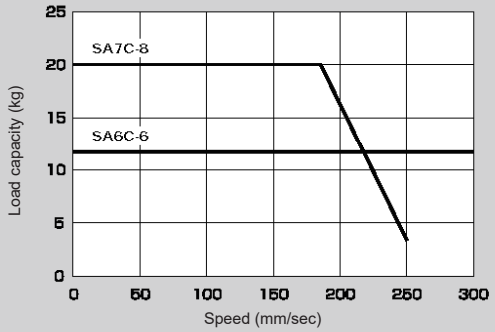	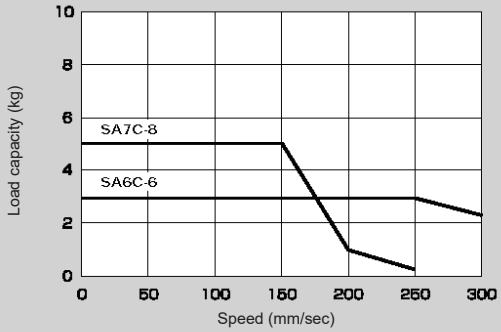
Low-speed type	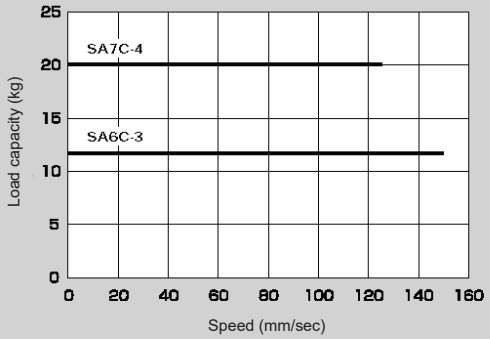	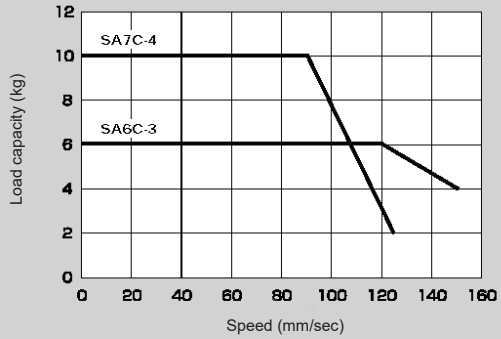

(Note) In the above graphs, the number after each type name indicates the lead.

1.5.2 Correlation Diagrams of Speed and Payload Capacity – Rod Type

Horizontal installation | **Vertical installation**

High-speed type

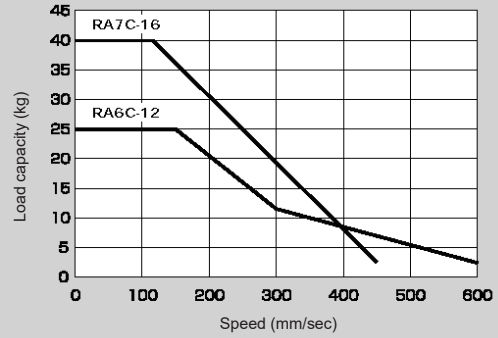

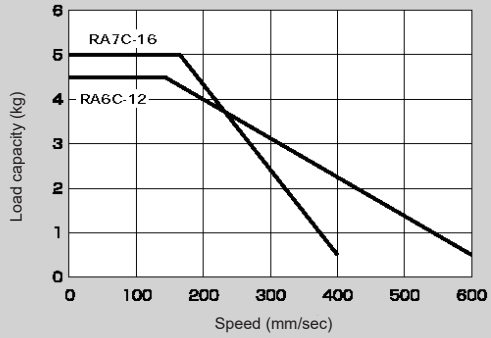

Medium-speed type

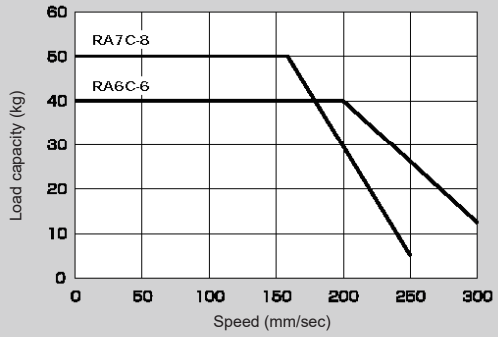

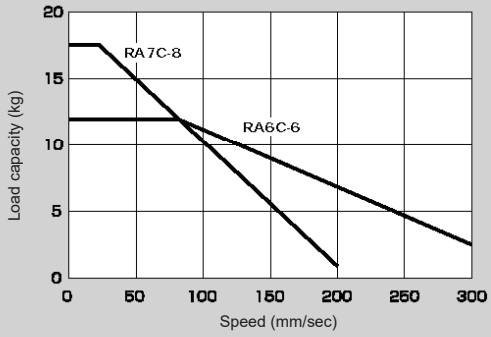

Low-speed type

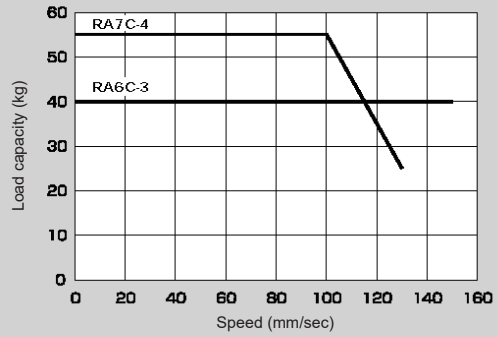

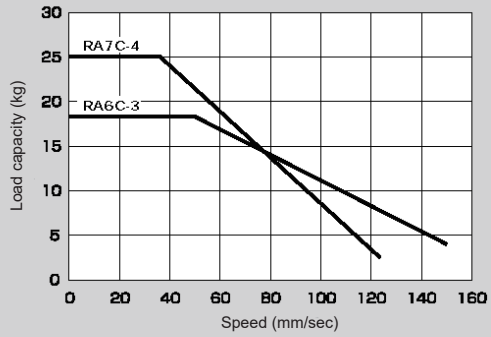

(Note) In the above graphs, the number after each type name indicates the lead.

⚠ Load Applied to the Actuator

(1) Slider type

- Keep the load applied to the slider below the value stated in the applicable specification item.
  In particular, pay attention to the moment applied to the slider, allowable overhang length and payload capacity.
- If the slider is used in an overhang application with the load overhanging in the Y-axis direction, keep moments Ma and Mc to one-half the rated moment or less to prevent the base from deforming.

(2) Rod type

- Keep the load applied to the rod below the value specified in the catalog.
- Make sure the center of the rod axis corresponds to the moving direction of the load.

- Application of lateral load may cause an actuator damage or breakdown.
- If the rod is to be subjected to lateral load, provide a guide or other support in the moving direction of the load.

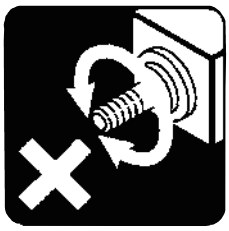

- Do not apply rotating torque to the rod (slide shaft).
  * It will result in internal damages.

When tightening the nut at the end of the rod, secure the rod using a wrench of size 13 (RA6C type) or 17 (RA7C type).

1.5.3 The sound pressure level of this product does not exceed 70 dB.

1.6 Warranty

1 Warranty Period

One of the following periods, whichever is shorter:
- 18 months after shipment from our company
- 12 months after delivery to the specified location

2 Scope of Warranty

Our products are covered by warranty when all of the following conditions are met. Faulty products covered by warranty will be replaced or repaired free of charge:

(1) The breakdown or problem in question pertains to our product as delivered by us or our authorized dealer.

(2) The breakdown or problem in question occurred during the warranty period.

(3) The breakdown or problem in question occurred while the product was in use for an appropriate purpose under the conditions and environment of use specified in the operation manual and catalog.

(4) The breakdown of problem in question was caused by a specification defect or problem, or by a quality issue with our product.

Note that breakdowns due to any of the following reasons are excluded from the scope of warranty:
[1] Anything other than our product
[2] Modification or repair performed by a party other than us (unless we have approved such modification or repair)
[3] Anything that could not be easily predicted with the level of science and technology available at the time of shipment from our company
[4] A natural disaster, man-made disaster, incident or accident for which we are not liable
[5] Natural fading of paint or other symptoms of aging
[6] Wear, depletion or other expected result of use
[7] Operation noise, vibration or other subjective sensation not affecting function or maintenance

Note that the warranty only covers our product as delivered and that any secondary loss arising from a breakdown of our product is excluded from the scope of warranty.

3 Honoring the Warranty

As a rule, the product must be brought to us for repair under warranty.

4 Limited Liability

(1) We shall assume no liability for any special damage, consequential loss or passive loss such as a loss of expected profit arising from or in connection with our product.
(2) We shall not be liable for any program or control method created by the customer to operate our product or for the result of such program or control method.

5 Conditions of Conformance with Applicable Standards/Regulations, Etc., and Applications

(1) If our product is combined with another product or any system, device, etc., used by the customer, the customer must first check the applicable standards, regulations and/or rules. The customer is also responsible for confirming that such combination with our product conforms to the applicable standards, etc. In such a case we will not be liable for the conformance of our product with the applicable standards, etc.

(2) Our product is for general industrial use. It is not intended or designed for the applications specified below, which require a high level of safety. Accordingly, as a rule our product cannot be used in these applications. Contact us if you must use our product for any of these applications:

[1] Medical equipment pertaining to maintenance or management of human life or health
[2] A mechanism or mechanical equipment intended to move or transport people (such as a vehicle, railway facility or aviation facility)
[3] Important safety parts of mechanical equipment (such as safety devices)
[4] Equipment used to handle cultural assets, art or other irreplaceable items

(3) Contact us at the earliest opportunity if our product is to be used in any condition or environment that differs from what is specified in the catalog or operation manual.

6 Other Items Excluded from Warranty

The price of the product delivered to you does not include expenses associated with programming, the dispatch of engineers, etc. Accordingly, a separate fee will be charged in the following cases even during the warranty period:

[1] Guidance for installation/adjustment and witnessing of test operation
[2] Maintenance and inspection
[3] Technical guidance and education on operating/wiring methods, etc.
[4] Technical guidance and education on programming and other items related to programs

1.7 Transportation and Handling

1.7.1 Handling before Unpacking

Exercise due caution when transporting or handling the box containing the actuator, by not applying impact on the box as a result of collision or dropping.

- If the box is heavy, one person should not carry it by himself.
- Place the box in a level surface.
- Do not step on the box.
- Do not place on the box any heavy object that may cause the box to deform or other object with a section where loads will concentrate.

1.7.2 Handling after Unpacking

Once removed out of the box, hold the actuator by the frame if it is a rod type, or by the base if it is a slider type.

- When carrying the actuator, be careful not to allow it to collide with other objects. In particular, pay attention to the front bracket, motor bracket and motor cover.
- Do not exert excessive force on each part of the actuator. In particular, pay attention to the motor cover and cables.
- When unpacking, exercise due caution not to let the actuator drop and sustain damage to its mechanism.
- If the actuator is damaged during the shipment or any of the items is found missing, please contact IAI's Technical Support immediately.

Supplement) Refer to 2.1, "Name of Each Part," for the name of each part of the actuator.

1.8 Installation Environment and Noise Elimination

Pay due attention to the installation environment of the controller.

1.8.1 Installation Environment

The installation environment must satisfy the following conditions:

No.	Use environment/condition
[1]	Not exposed to direct sunlight.
[2]	The actuator is not subject to irradiated heat from a large heat source, such as a heat treatment furnace.
[3]	Ambient temperature of 0 to 40°C.
[4]	Humidity of 85% or less without condensation.
[5]	Not exposed to corrosive or flammable gases.
[6]	Normal environment for assembly and operation not subject to significant dust.
[7]	Not exposed to oil mist or cutting fluid.
[8]	Not subject to vibration exceeding 0.3 G.
[9]	Not exposed to strong electromagnetic waves, ultraviolet light or radiation.
[10]	Chemical resistance is not considered at all in the design of this product.
[11]	The actuator and cables are not subject to electrical noise.

In general, the installation environment shall be such that the operator can work without wearing any protective gears.

1.8.2 Storage Environment

The storage environment shall conform to the installation environment, but special caution is required to prevent condensation if the actuator is to be stored for a long period of time.
Unless otherwise specified, the actuator is shipped without any desiccating agent placed in the box. If the actuator is to be stored in an environment subject to condensation, provide a non-condensing measure from outside the box or directly inside the box.
The actuator is designed to withstand storage temperatures of up to 60°C for a short period of time. If the storage period will extend beyond one month, however, keep the storage temperature below 50°C.

1.8.3 Power Supply

The control/motor-drive power supply specification is 24 VDC ± 10% (2 A max).

1.8.4 Noise Elimination

This section explains how to eliminate noise in the use of the controller.

(1) Wiring and power supply

[1] Provide a dedicated class D grounding using a wire with a size of 0.75 mm^2 or larger.

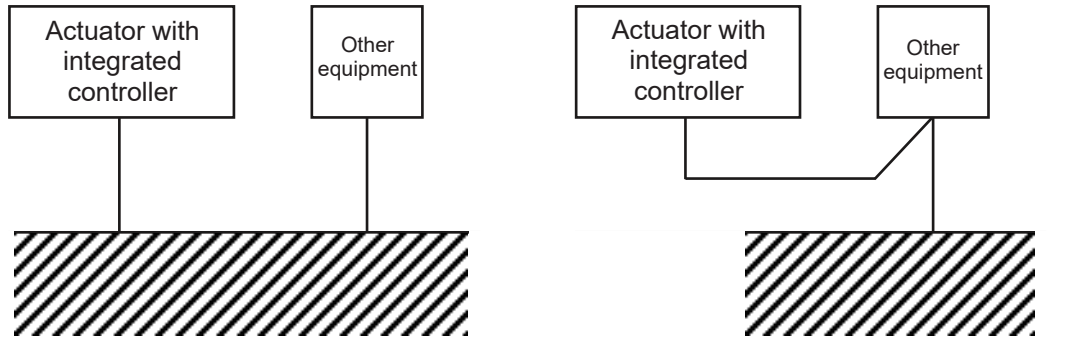

Class D grounding Good Avoid this grounding method.

[2] Precautions regarding wiring method

Wire extension cables separately from high-power lines for power circuits, etc. (Do not bundle them together or place them in the same cable duct.)

(2) Noise sources and elimination
Among the numerous noise sources, solenoid valves, magnet switches and relays are of particular concern when building a system. Noise from these sources can be eliminated by implementing the measures specified below.

[1] AC solenoid valves, magnet switches and relays

Measure: Install a surge absorber in parallel with the coil.

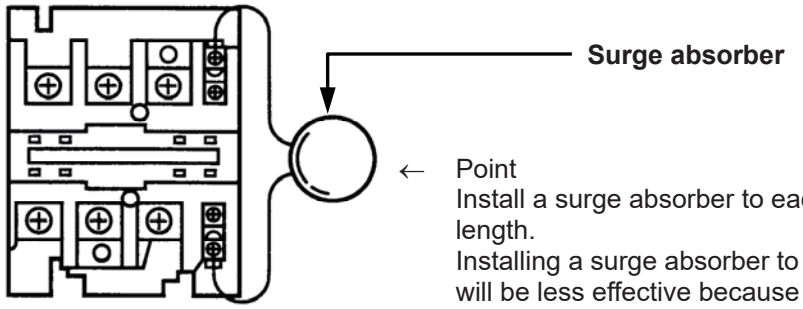

← Point
Install a surge absorber to each coil over a minimum wiring length.
Installing a surge absorber to the terminal block or other part will be less effective because of a longer distance from the coil.

[2] DC solenoid valves, magnet switches and relays

Measure: Install a diode in parallel with the coil. Determine the diode capacity in accordance with the load capacity.

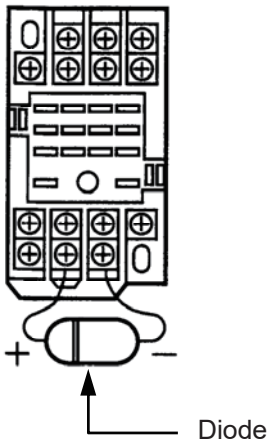

In a DC circuit, connecting a diode in reverse polarity will damage the diode, internal parts of the controller and/or DC power supply, so exercise due caution.

1.9 Cabling

- When storing a extension cable in a moving wiring duct, use a robot cable.
- In an application where the cable cannot be fixed, keep the cable from receiving a deflecting load exceeding its own weight, use a self-standing cable hose, provide a large bending radius along the wiring path, or provide other measure to minimize the load applied to the cable.
- Do not cut the cable for the purpose of extension, length reduction or reconnection.

If you intend to change the cable layout, please consult IAI.

Prohibitions/Notes on Handling Cables

When designing an application system using this actuator, incorrect wiring or connection of each cable may cause unexpected problems such as a disconnected cable or poor contact, or even a runaway system. This section explains prohibited handling of cables. Read the information carefully to connect the cables properly.

1. Do not let the cable flex at a single point.

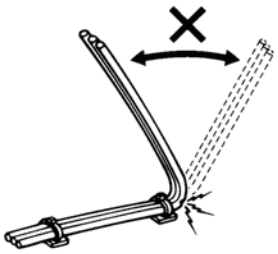

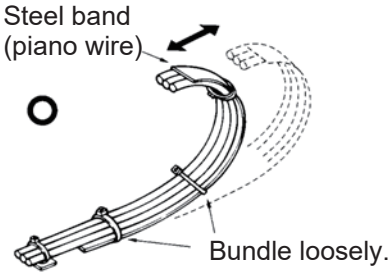

2. Do not let the cable bend, kink or twist.

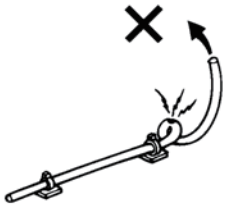

3. Do not pull the cable with a strong force.

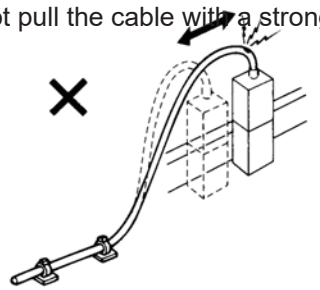

4. Do not let the cable receive a turning force at a single point.

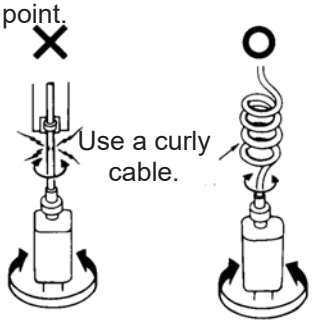

5. When fixing the cable, provide a moderate slack and do not tension it too tight.

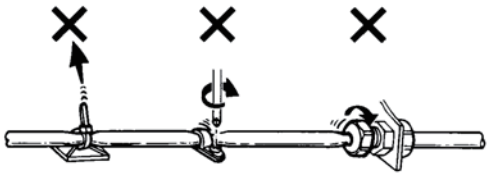

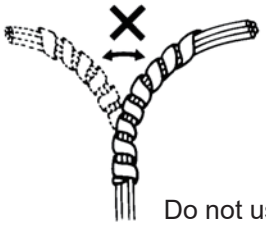

Do not use a spiral tube where the cable flexes frequently.

6. Do not pinch, drop a heavy object onto or cut the cable.

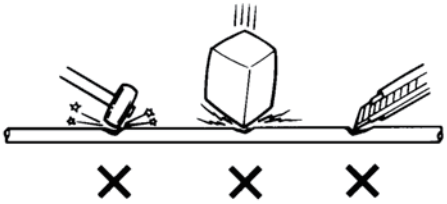

7. Notes on use of cable carrier

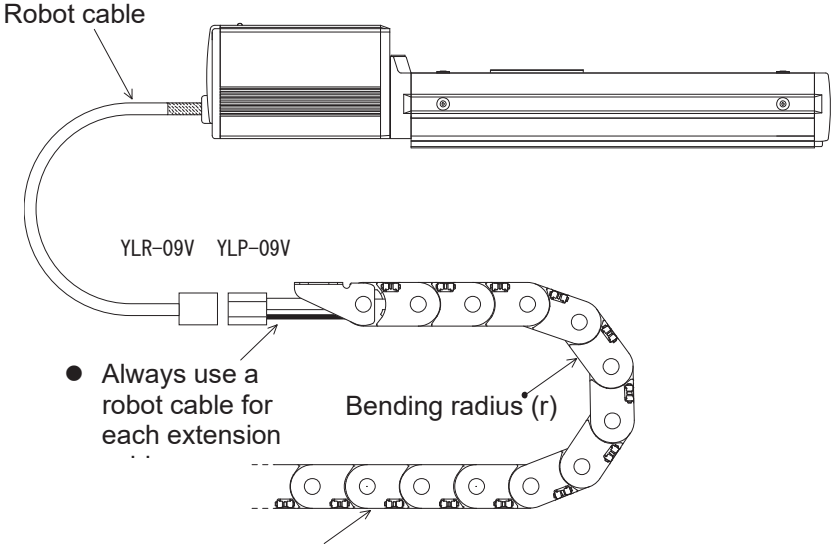

- Use a cable carrier with a bending radius (r) of 50 mm or more.

- PIO line, communication line, power and driving lines are to be put separately from each other and do not tie them together. Arrange so that such lines are independently routed in the duct.

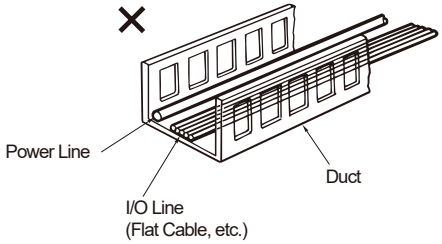

Follow the instructions below when using a cable carrier.

- If there is an indication to the cable for the space factor in a cable carrier, refer to the wiring instruction given by the supplier when storing the cable in the cable carrier.
- Avoid the cables to get twined or twisted in the cable carrier, and also to have the cables move freely and do not tie them up. (Avoid tension being applied when the cables are bent.)
  Do not pile up cables. It may cause faster abrasion of the sheaths or cable breakage.

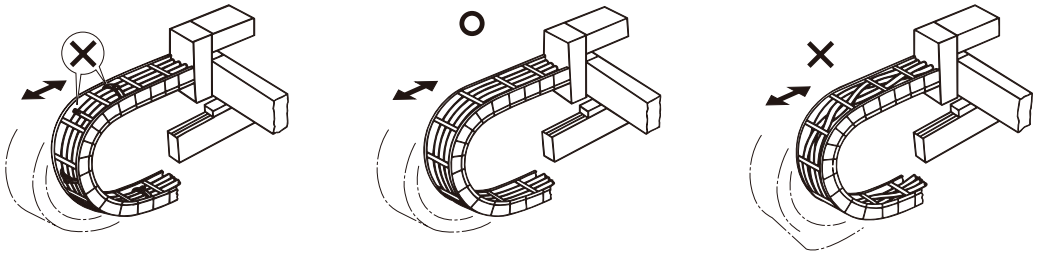

2. Installation

2.1 Name of Each Part

2.1.1 Slider Type (SA6C/SA7C)

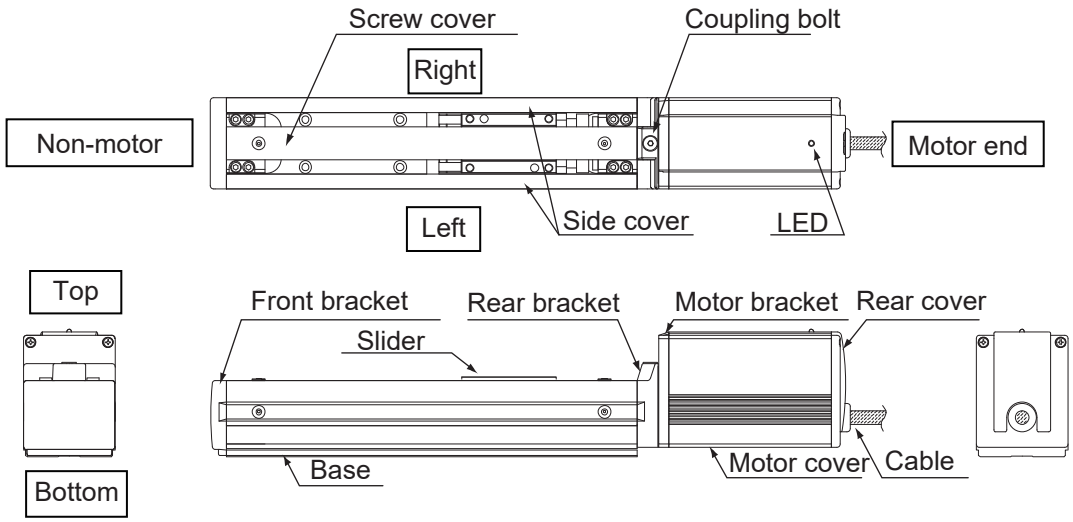

2.1.2 Rod Type (RA6C/RA7C)

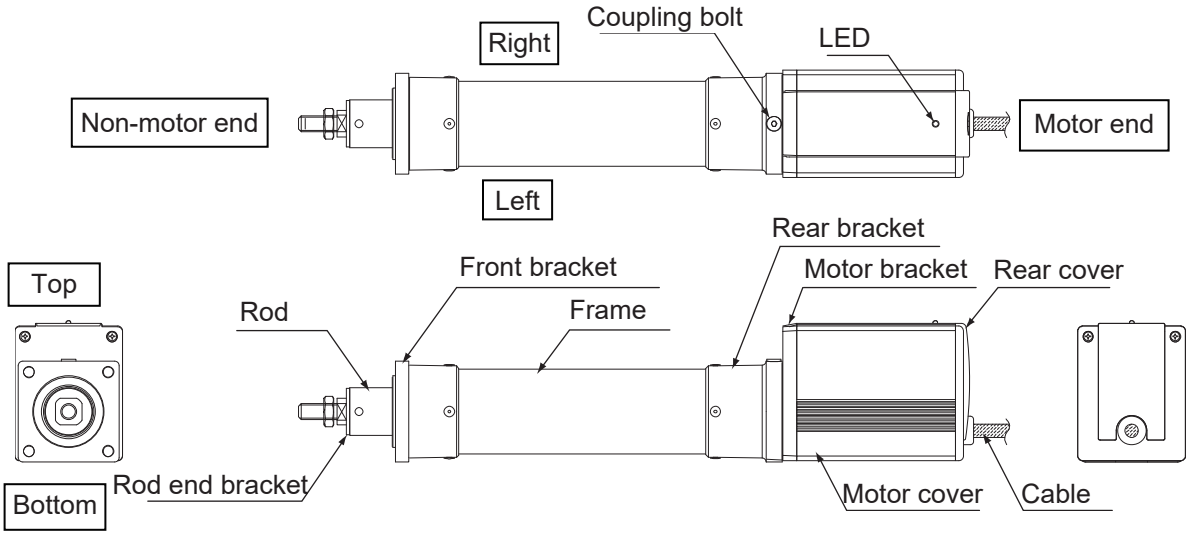

2.1.3 (1) Rod Type with a Single Guide (RGS6C/RGS7C)

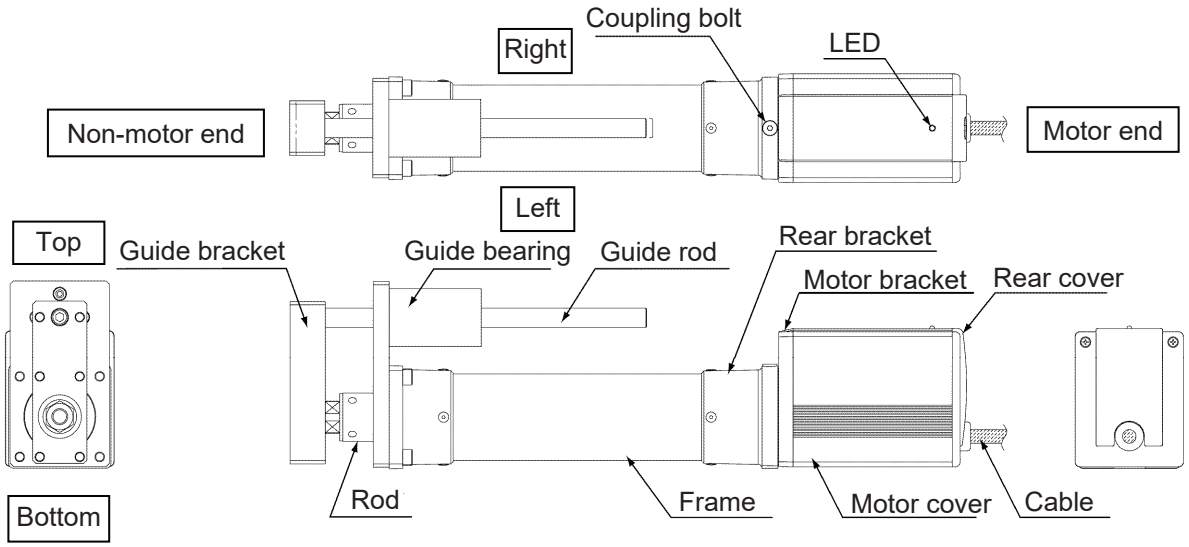

(2) Rod Type with Double Guides (RGD6C/RGD7C)

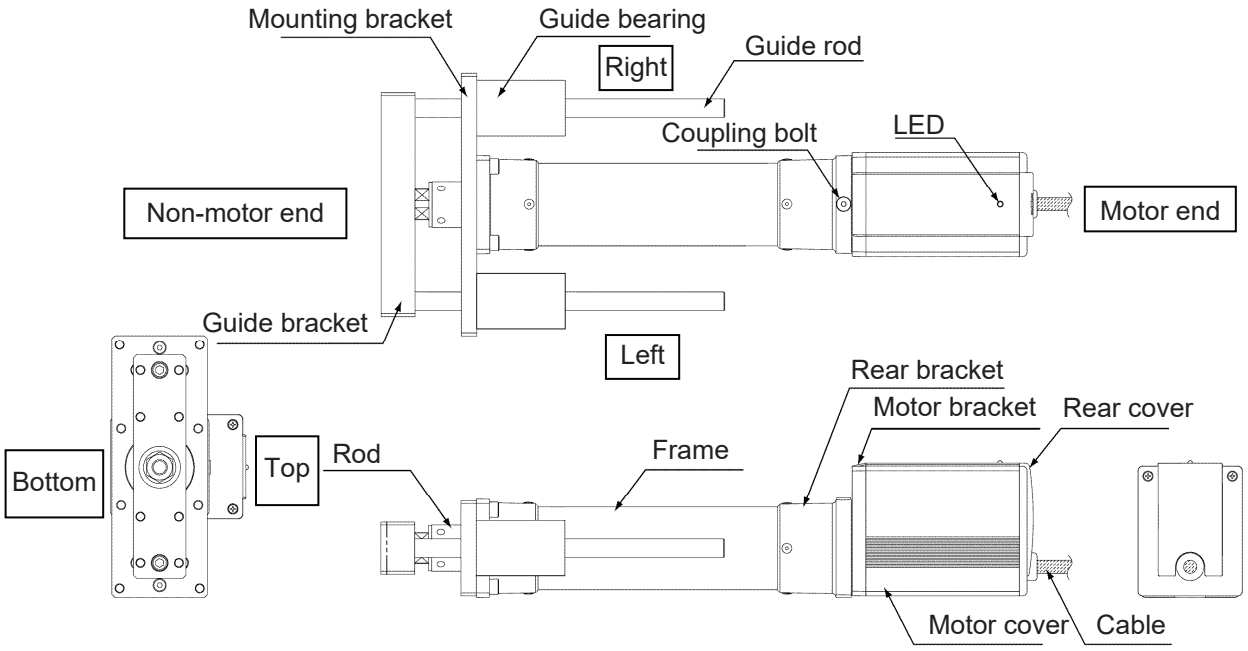

2.2 Installation

2.2.1 Slider Type

- Installing the actuator

The actuator-mounting surface must be a machined surface or have an equivalent flatness.

The side and bottom faces of the actuator base are parallel with the guides. If high slide precision is required, install the actuator by using these surfaces as references.

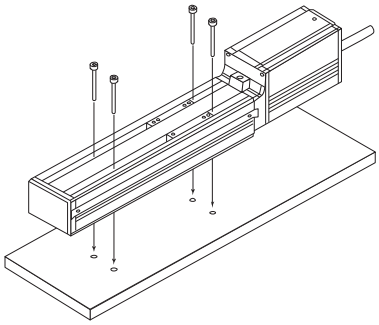

Slider type

Install the actuator in the mounting holes provided in the base. Secure the actuator in place using M4 hex cap bolts.

(Note) Reduced flatness due to installation of an overhang load will cause the base to deform and inhibit smooth movement of the slider. If the slider movement becomes heavier on the motor end or the slider begins generating noise, correct the flatness. Otherwise, the slider mechanism may end its life prematurely.

2.2.2 Rod Type

A rod-type actuator can be installed in the following two ways:

- Affixing with a flange

Install the actuator by tightening from the motor end side with hex cap bolts using the holes provided in the flange.

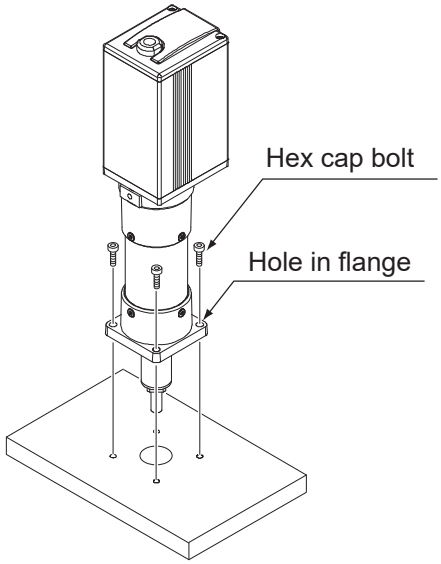

⚠ Caution: If the actuator is installed horizontally, exercise caution not to let the actuator receive excessive forces.

Flange tightening bolts

Model	Nominal thread size	Tightening torque
RA6C	M5	3.4 N·m (0.35 kgf·m)
RA7C	M6	5.4 N·m (0.55 kgf·m)

- Affixing through holes in a flange

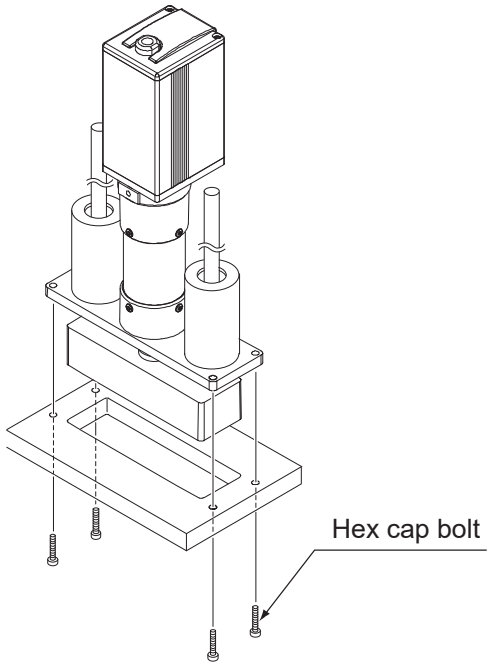

⚠ Caution: If the actuator is installed horizontally, exercise caution not to let the actuator receive excessive forces.

Flange tightening bolts

Model	Nominal thread size	Tightening torque
RGD6C	M5	Steel bolt-bearing surface: 7.3 N-m Aluminum bolt-bearing surface: 3.4 N-m
RGD7C	M6	Steel bolt-bearing surface: 12.3 N-m Aluminum bolt-bearing surface: 5.4 N-m

- Affixing with foot brackets (optional)

If optional foot brackets are used, install the foot brackets using hex cap bolts.

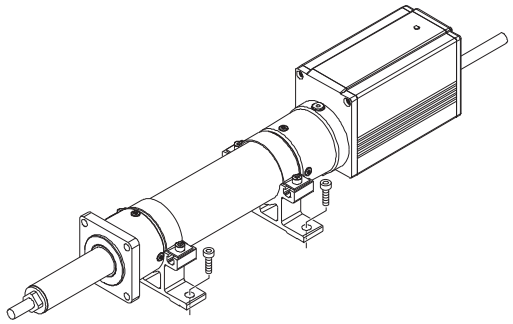

Foot-bracket tightening bolts

Model	Nominal thread size	Tightening torque
RA6C RGS6C RGD6C	M6	5.4 N·m (0.55 kgf-m)
RA7C RGS7C RGD7C	M8	11.5 N·m (1.17 kgf-m)

2.2.3 Installing the Load

- Slider Type

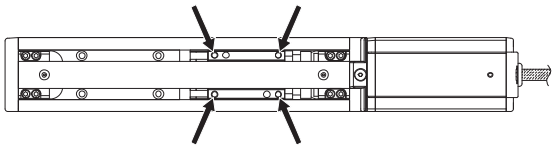

Four tapped holes are provided in the slider, so affix the load using these holes (indicated by arrows in the figure shown to the left).

Type	Slider mounting hole
SA6C, SA7C	M5, depth 9 mm

Nominal thread size	Tightening torque	
	Bolt bearing surface: steel	Bolt bearing surface: aluminum
M5	7.3 N·m (0.74 kgf·m)	3.4 N·m (0.35 kgf·m)

The affixing method of the load shall conform to the installation method of the actuator.

In an application where the actuator is moved with the slider fixed, install the load using the tapped holes in the slider in the same manner.

The slider has two reamed holes. Use these holes when high repeatability is required for load installation/removal. When fine-tuning the squareness of the load, etc., make adjustment by using one of these two reamed holes in the slider.

Type	Reamed hole
SA6C, SA7C	∅5, H10, depth 10 mm

- Rod Type

A bolt is attached on the rod end bracket, so use this bolt to affix the load. (Use the supplied nut, if necessary.)

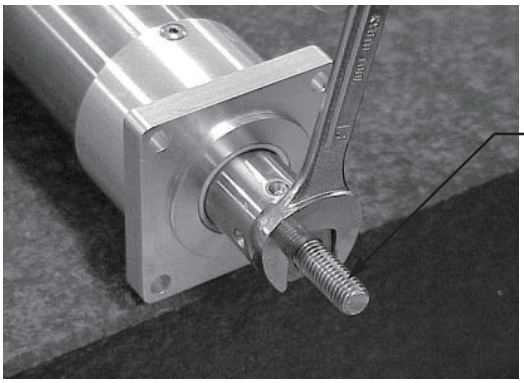

Rod end bracket

Model	Rod end bracket
RA6C	M8, length 18 mm
RA7C	M10, length 21 mm

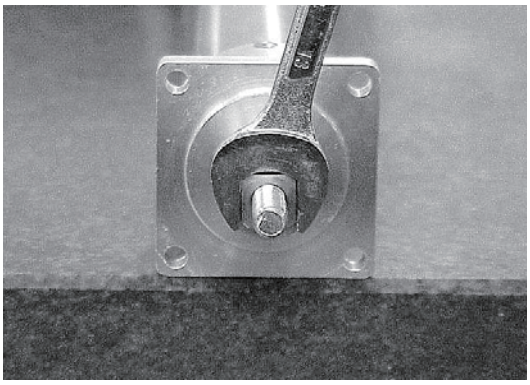

Note) Apply a spanner wrench at the rod end bracket to prevent the rod from receiving any rotating moment when the load is installed.
Applying excessive rotating moment to the rod may damage the rod.
RA6C: Width across flats 13 mm
RA7C: Width across flats 17 mm

- Rod type with a guide(s)

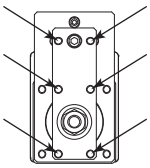

Single guide

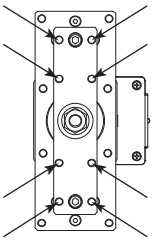

Double guides

Tapped holes are provided in the guide bracket. Affix the work using these holes (shown by the arrows in the figures at left).

Model	Nominal thread size
RGS6C	M5
RGD6C	M5
RGS7C	M6
RGD7C	M6

Nominal thread size	Tightening torque	
	Bolt bearing surface: steel	Bolt bearing surface: aluminum
M5	7.3 N·m (0.74 kgf-m)	3.4 N·m (0.35 kgf-m)
M6	12.3 N·m (1.26 kgf-m)	5.4 N·m (0.55 kgf-m)

3. Electrical Specifications

3.1 Controller

Specification item		Description
Number of controlled axes		1 axis/unit
Supply voltage		24 VDC ±10%
Supply current		2 A max.
Control method		Weak field-magnet vector control
Positioning command		Position number specification, numerical specification, simple numerical/position number specification
Position number		Maximum 64 points
Backup memory		Position table data and parameters are saved in nonvolatile memory. Serial EEPROM can be rewritten 100,000 times.
PIO		None
LED indicator		Servo ON (green)/Alarm (red)
Encoder	Method	Magnetic type
	Signals	0 to 5 V, phases A/B, incremental
	Resolution	200 pulses/rev (multiplied by 4 in an external circuit)
Communication		RS485 1 channel (terminated externally)
Communication protocol		Modbus/RTU, Modbus/ASCII
Electromagnetic brake		A drive circuit is provided. 24 VDC ± 10%, 0.15 A max.
Electromagnetic brake Release		The user must provide a selector switch. (Current consumption: 0.15 A max.)
Extension cable length		10 m or less
Communication cable length		100 m max. in total cable length
Isolation strength		500 VDC, 10 MΩ
Environment	Ambient operating temperature	0 to 40°C
	Ambient operating humidity	85%RH or less (non-condensing)
	Operating ambience	Free from corrosive gases, flammable gases, oil mist, and dust.
	Storage temperature	-10 to 65°C (non-freezing)
	Storage humidity	90%RH or less (non-condensing)
	Vibration resistance	10 to 57 Hz in XYZ directions / Pulsating amplitude: 0.035 mm (continuous), 0.075 mm (intermittent)
Protection class		IP20
Weight		Approx. 25 g
External dimensions		109 W x 40 D (mm), printed circuit board

3.2 Input/Output Interfaces

Connector pin No.	Signal name	Description
1	SGA	RS485 serial communication
2	SGB	
3	5V	
4	GND	
5	24V	Control power, 24 V
6	BKR	Brake release (The brake is released when 24 V, 150 mA is supplied.)
7	MPI	Motor drive power, 24 V
8	GND	Control power, 0 V
9		Shield

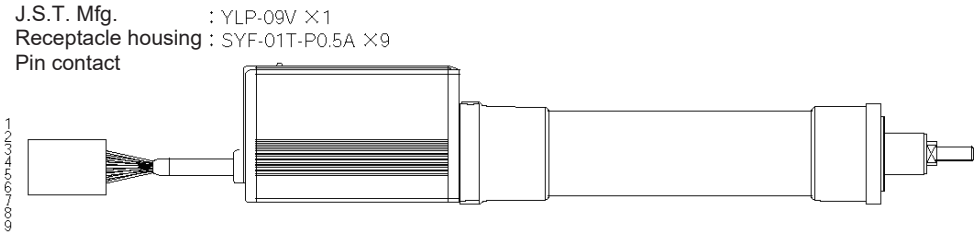

3.2.1 Extension Cable

This cable is a standard accessory of the controller.

(1) Power & I/O cable
(Model number: CB-ERC2-PWBIO***/CB-ERC2-PWBIO***-RB)

(Note) CB-ERC2-PWBIO***-RB indicates a robot cable.

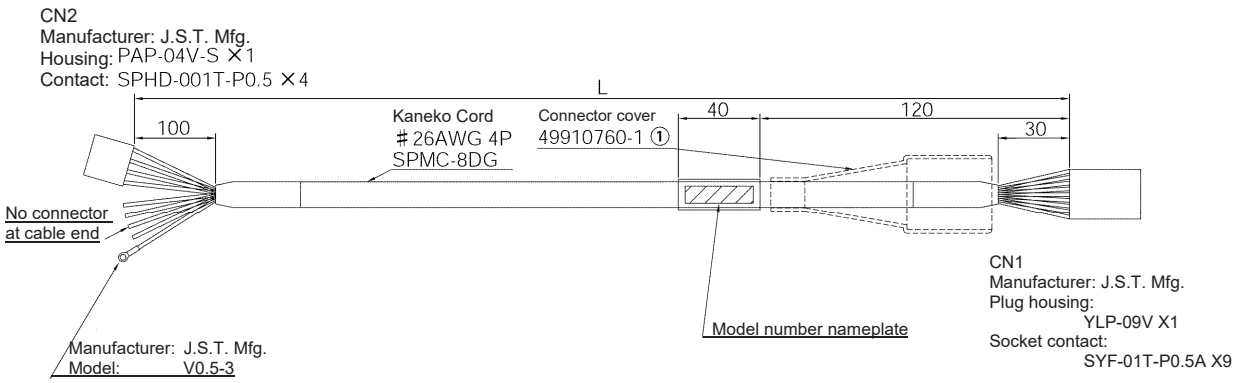

CN2

Wire	Color	Signal name	No.
AWG26	Orange	SGA	1
	Blue	SGB	2
	Brown	5V	3
	Green	GND	4

Note 1

CN1

No.	Signal name	Wire color: Standard cable	Wire color: Robot cable	Wire
1	SGA	Orange	Blue	AWG26
2	SGB	Blue	Yellow	
3	5V	Brown	Red	
4	GND	Green	Black	
5	Control power	Red	Purple	
6	Brake	Gray	Gray	
7	MPI	Yellow	Green	
8	GND	Black	Orange	
9	Shield	Shield	Shielded wire	Shielded wire

Note 2

(Note 1) Twisted pair
(Note 2) Ground

(2) Network connection cable (Model number: CB-ERC2-CTL001)

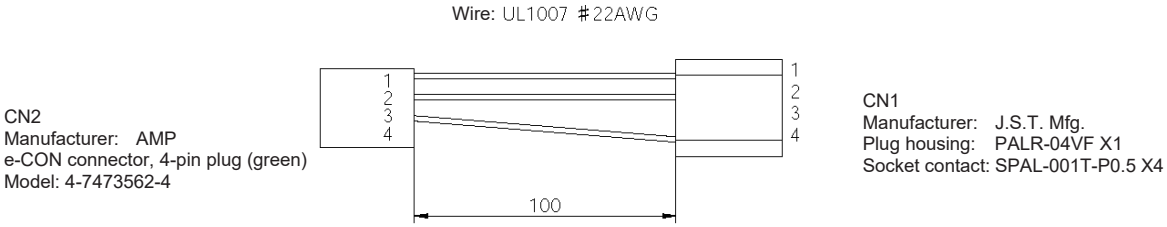

Wire	Color	Signal name	No.
CN2 AWG22	Orange	SGA	1
	Blue	SGB	2
	Green	GND	3
		NC	4

No.	Signal name	Color	Wire
1	SGA	Orange	CN1 AWG22
2	SGB	Blue	
3	5V		
4	GND	Green	

* This cable comes with the following parts:
- e-con connector x 1
- e-con connector (with terminal resistor) x 1
- 4-way junction x 1

3.3 SIO Converter (Optional)

Model number: RCB-TU-SIO-A (Vertical installation)
RCB-TU-SIO-B (Horizontal installation)

This unit is a RS232C-RS485 converter.
When multiple controllers are linked together, you can use the SIO converter to perform movement operations and edit parameters for all axes at the same time by connecting a teaching pendant to the mini-DIN, 8-pin connector on the converter.

- Explanation of functions

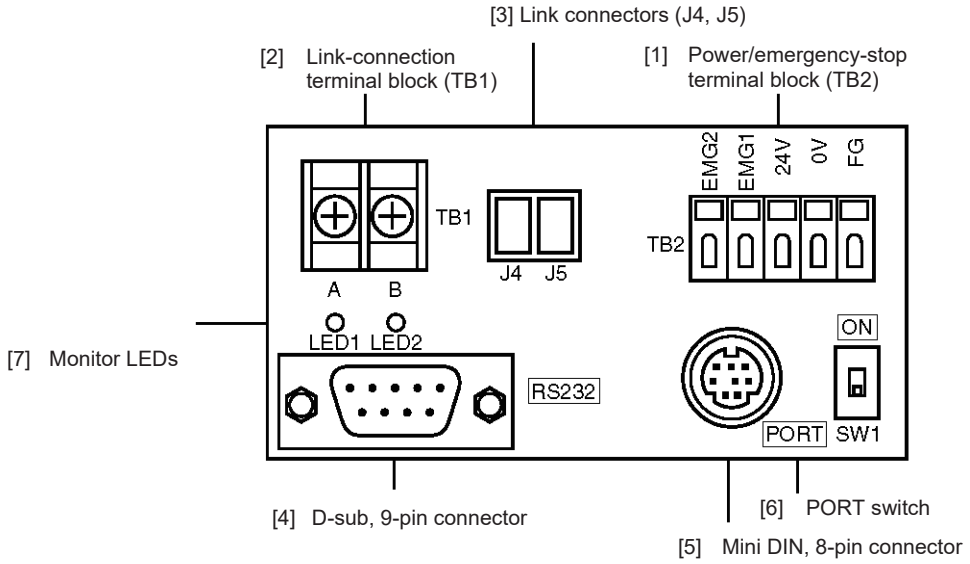

[1] Power/emergency-stop terminal block (TB2)

EMG1, EMG2	Provide a contact output for the emergency-stop switch on the teaching pendant (RCA-T/E). EMG1 and EMG2 connect to the emergency-stop switch on the teaching pendant when the PORT switch is ON, or are shorted when the PORT switch is OFF. These terminals comprise an interlock with a safety circuit provided by the user.
24V	Positive side of the 24-V power supply Power supply for the teaching pendant and conversion circuit Current consumption: 0.1 A max.
0V	Negative side of the 24-V power supply
FG	FG of the 24-V power supply

[2] Link-connection terminal block (TB1)
A connection port for linking the controller.
“A” on the left side connects to SGA (wire color: orange/red 1) in the extension cable.
“B” on the right side connects to SGB (wire color: orange/black 1) in the extension cable.
(Note) Be sure to use twisted pair wires for the above two lines (SGA/SGB).

[3] Link connectors (J4, J5)
e-con connection ports for linking the controller. These ports accept an optional link cable (CB-RCB-CTL002) directly. Note that J4 and J5 provide connections for two axes only. To connect three or more axes, use the terminal block explained in [2].

[4] D-sub, 9-pin connector (RS232C)
A connection port with the PLC's communication module. You can also connect a PC here. For the communication cable, use a RS232C crossed cable as explained below.

[5] Mini DIN, 8-pin connector (RS485)
A connection port with the teaching pendant. For the communication cable, use the cable (with RS232C/RS485 converter) supplied with the PC software (RCM-101-MW).

[6] PORT switch
A switch for enabling/disabling the mini-DIN connector. Set this switch to ON when a device is connected to the mini-DIN connector, or OFF when no device is connected.

[7] Monitor LEDs
LED1 --- Lit when the controller is transmitting
LED2 --- Lit when the RS232 is transmitting

(Reference) Connection drawing of a RS232C crossed cable (generic brand)
SIO converter end

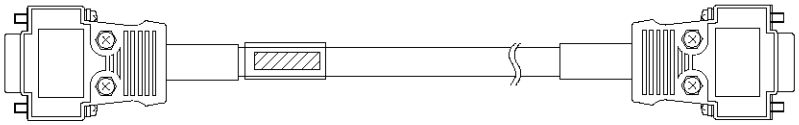

D-sub 9-pin, female

Signal	No
	1
RD	2
SD	3
DTR	4
SG	5
DSR	6
RS	7
CS	8
	9

No	Signal
1	
2	RD
3	SD
4	DTR
5	SG
6	DSR
7	RS
8	CS
9	

D-sub 9-pin

(PC: Female
PLC: Male)

4. Wiring

4.1 Basic Configuration with SIO Converter

Connect a teaching pendant, PC or PLC using a SIO converter (for RS232C/RS485 conversion), as shown below.

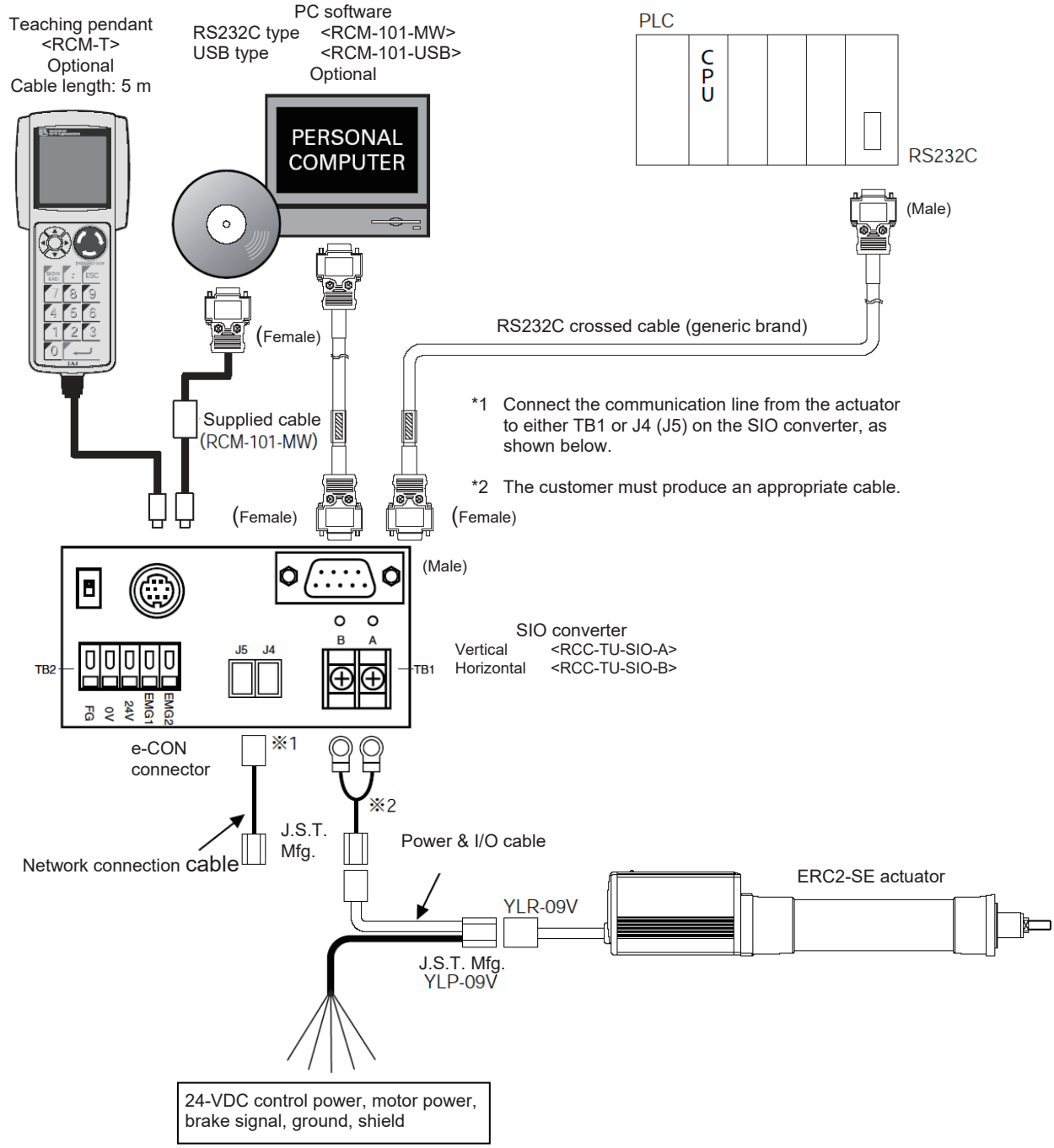

⚠ Caution: Do not connect any device to the mini-DIN connector and D-sub connector at the same time. If a device is connected to these connectors at the same time, a communication error (message level) will occur.

- Connection diagram

An example of serial communication connection, including an emergency stop circuit, is shown below.
Emergency stop is actuated by means of cutting off the motor drive power.

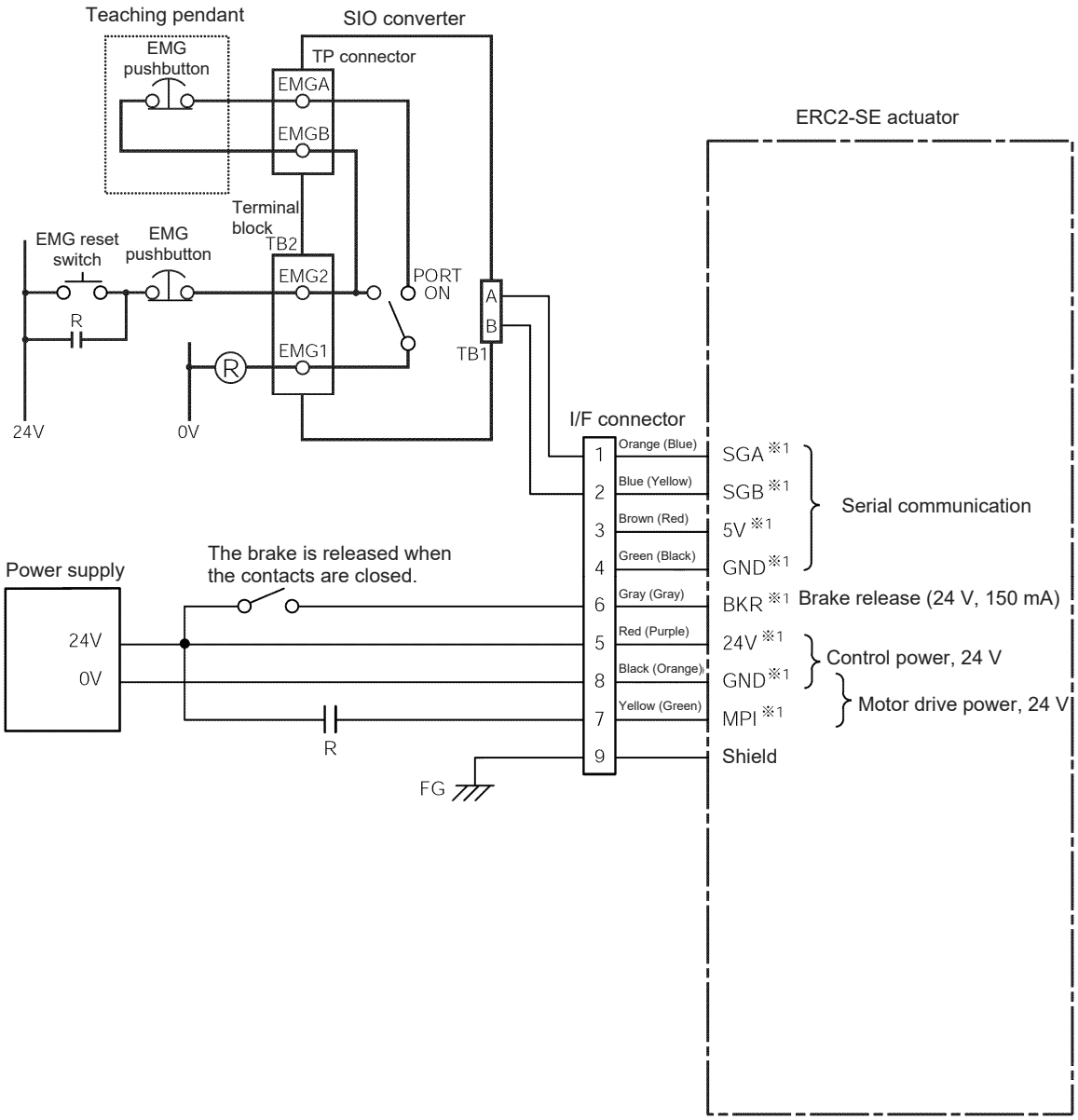

*1 The wire colors for standard cables and robot cables are different. The colors in parentheses are for robot cables.

4.1.1 SIO Communication Connection Using a Relay Terminal Block

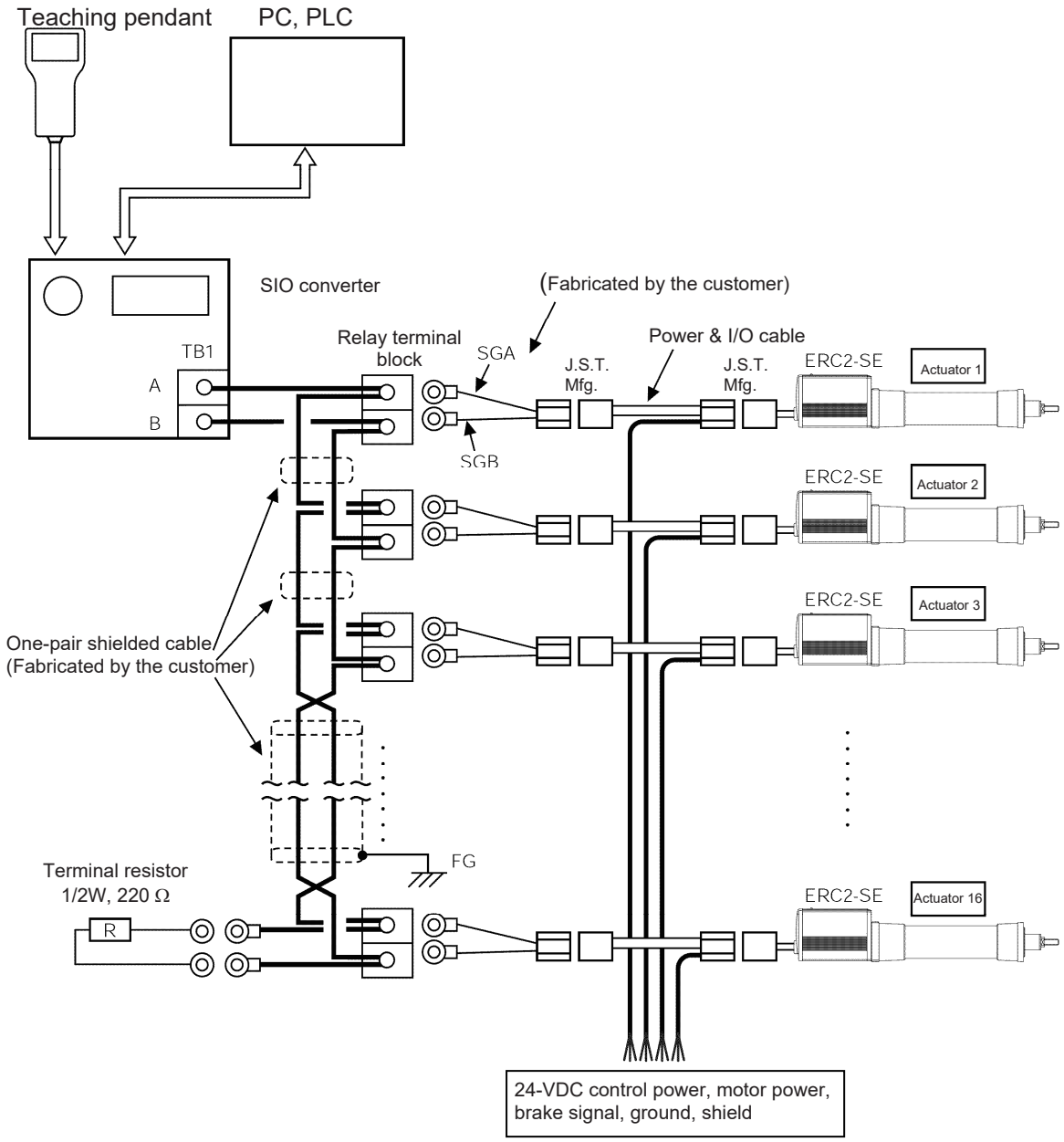

* The emergency stop circuit is the same as illustrated on the previous page.

(Note 1) If the total length of the communication cable is 10 m or longer and you experience communication errors, connect a terminal resistor to the last axis. (Note 2) If the actuators use different power supplies, align 0 [V] on all power supplies. (Note 3) Connect the shielded wire of each axis to FG. (Note 4) If the overall length of link cable exceeds 30 m, use wire of 22AWG or larger size.

4.1.2 SIO Communication Connection Using a 4-Way Junction

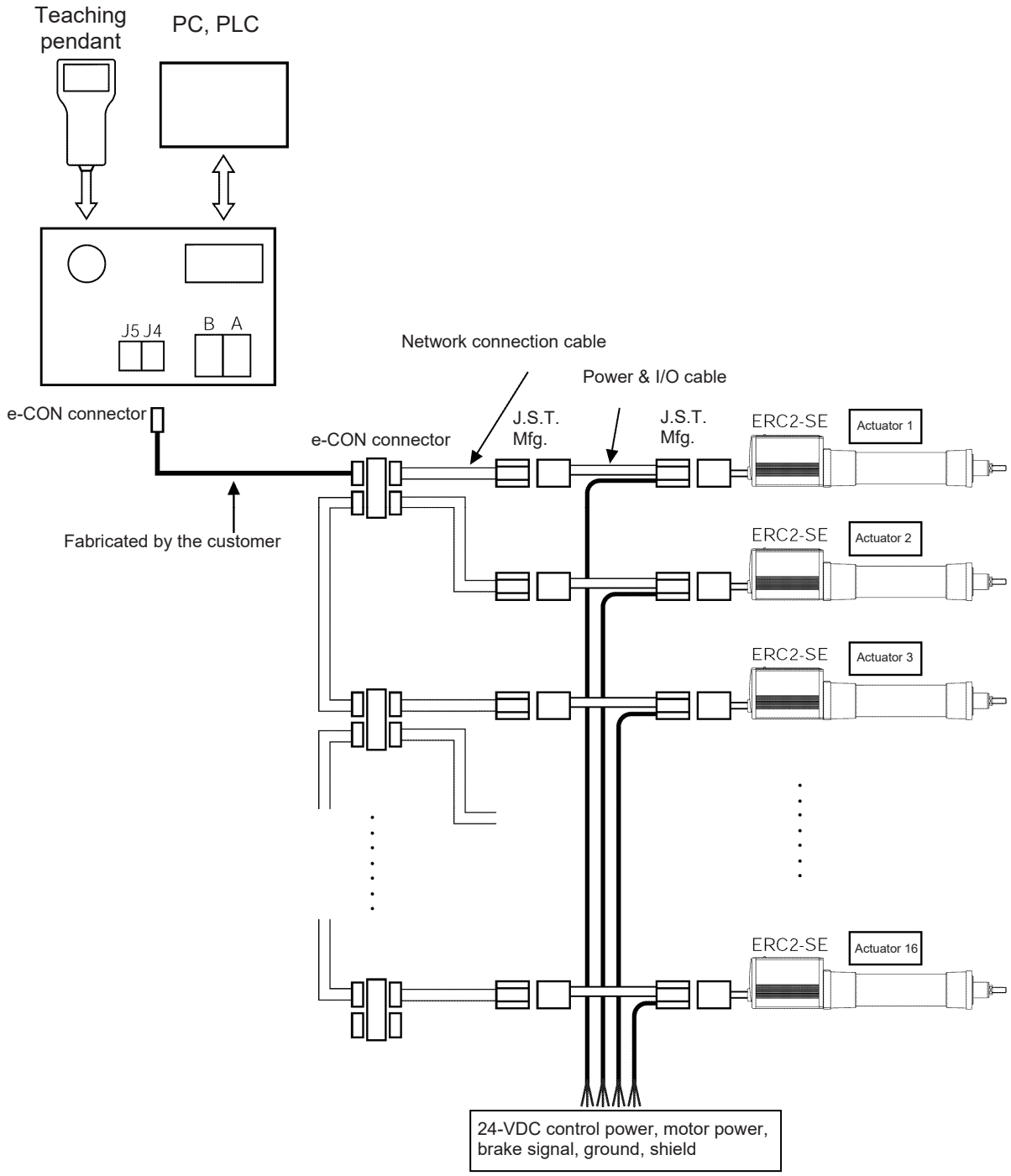

(Note 1)	If the total length of the communication cable is 10 m or longer and you experience communication errors, connect a terminal resistor to the last axis.
(Note 2)	If the actuators use different power supplies, align 0 [V] on all power supplies.
(Note 3)	The gateway unit power must be the same as 0 V of the ERC2 control power.
(Note 4)	Connect the shielded wire of each axis to FG.
(Note 5)	If the overall length of link cable exceeds 30 m, use wire of 22AWG or larger size.

4.1.3 Address Assignment

If multiple axes are connected, a slave number must be assigned to each axis so that the host can recognize the corresponding actuator.
Assign addresses in the setting screen of the teaching pendant or PC.

- Overview of operation on the PC
  [1] Open the main window → [2] Click **Setup (S)** → [3] Bring the cursor to **Controller Setup (C)** → [4] Bring the cursor to **Assign Address (N)** and click the mouse → [5] Enter an appropriate number in the address table.
- Overview of operation on the teaching pendant RCM-T
  [1] Open the User Adjustment screen → [2] Use the ▼ key to bring the cursor to **Address No.** → [3] Enter an appropriate address and press the ENTER key → [4] Enter “2” under **Adjustment No.** and press the ENTER key.
- Overview of operation on the simple teaching pendant RCM-E
  [1] Open the User Adjustment screen → [2] Press the ENTER key to open the screen showing **Address No.** → [3] Enter an appropriate address and press the ENTER key → [4] Enter “2” under **Adjustment No.** and press the ENTER key.

Refer to the operation manual for your teaching pendant or PC software for the specific operating procedure.

> ⚠ Caution: In the actual process of assigning addresses, the teaching pendant or PC and the target actuator must have a one-on-one link. Therefore, disconnect the communication cables (SGA/SGB) from other axes to tentatively provide a condition where not more than one axis is connected.

4.2 Configuration Using a Gateway Unit

4.2.1 SIO Communication Connection Using a Relay Terminal Block

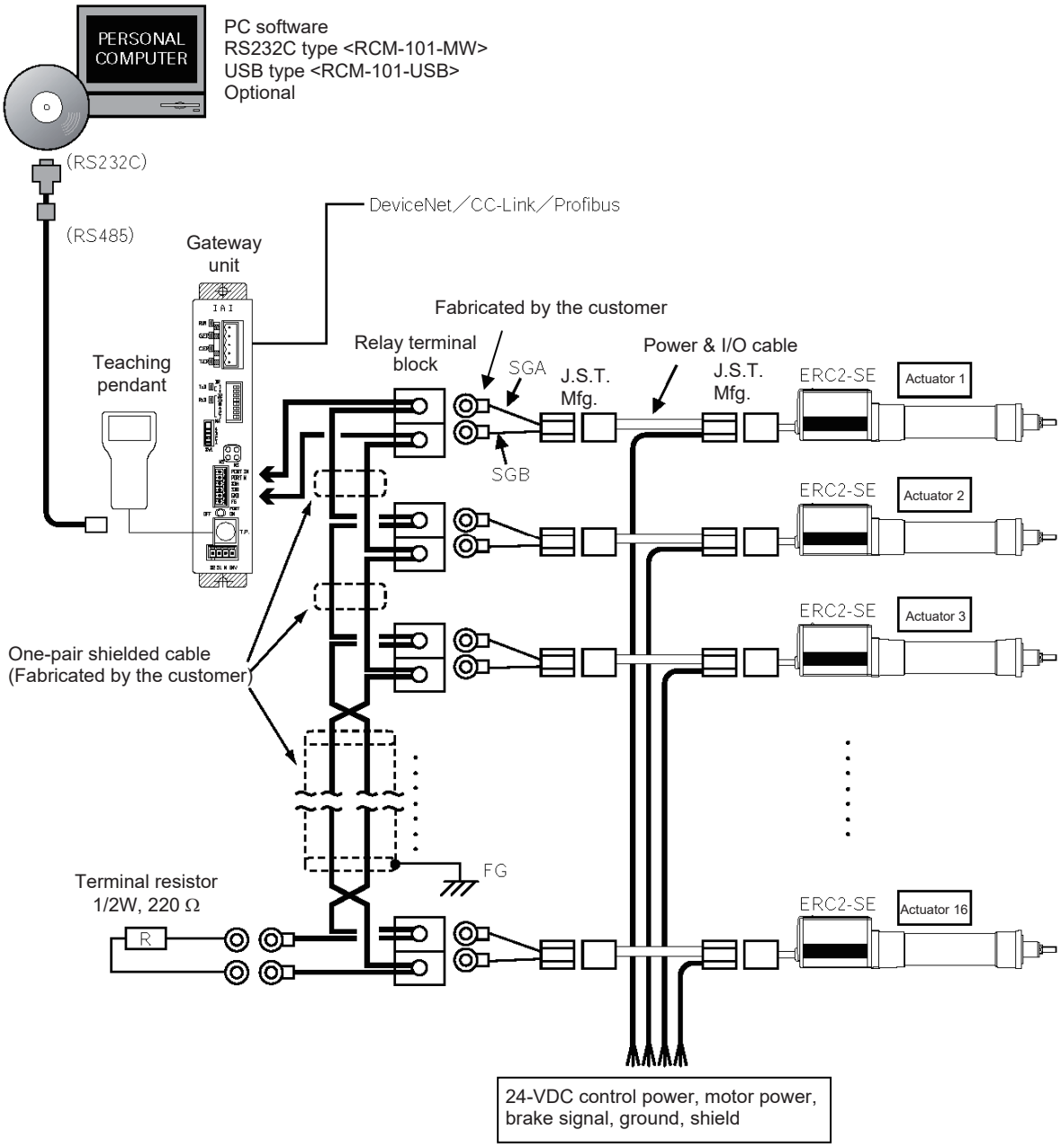

(Note 1)	If the total length of the communication cable is 10 m or longer and you experience communication errors, connect a terminal resistor to the last axis.
(Note 2)	If the actuators use different power supplies, align 0 [V] on all power supplies.
(Note 3)	The gateway unit power must be the same as 0 V of the ERC2 control power.
(Note 4)	Connect the shielded wire of each axis to FG.
(Note 5)	If the overall length of link cable exceeds 30 m, use wire of 22AWG or larger size.

4.2.2 SIO Communication Connection Using a 4-Way Junction

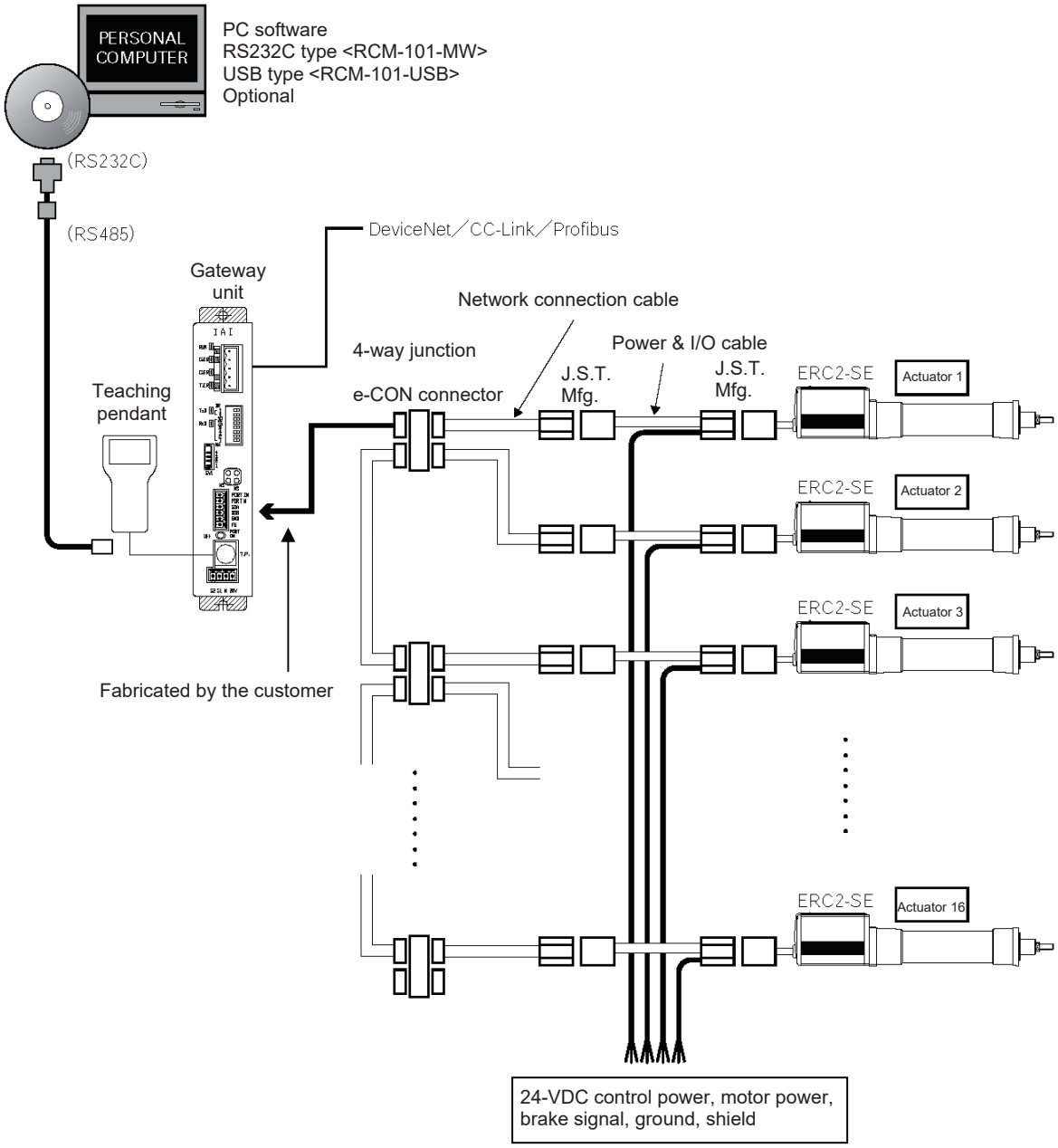

(Note 1)	If the total length of the communication cable is 10 m or longer and you experience communication errors, connect a terminal resistor to the last axis.
(Note 2)	If the actuators use different power supplies, align 0 [V] on all power supplies.
(Note 3)	The gateway unit power must be the same as 0 V of the ERC2 control power.
(Note 4)	Connect the shielded wire of each axis to FG.
(Note 5)	If the overall length of link cable exceeds 30 m, use wire of 22AWG or larger size.

4.2.3 Connecting an Emergency Stop Circuit, Etc.

Emergency stop is actuated by means of cutting off the motor drive power.

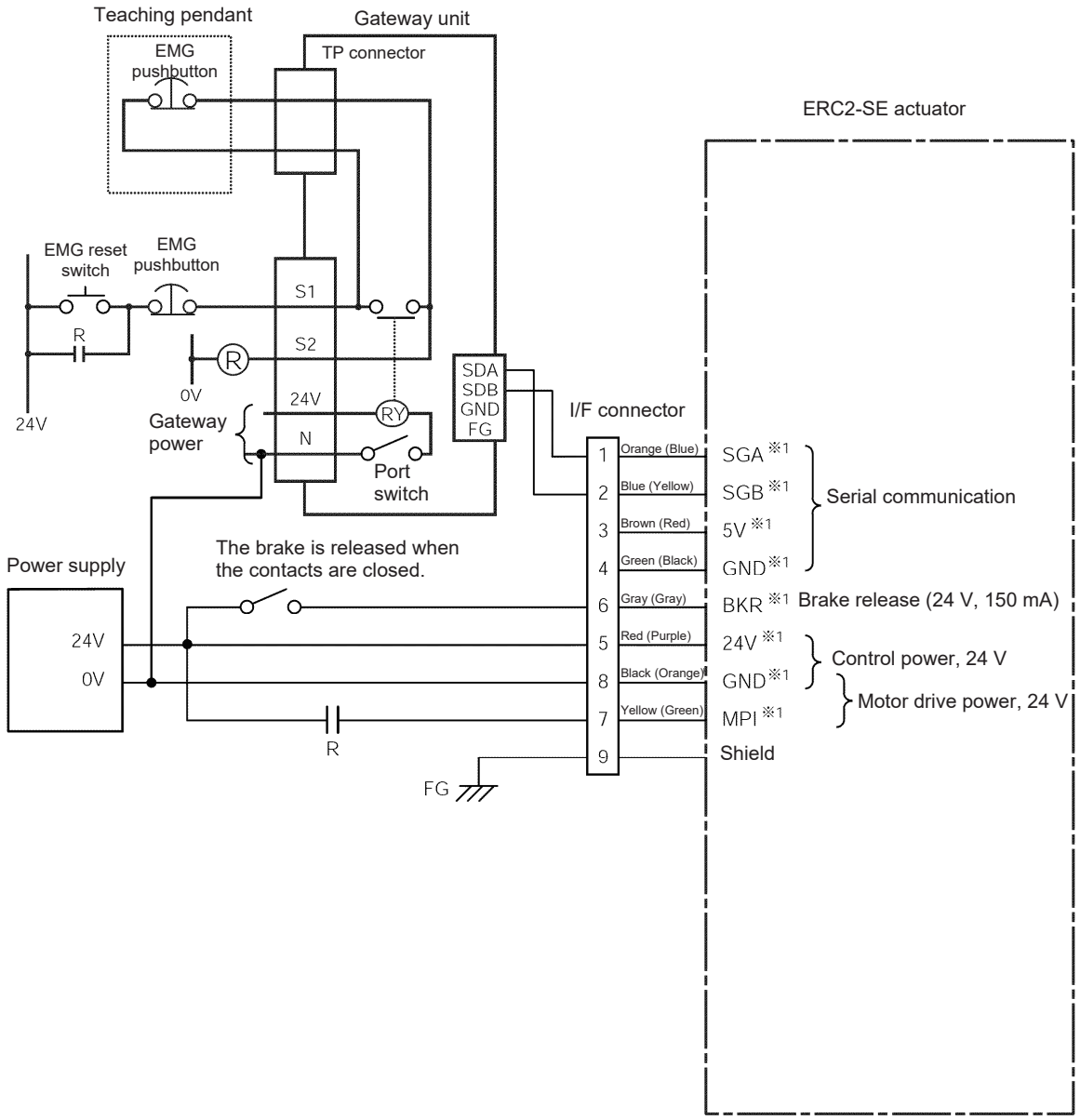

*1 The wire colors for standard cables and robot cables are different. The colors in parentheses are for robot cables.

(Note 1) The gateway unit power must be the same as 0 V of the ERC2 control power.

5. Explanation of Operating Functions

ERC2-SE actuators support two operation modes: [1] “position number specification mode” in which the actuator is operated by specifying position numbers, and [2] “numerical specification mode” in which the actuator is operated by directly specifying values relating to the intended operation.
To move the actuator to a specified position in the “position number specification mode,” basically a position table must be created in advance by entering the target position in the “Position” field.
The target position can be specified as an absolute distance from the home (absolute mode), or as an incremental travel from the current position (incremental mode).
Once the target position is entered, other fields will be automatically populated with the defaults set by the applicable parameters.
The defaults set in the respective fields vary depending on the actuator characteristics.
Additionally, ERC2-SE actuators can be operated over a field network or via RS232C serial communication.
Accordingly, also refer to the operation manual for your gateway unit as well as the Operation Manual for Serial Communication Protocol.

5.1 Description of Position Table

Create a position table using the PC software or teaching pendant. Refer to the operation manual for the PC software or teaching pendant you are using.
This section explains the position table by using the PC software screen as an example.
(The displayed items are different on the teaching pendant.)

No	Position [mm]	Speed [mm/s]	Acceleration [G]	Deceleration [G]	Push [%]	Threshold [%]	Positioning band [mm]
0	5.00	300.00	0.30	0.30	0	0	0.10
1	380.00	300.00	0.30	0.10	0	0	0.10
2	200.00	300.00	0.30	0.10	0	0	0.10

Zone+ [mm]	Zone– [mm]	Acceleration/ deceleration mode	Incremental	Command mode	Standstill mode	Comment
100.00	0.00	0	0	0	4	
400.00	300.00	0	0	0	0	
250.00	150.00	0	0	0	0	

(1) No.

- Indicate the position data number.

(2) Position

- Enter the target position to move the actuator to, in [mm].
  Absolute mode: Enter the distance to the target actuator position from the actuator's home.
  Incremental mode: Enter the distance to the target actuator position from the current position by assuming a movement by constant pitch feed.

No	Position [mm]
0	30.00
1	= 10.00
2	= −10.00

Absolute mode	The target is 30 mm from the home.
Incremental mode	+10 mm from the current position.
Incremental mode	-10 mm from the current position.

* On the teaching pendant screen, this sign indicates that the position is specified in the incremental mode.

(3) Speed

- Enter the speed at which the actuator will be moved, in [mm/sec].
  The default value varies depending on the actuator type.

(4) Acceleration/Deceleration

- Enter the acceleration/deceleration at which the actuator will be moved, in [G].
  Basically, you should set values within the rated range specified in the catalog.
  The input range is greater than the rated range in the catalog, in order to accommodate situations where you want to “shorten the tact time when the load is much smaller than the rated transferring mass.”
  If the load vibrates during acceleration/deceleration and causes problem, decrease the set values.

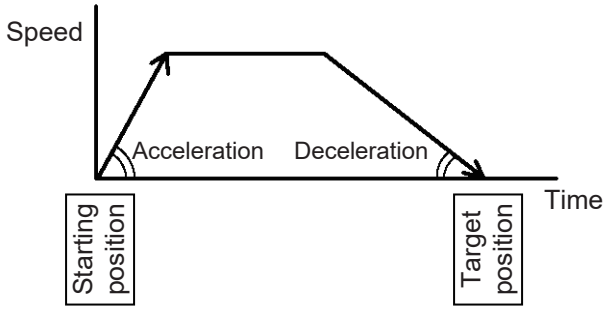

Increasing the set value makes acceleration/deceleration quicker, while decreasing the set value makes acceleration/deceleration more gradual.

> ⚠ Caution: When setting the speed and acceleration/deceleration, refer to 1.5, “Specifications” and enter appropriate values that will prevent the actuator from receiving excessive impact or vibration, by considering the installation conditions and shape of the load. Increasing the speed and acceleration/deceleration changes the transferring mass significantly, and the actuator characteristics also vary from one model to another. Therefore, consult IAI’s Sales Engineering Section for the maximum limits that can be entered in your specific application.

(5) Push

- Select “positioning operation” or “push & hold operation.”
  The factory setting is “0.”
  0: Normal positioning operation
  Other than 0: Push & hold operation (The set value defines the current-limiting value.)

(6) Threshold

- This field is not used for this controller.
  The factory setting is “0.”

(7) Positioning band

- The meaning of the positioning band varies between “positioning operation” and “push & hold operation.”

“Positioning operation”
The set value defines the distance before the target position at which the position complete signal will turn ON.
Increasing the positioning band quick the start of the next operation in the sequence, meaning that the tact time be reduced. Set an appropriate value based on the overall balance of your system.

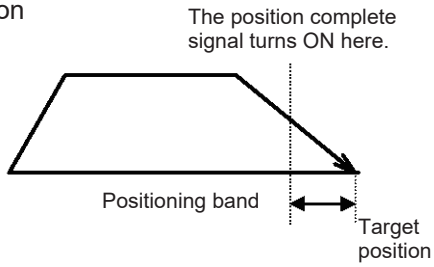

"Push & hold operation"
The set value defines the maximum distance the actuator will push the work part in the push & hold mode upon reaching the target position.
Consider the mechanical variations of the work part and set an appropriate positioning band so that positioning will not complete before the actuator contacts the work part.

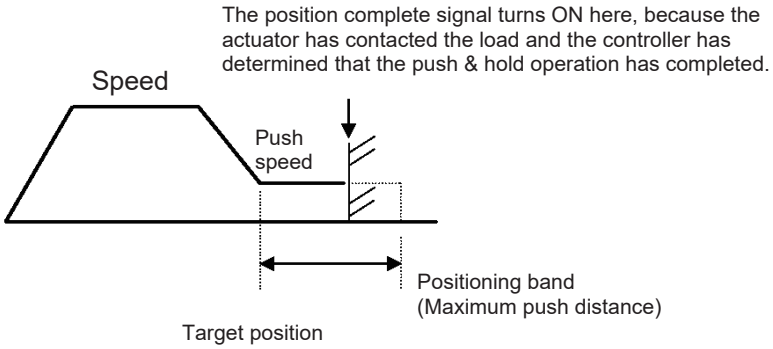

(8) Zone+/–

- Define the zone in which the zone output signal turns ON.
  For added flexibility, different values can be set for each target position.

[Setting example]

No	Position [mm]	Zone+ [mm]	Zone– [mm]	Comment
0	5.00	100.00	0.00	
1	380.00	400.00	300.00	
2	200.00	250.00	150.00	

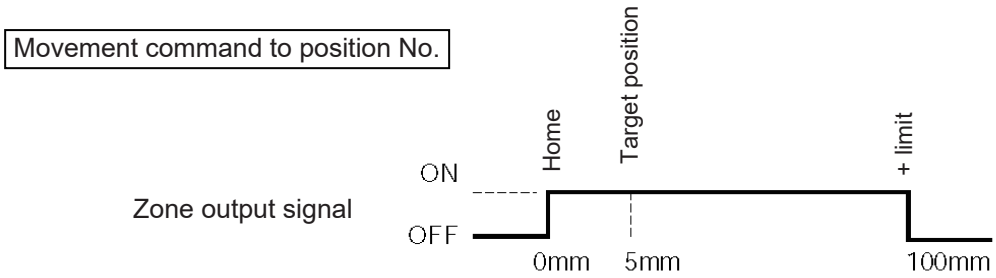

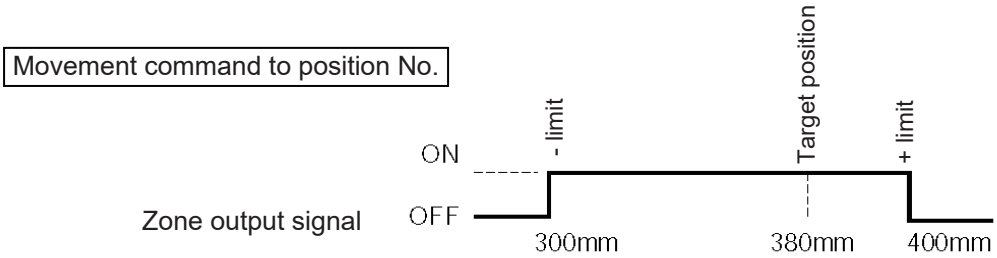

(9) Acceleration/deceleration mode
- This field is not used for this controller.
  The factory setting is “0.”

(10) Incremental
- This setting defines whether to use the absolute mode or incremental mode.
  The factory setting is “0.”
  0: Absolute mode
  1: Incremental mode

(11) Command mode
- This field is not used for this controller.
  The factory setting is “0.”

(12) Standstill mode
- This field is not used for this controller.
  The factory setting is “0.”
  The power-saving mode to be applied while the actuator is standing by is set by parameter No. 53.
  The full servo control mode can be selected by setting “4” in this field.

Full servo control mode

The pulse motor is servo-controlled to reduce the holding current (standstill current that flows after completion of positioning).
Although the exact degree of current reduction varies depending on the actuator model, load condition, etc., the holding current decreases to approx. one-half to one-fourth.
Since the servo remains on, no position deviation occurs.
The actual holding current can be checked in the current monitor screen of the PC software.
To enable this mode, set “4” in this field.

5.1.1 Relationship of Push Force at Standstill and Current-Limiting Value

When performing operation in the push & hold mode, enter the current-limiting value (%) in the push column of the position table.
Determine the current-limiting value (%) from the push force to be applied to the work part at standstill.
The graphs below illustrate the relationship of push force at standstill and current-limiting value for each actuator type:

- Slider type

(1) SA6C type

Low-speed type
(Lead: 3 mm)

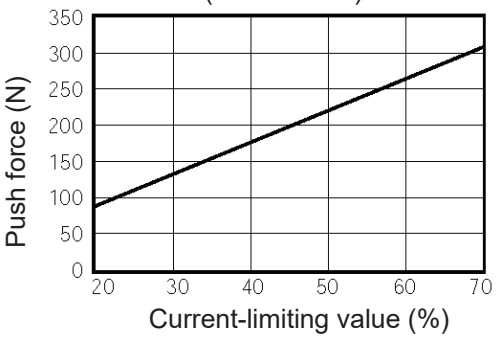

Medium-speed type
(Lead: 6 mm)

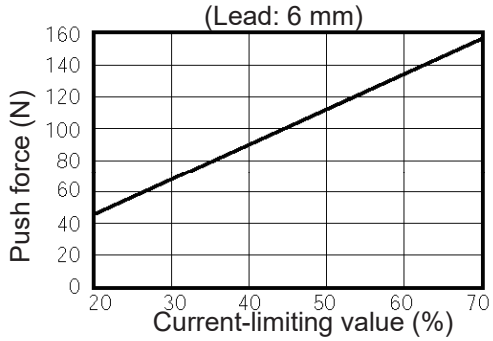

High-speed type
(Lead: 12 mm)

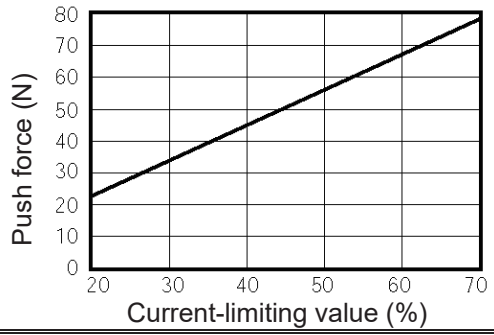

(2) SA7C type

Low-speed type
(Lead: 4 mm)

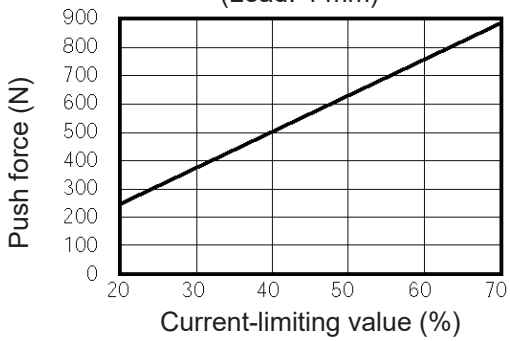

Medium-speed type
(Lead: 8 mm)

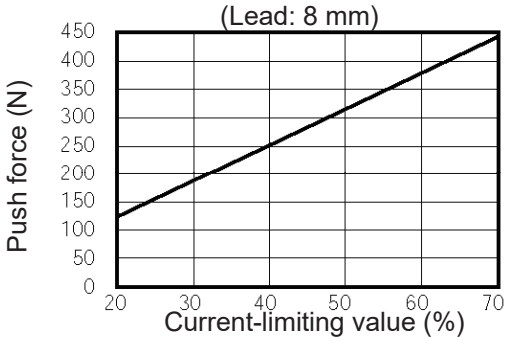

High-speed type
(Lead: 16 mm)

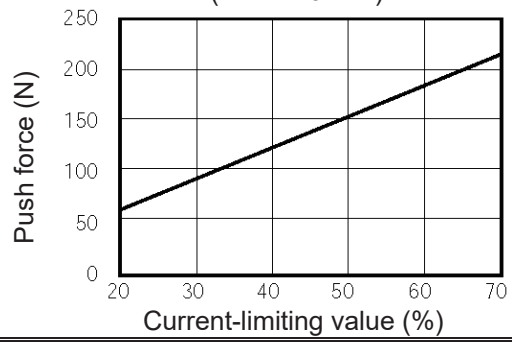

⚠ Caution: The precision of push force at standstill is not guaranteed. The above graphs are provided for reference purposes only. If the push force is too small, malfunction may occur during push & hold operation due to slide resistance, etc., so exercise caution.
The maximum current-limiting value is shown in the above graphs. The minimum value is 20%.

● Rod type

(1) RA6C type

Low-speed type
(Lead: 3 mm)

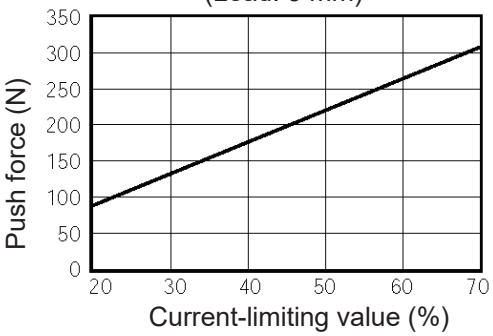

Medium-speed type
(Lead: 6 mm)

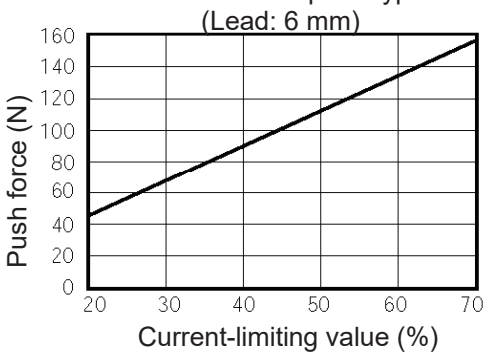

High-speed type
(Lead: 12 mm)

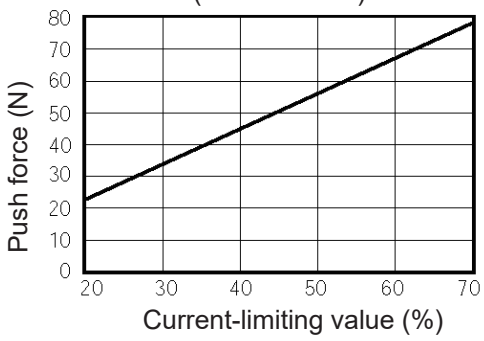

(2) RA7C type

Low-speed type
(Lead: 4 mm)

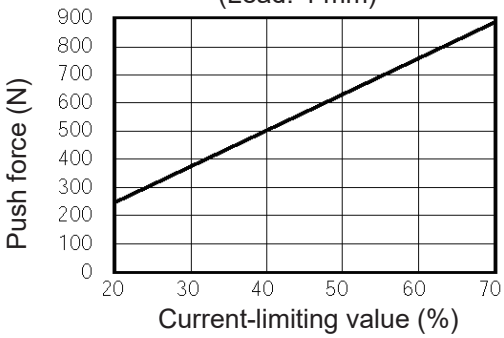

Medium-speed type
(Lead: 8 mm)

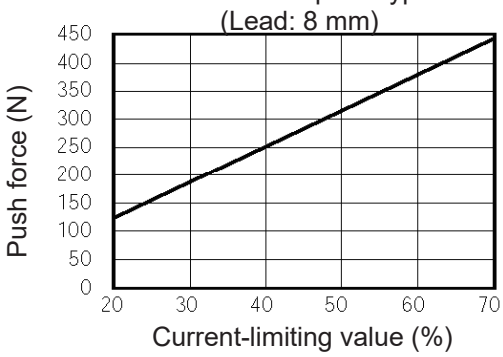

High-speed type
(Lead: 16 mm)

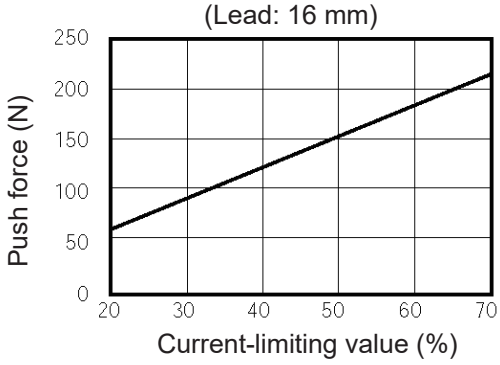

⚠ Caution: The precision of push force at standstill is not guaranteed. The above graphs are provided for reference purposes only. If the push force is too small, malfunction may occur during push & hold operation due to slide resistance, etc., so exercise caution.
The maximum current-limiting value is shown in the above graphs. The minimum value is 20%.

5.2 Data Set in the Numerical Specification Mode

When the actuator is operated in the numerical specification mode, specify data relating to the intended operation (target position, speed, acceleration/deceleration, positioning band, current-limiting value during push & hold operation, etc.) directly. Take note that the position table may or may not be required depending on the operation mode.
For details, refer to the Operation Manual for Gateway Unit and the Operation Manual for Serial Communication Protocol.

5.3 Explanation of Functions

The table below lists the key functions available on ERC2-SE actuators in the position number specification mode and the numerical specification mode, respectively.

ERC2-SE Function List

○: Direct control, Δ: Indirect control, X: Not available

	Position number specification mode		Numerical specification mode						
				DeviceNet gateway		CC-Link gateway			
	Serial communication	Gateway Position number specification mode	Serial communication	Direct numerical specification mode	Command specification mode	Position data limited mode	Normal positioning mode	Push & hold mode	Command specification mode
Home return operation	○	○	○	○	○	○	○	○	○
Positioning operation	Δ Specify a position number in the position table.	Δ Same as on the left	○ Specify position data directly.	○ Specify position data directly.	○ Specify position data directly. ○ Specify a position number in the position table.	○ Specify position data directly.	○ Specify position data directly.	○ Specify position data directly.	○ Specify position data directly. ○ Specify a position number in the position table.
Speed setting	Δ Set in the position table.	Δ Same as on the left	○ Specify directly as a numerical value.	○ Specify directly as a numerical value.	Δ Set in the position table.	Δ Set using a parameter.	○ Specify directly as a numerical value.	○ Specify directly as a numerical value.	Δ Set in the position table.
Acceleration/ deceleration setting	Δ Set acceleration and deceleration differently in the position table.	Δ Same as on the left	○ Specify an acceleration/ deceleration directly as a numerical value.	○ Specify an acceleration/ deceleration directly as a numerical value.	Δ Set acceleration and deceleration separately in the position table.	○ Set an acceleration/ deceleration using a parameter.	○ Specify an acceleration/ deceleration directly as a numerical value.	○ Specify an acceleration/ deceleration directly as a numerical value.	Δ Set in the position table.
Operation by setting acceleration and deceleration differently	Δ Set acceleration and deceleration differently in the position table.	Δ Same as on the left	○ Acceleration/ deceleration data is accepted when positioning is started. To specify a deceleration different from an acceleration, therefore, change the acceleration/deceleratio n data while the actuator is moving, and then restart the operation.	○ Acceleration/ deceleration data is accepted when positioning is started. To specify a deceleration different from an acceleration, therefore, change the acceleration/deceleration data while the actuator is moving, and then restart the operation.	Δ Set acceleration and deceleration separately in the position table.	X Since an acceleration/deceler ation is set by a single parameter, acceleration and deceleration cannot be set differently.	○ Acceleration/ deceleration data is accepted when positioning is started. To specify a deceleration different from an acceleration, therefore, change the acceleration/deceleratio n data while the actuator is moving, and then restart the operation.	○ Acceleration/ deceleration data is accepted when positioning is started. To specify a deceleration different from an acceleration, therefore, change the acceleration/deceleration data while the actuator is moving, and then restart the operation.	Δ Set acceleration and deceleration separately in the position table.
Pitch (incremental) feed	Δ Set in the position table.	Δ Same as on the left	○ Change bit 2 of the CTLF control flag to "1" to perform incremental operation.	X No direct command is available to process a pitch feed request. Program the host PLC to add or subtract a constant travel to/from the current position and then issue a position command.	Δ Set in the position table.	X No direct command is available to process a pitch feed request. Program the host PLC to add or subtract a constant travel to/from the current position and then issue a position command.	X No direct command is available to process a pitch feed request. Program the host PLC to add or subtract a constant travel to/from the current position and then issue a position command.	X No direct command is available to process a pitch feed request. Program the host PLC to add or subtract a constant travel to/from the current position and then issue a position command.	Δ Set in the position table.
Push & hold operation	Δ Set in the position table.	Δ Same as on the left	○	○ Specify position data directly.	Δ Set in the position table.	X	X	○	Δ Set in the position table.
Speed change during movement	Δ Combine two or more position numbers.	Δ Same as on the left	○ Speed data is accepted when positioning is started. To change the speed during movement, therefore, change the speed while the actuator is moving, and then restart the operation.	○ Speed data is accepted when positioning is started. To change the speed during movement, therefore, change the speed while the actuator is moving, and then restart the operation.	Δ Combine two or more position numbers.	X	○ Speed data is accepted when positioning is started. To change the speed during movement, therefore, change the speed while the actuator is moving, and then restart the operation.	○ Speed data is accepted when positioning is started. To change the speed during movement, therefore, change the speed while the actuator is moving, and then restart the operation.	Δ Combine two or more position numbers.
Pause	○	○	○	○	○	○	○	○	○
Zone signal	○ Zone signals are set in the position table or using user parameters. PZONE, ZONE1 and ZONE2 can be output.	○ Zone signals are set using user parameters. ZONE1 and ZONE2 can be output.	○ Zone signals are set using user parameters. ZONE1 and ZONE2 can be output.	X	This function is not available for simple numerical specification axes Positioner operation: ○ (Depending on the PIO pattern)	X	X	X	This function is not available for simple numerical specification axes. Positioner operation: ○ (Depending on the PIO pattern)
Power-saving mode	○ The "full servo control" power-saving mode can be selected using parameter No. 53. (The automatic servo-off mode cannot be selected.)	○ Same as on the left	○ Same as on the left	○ Same as on the left	○ Same as on the left	○ Same as on the left	○ Same as on the left	○ Same as on the left	○ Same as on the left
Position table	Required	Required	Not required	Not required	Required	Not required	Required	Required	Required

5.3.1 Control Signals and Control Data

To operate the actuator via serial communication, the internal 16-bit memory (Modbus registers and statuses) of the controller must be written/read. The key signals and symbols used in these operations are explained below. For details, refer to the Operation Manual for Serial Communication Protocol.

(1) Controller input signals
(PLC → Controller)

Register	Bit address	Bit position	Signal symbol	Signal name	Description
Device control register DRG1 Address 0D00H [Common]		15	-	-	-
	0401H	14	SFTY	Safety speed command	When this bit is “0,” the safety speed set by the parameter is disabled. When the bit is “1,” the safety speed is enabled.
		13	-	-	-
	0403H	12	SON	Servo ON command	The servo is off when this bit is “0” and on when the bit is “1.”
		11 to 9	-	-	-
	0407H	8	RES	Alarm reset	The “0” status of this bit indicates a normal condition. Present alarms will be reset at the “0” → “1” edge of this bit.
		7	-	-	-
		6	-	-	-
	040AH	5	STP	Pause command	The “0” status of this bit indicates a normal condition. When this bit changes to “1,” the actuator will pause (decelerate to a stop).
	040BH	4	HOME	Home return command	Home return operation will be performed at the “0” → “1” edge of this bit.
	040CH	3	CSTP	Positioning start	The “0” status of this bit indicates a normal condition. The actuator will start moving to the target position specified by the applicable position number at the “0” → “1” edge of this bit.
		2 to 0	-	-	-

(Note) The meanings of [Common], [POS specification] and [Numerical specification] in the “Register” field are explained below:
- [Common]: The register is used in both the position number specification mode and the numerical specification mode.
- [POS specification]: The register is used in the position number specification mode.
- [Numerical specification]: The register is used in the numerical specification mode.

(PLC → Controller)

Register	Bit address	Bit position	Signal symbol	Signal name	Description
Position number specification register POSR Address 0D03H [POS specification]		15 to 6	-	-	-
	043AH	5	PC32	-	Specify a command position number using a 6-bit binary code. Positioning operation will start when the positioning start signal bit CSTR is changed to “1.”
	043BH	4	PC16	-	
	043CH	3	PC8	-	
	043DH	2	PC4	-	
	043EH	1	PC2	-	
	043FH	0	PC1	-	
Position number specification register POSR Address 9800H [POS specification]	-	15 to 6	-	-	-
	-	5	PC32	-	This register is the same as the one explained above, except that with this register, positioning operation will start the moment a command position number is written. There is no need to change the positioning start signal bit CSTR to “1.”
	-	4	PC16	-	
	-	3	PC8	-	
	-	2	PC4	-	
	-	1	PC2	-	
	-	0	PC1	-	

(PLC → Controller)

Register	Address	Description
PCMD Position data specification	9900H 9901H	b15 … b8 b7 … b0 Upper: Sign Lower: LSB
[Numerical specification]		Signed 32-bit integer (unit: 0.01 mm) Setting range: FFF0BBC1H to 000F423FH (-999999 to 999999) • A negative value is indicated by a 2's complement. Accordingly, the most significant bit becomes "1." Positioning operation will start when the lower word (9901H) of this register is rewritten.
INP Positioning band specification	9902H 9903H	b15 … b8 b7 … b0 Upper Lower
[Numerical specification]		32-bit integer (unit: 0.01 mm) Setting range: 0H to 000F423FH (0 to 999999) In positioning operation, this register sets a band within which a completion of positioning is detected. In push & motion operation (the push & motion operation must be specified using the CTLF flag), this register sets a push band.
VCMD Speed specification	9904H 9905H	b15 … b8 b7 … b0 Upper Lower
[Numerical specification]		32-bit integer (unit: 0.01 mm/sec) Setting range: 0H to 000F423FH (0to 999999) This register specifies a moving speed. Movement will start when the lower word (9905H) of this register is rewritten.
ACMD Acceleration/ deceleration	9906H	b15 … b8 b7 … b0
[Numerical specification]		16-bit integer (unit: 0.01G), setting range: 0H to 012CH (0 to 300) If a value exceeding the default acceleration/deceleration is set in parameter No. 9, an alarm will generate the moment the actuator starts moving. Movement will start when this register is rewritten.

(PLC → Controller)

Register	Address	Description
Current-limiting value during push & hold operation [Numerical specification]	9907H	b15 b8 b7 b0 – – – – – – – – | | | | | | | |
		16-bit integer (unit: %, setting range: 00H to FFH/ 0 to 100 %) (Note) Movement will start when this register is rewritten.
CTLF Control flag [Numerical specification]	9908H	b15 b8 b7 b2 b1 b0 – – – – – – – – – – – – – | | |
		This flag sets a bit pattern to specify operation settings. [1] Bit 1 (b1) 0: Normal operation 1: Push & hold operation [2] Bit 2 (b2) 0: The push direction after completion of approach operation represents the forward direction. 1: The push direction after completion of approach operation represents the reverse direction. [3] Bit 3 (b3) 0: Normal operation 1: Incremental operation

(Note) Set in a range of 20% to 70% (33H to B3H) if the actuator imposes limitations.

(2) Controller output signals
(Controller → PLC)

Register	Bit address	Bit position	Signal symbol	Signal name	Description
Device status register DSS1 Address 9005H	0100H	15	EMGS	Emergency stop status	An emergency stop is being actuated when this bit is “1.”
	0101H	14	SFTY	Safety speed enabled	The safety speed is enabled when this bit is “1.”
	0102H	13	PWR	Controller ready	The controller is ready when this bit is “1.”
	0103H	12	SV	Servo ready	Operation can be performed at any time (the servo is on) when this bit is “1.”
	0104H	11	PSFL	Missed work part during push & hold operation	The actuator has missed the work part during push & hold operation, when this bit is “1.”
	0105H	10	ALMH	Major failure status	An alarm is present that inhibits continuation of operation, when this bit is “1.”
	0106H	9	ALML	Minor failure status	An alarm is present that permits continuation of operation, when this bit is “1.”
		8 to 6	-	-	-
	010AH	5	STP	Pause command active	A pause command is being executed when this bit is “1.”
	010BH	4	HEND	Home return completion	Home return has completed when this bit is “1.”
	010CH	3	PEND	Position complete	Positioning has completed when this bit is “1.”
[Common]		2 to 0	-	-	-
Expansion device status register DSSE Address 9007H		15 to 12	-	-	-
	0124H	11	GHMS	Homing	Home return operation is currently in progress when this bit is “1.”
	0123H	10	PUSH	Pushing & holding	Push & hold operation is currently in progress when this bit is “1.”
		9 to 6	-	-	-
	012AH	5	MOVE	Moving	The actuator is moving (during home return, push & hold operation, etc.) when this bit is “1.”
[Common]		4 to 0	-	-	-

(Controller → PLC)

Register	Bit address	Bit position	Signal symbol	Signal name	Description
Zone status register ZONS Address 9013H		15 to 9	-	-	-
	0147H	8	PZONE	Position zone output	If individual zone boundaries are set in the position table, this bit will turn “1” when the current position enters the range specified by the boundaries.
		7 to 2	-	-	-
	014EH	1	ZONE2	Zone output 2	This bit will turn “1” when the current position enters the range specified by the zone boundary 2 parameters.
[Common]	014FH	0	ZONE1	Zone output 1	This bit will turn “1” when the current position enters the range specified by the zone boundary 1 parameters.
Position number status register POSS Address 9014H [POS specification]		15 to 6	-	-	-
	013AH	5	PM32		A completed position number is output using a 6-bit binary code.
	013BH	4	PM16		
	013CH	3	PM8		
	013DH	2	PM4		
	013EH	1	PM2		
	013FH	0	PM1		

(Controller → PLC)

Register	Address	Description
PNOW Current position [Numerical specification]	9000H 9001H	b15 b8 b7 b0 Upper: Sign Lower
		The current position is indicated by a signed 32-bit integer (unit: 0.01 mm). A negative value is indicated by a 2’s complement. Accordingly, the most significant bit becomes “1.”

5.3.2 Timings after Power On

Follow the procedure below to turn on the power after confirming that the slider or rod is not contacting a mechanical end nor the load is contacting any peripheral equipment:

[1] Cancel the emergency stop or turn on the motor drive power.

[2] Supply the 24-VDC controller power.
If 24 VDC is supplied in a condition where no emergency stop is actuated, the servo will be turned on automatically in the controller.

[3] Initial setting of minimum parameter(s) required
(Example) • To change the feed speed during teaching:
Change parameter No. 35 (Safety speed).

[4] Using a PC or teaching pendant to set optimal values in the “Position,” “Speed,” “Acceleration” and “Deceleration” fields, etc., of the position table.

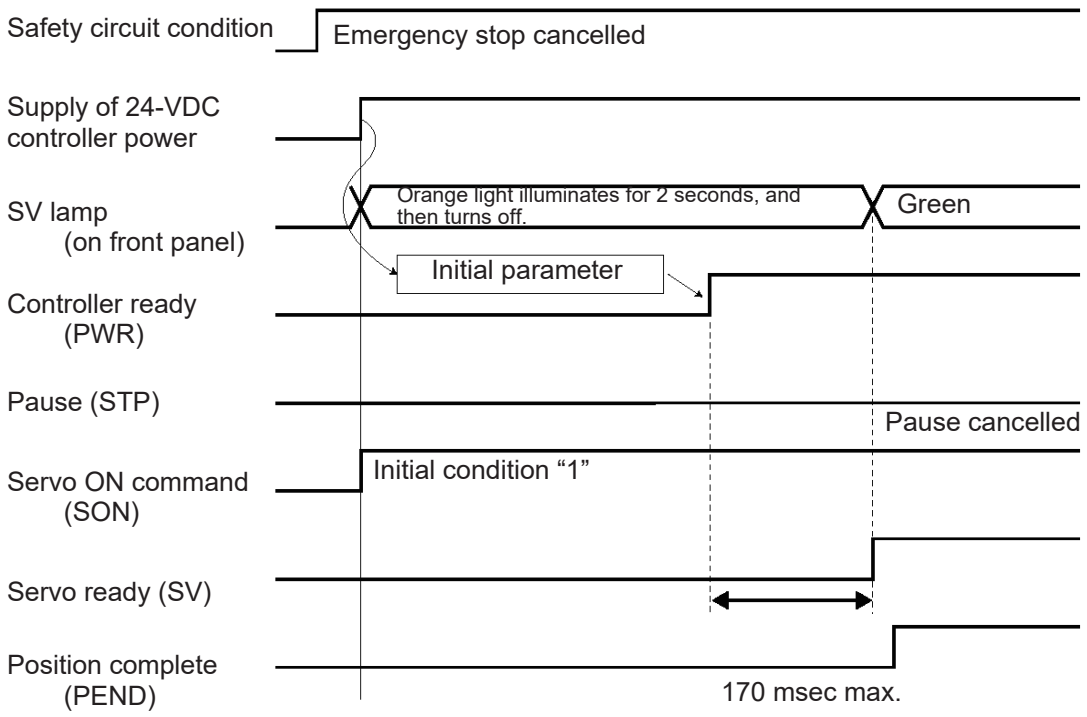

⚠ Caution: When the power is turned on while an emergency stop is actuated, and then the emergency stop is cancelled, the servo will turn on with a maximum delay of 170 msec after the cancellation of emergency stop.

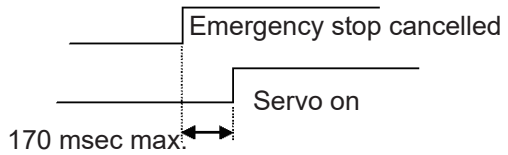

⚠ Warning: Since a pulse motor is used as the driving motor, the excited phase will be detected when the servo is turned on for the first time after the power on.
Accordingly, the actuator must be able to move when the servo is turned on.
If the slider or rod is contacting a mechanical end or the load is contacting any peripheral equipment, the excited phase will not be detected correctly and a malfunction or excitation detection error may result.
In such a case, move the actuator by hand to a position where it can move freely, before turning on the servo.
If the actuator is equipped with a brake, the brake release switch must be turned on to forcibly release the brake. When operating the brake release switch, be careful not to let your hand pinched, or the robot hand or work part damaged, by the actuator dropping suddenly due to its dead weight.
If the actuator cannot be moved by hand, one option is to change parameter No. 28 (Default direction of excited-phase signal detection). If you wish to change this parameter, consult IAI in advance.

■ Controller ready (PWR)
This signal indicates whether the controller can be controlled externally.
When the signal bit is “0,” the controller is busy. When the bit is “1,” the controller is ready.
The controller does not become busy in normal conditions of use.

■ Servo ON command (SON)
The servo will turn on when this signal bit turns “1.”
Use this signal if servo on/off must be controlled to provide a safety circuit for the entire system on the PLC side.

■ Servo ready (SV)
This is a monitor signal indicating, following the input of a servo ON command (SON), that the servo is on and the motor can be driven. The “1”/“0” status of this signal bit is synchronized with the on (green light)/off status of the SV lamp provided on the front panel.

5.3.3 Home Return Operation

This controller uses an incremental position detector (encoder), and will therefore lose its mechanical coordinates once the power is cut off.
For this reason, home return must be performed to establish mechanical coordinates every time the power is turned on.
To perform home return operation, input a home return command (HOME).

Operation timings
PLC processing 1: The home return command (HOME) signal turns ON when the start button is pressed.
Operation: [1] The actuator starts moving toward the mechanical end on the home side.
[2] The actuator contacts the mechanical end and reverses its direction, moves to the home position, and then pauses.
→ The home return completion (HEND) signal turns ON.
PLC processing 2: The home return command (HOME) signal turns OFF.
PLC processing 3: Continuous operation starts.

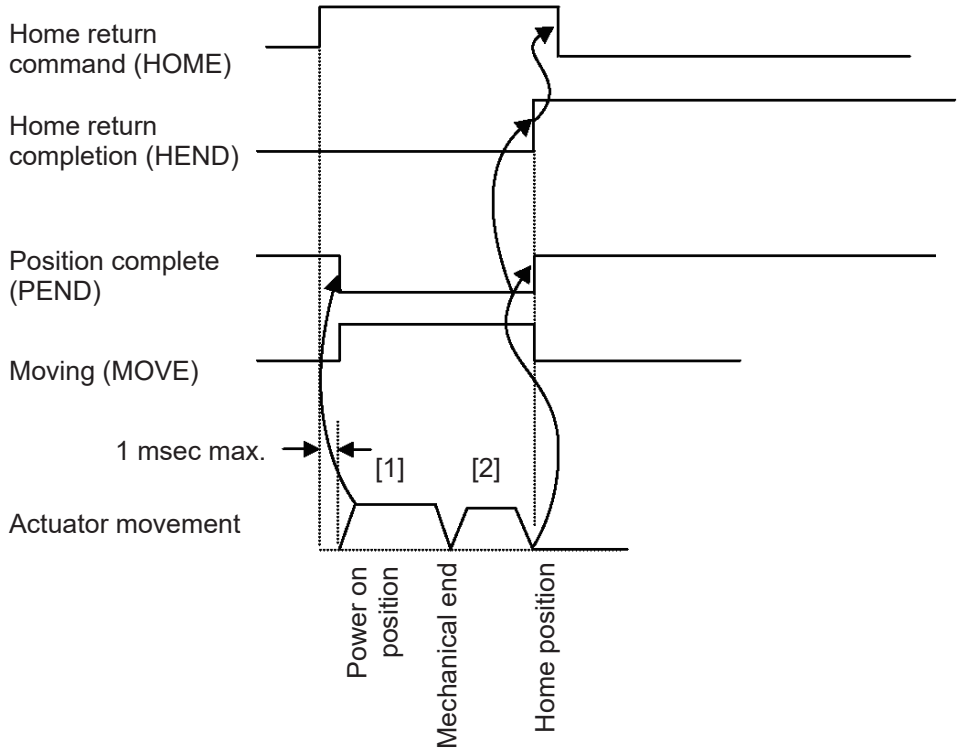

⚠ Caution: Take note of the following points when performing home return:
[1] Confirm that no obstacles are present in the home return path.
[2] If any obstacle is found in the home return path, move the actuator to the opposite direction first and remove the obstacle.
[3] Changing the home return command bit to “1” will change the position complete bit to “0” and the moving output bit to “1.”
Reset the home return command bit to “0” after confirming that the home return completion bit has turned “1.”

■ Home return command (HOME)

Home return operation will start upon detection of the “0” → “1” edge of this signal bit.
When home return is completed, the home return completion (HEND) signal will be output.
The HOME signal can be input as many time as desired even after home return has been completed once.

(Note) Even if home return is not performed after the power has been turned on, the actuator will automatically perform home return operation as part of the first positioning operation (CSTR signal).

■ Home return completion (HEND)

This signal bit is “0” immediately after the power has been turned on. It will turn “1” at the following timings:

[1] Home return operation initiated by the HOME signal has completed.
[2] Home return operation performed as part of the first positioning operation initiated by the CSTR signal has completed.

Once turning “1,” this signal bit will not turn “0” until the input power is cut off or the HOME signal is input again.
Use this signal as an interlock signal to confirm that the actuator is safe to perform home return.

5.3.4 Positioning Operation

First, change the position complete (PEND) signal bit to “1” by turning on the 24-VDC power by referring to 5.3.2. Home return is not yet complete immediately after the power has been turned on. Accordingly, home return operation must be performed using the home return command (HOME) as explained in 5.3.3.
When positioning operation is started (using the CSTR signal) after specifying a position (via position number specification or direct position data specification), the actuator will perform home return operation and then move to the specified position.

An example of performing positioning operation using an actuator with a 400-mm stroke is explained below.

Example of position table

No	Position [mm]	Speed [mm]	Acceleration [G]	Deceleration [G]	Push [%]	Positioning band [mm]	Comment
0	5.00	300.00	0.30	0.30	0	0.10	
1	200.00	300.00	0.30	0.30	0	0.10	
2	380.00	300.00	0.30	0.30	0	0.10	

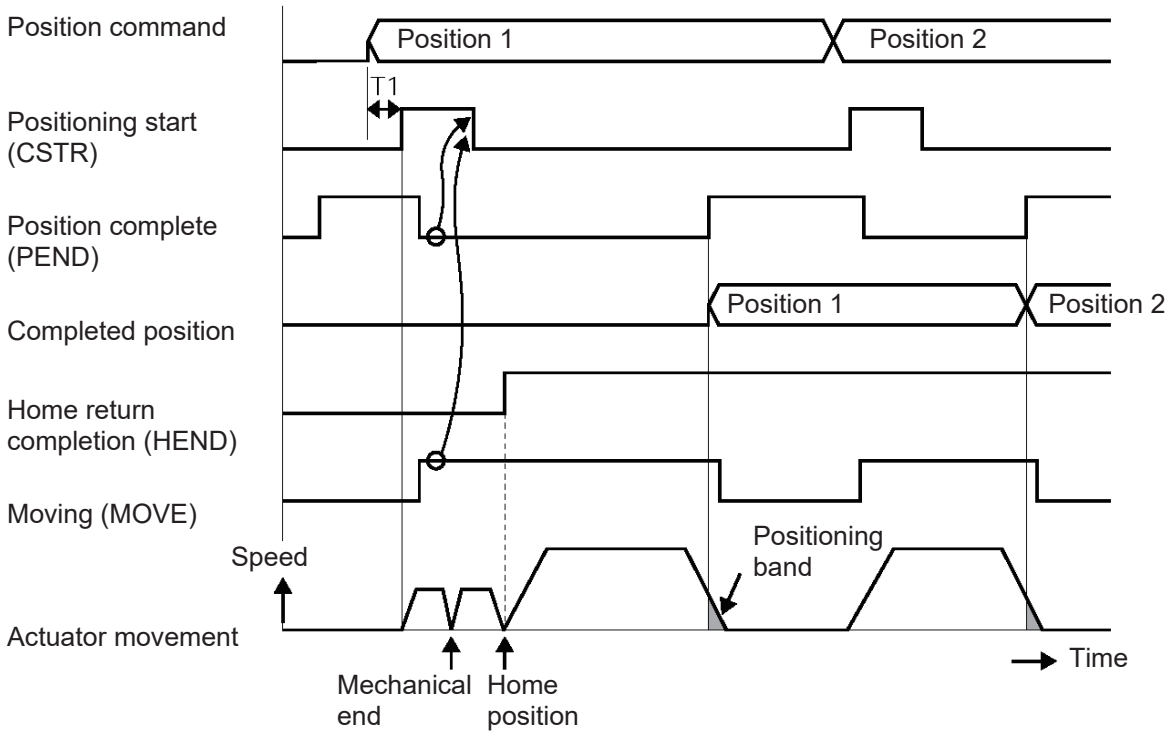

*T1: Set to T1 ≥ 0 (ms) by considering the scan time of the host controller.

Explanation of operation

[1] When the servo becomes ready after the supply voltage has been turned on, the servo ready (SV) and position complete (PEND) bits will turn “1.” After confirming that PEND is “1,” specify position 1 and change the positioning start (CSTR) bit to “1.”
As for the method of position specification, specify a desired position using six bits from PC1 to PC32, or directly specify it as a numerical value in the register PCMD.
→ PEND will turn “0,” while the moving (MOVE) bit will turn “1,” as soon as the actuator starts home return operation.
[2] Change CSTR to “0” after confirming that MOVE has turned “1.”
→ The moment the home return is completed (HEND turns “1”), the actuator will start moving to position 1.
[3] When the actuator enters the positioning band (INP) specified with respect to the command value for position 1, PEND will turn “1,” while MOVE will turn “0,” and the completed position number will also be output in the form of six bits from PM1 to PM32 in the register POSS.
[4] Next, specify position 2 and change CSTR to “1,” in the same manner as explained in [1]. The actuator will start moving to position 2.
[5] Positioning to position 2 will complete in the same manner as explained in [3].

⚠ Caution: When the start signal turns ON, the position complete signal will turn OFF and the moving output will turn ON.
Always turn OFF the start signal after confirming that the moving output has turned ON (position complete output has turned OFF).
<u>If the start input remains ON, the position complete output will not turn ON even after the actuator has completed the specified movement</u>, as shown below.

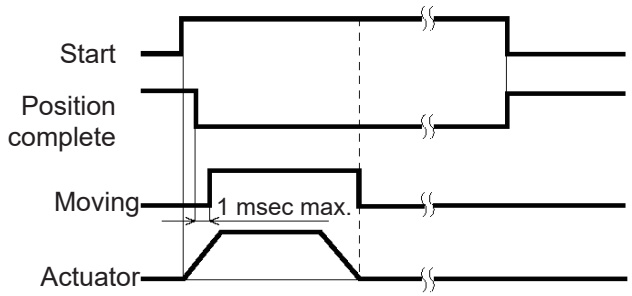

Movement is complete.

■ Positioning start (CSTR)

Upon detecting the “0” → “1” leading edge of this signal bit, the controller will read the target position number specified by a binary code consisting of six bits from PC1 to PC32 (in the position number specification register) and cause the actuator to move to the target position of the corresponding position data.
Before positioning is performed, however, the target position, speed and other operation data must be set in the position table using a PC/teaching pendant.
If this command is issued when home return operation has never been performed (= the HEND output signal bit is “0”) after the power was turned on, the actuator will perform home return operation automatically and then move to the target position.

■ Moving (MOVE)

This signal is output while the actuator is moving (also during home return, push & hold operation and jogging) with the servo turned on.
Use this signal together with PEND to determine the actuator status from the PLC side.
This signal bit will turn “0” upon completion of positioning, upon completion of home return, after push & hold completion judgment during push & hold operation, and during pause.

■ Command position number (PC1 to PC32)

When a moving command is executed at the “0” → “1” edge of the CSTR signal bit, a binary code specified by six signal bits from PC1 to PC32 will be read as the command position number.

■ Completed position number (PM1 to PM32)

These signals can be used to check the completed position number effective when the PEND signal bit has turned “1.”
These signals are output as a binary code in the position number status register.
Immediately after the power has been turned on, all signal bits from PM1 to PM32 are “0.”
All bits remain “0” while the actuator is moving.
As evident from the above explanation, these signals are output only upon completion of positioning.
Although all signal bits will turn “0” when the servo is turned off or an emergency stop is actuated, the bits will return to “1” when the servo is turned on again, if the actuator is inside the positioning band with respect to the target position. If the actuator is not inside the positioning band, the signal bits will remain “0.”
These bits will also turn “1” when the push & hold completion judgment signal has turned ON, or the actuator has missed the work part, during push & hold operation.

■ Position complete (PEND)

This signal indicates that the target position has been reached, and turns ON only when the following conditions are satisfied:

[1] The servo ready (SV) bit is “1” AND
[2] the current position has reached the positioning band before each target position OR
[3] the actuator has not missed the work part during push & hold operation.

Use this signal as a trigger signal to operate peripheral equipment upon reaching the target position.
Increasing the positioning band will allow a command to be issued more quickly to peripheral equipment, which will effectively shorten the tact time of the entire system.

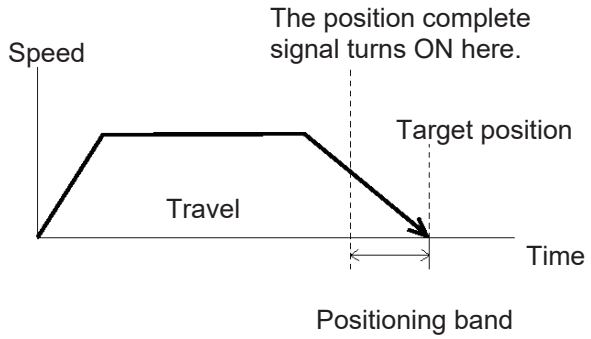

When the servo turns on after the power on, the current position will become the target position. As a result, this signal bit will turn “1.” It will turn “0” if positioning operation is started thereafter with the CSTR signal bit changing to “1.”

(Note) If the servo is turned off or an emergency stop is actuated while the actuator is stopped at the target position, PEND will change to “0.”
When the servo is turned on again, PEND will return to “1” if the actuator is inside the positioning band.
If CSTR remains “1,” PEND will not become “1” even if the current position is inside the positioning band.
It will turn “1” only after CSTR has turned “0.”

5.3.5 Push & Hold Operation

Just like with an air cylinder, the end of the rod can be pressed against a work part and maintained in this condition.
The push & hold operation is useful in clamping or press-fitting of work parts.

(1) Basic operation
As shown below, the actuator moves to the specified target position, after which it will move at the specified push speed to push the work part over a distance up to the specified positioning band.
If the push force reaches a certain level while the actuator is still pushing the work part, the controller will recognize that push & hold operation has completed and change the position complete signal bit to “1.”

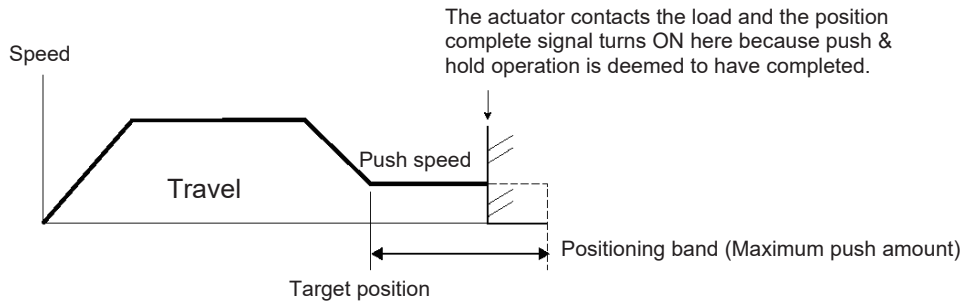

• Definition of push direction

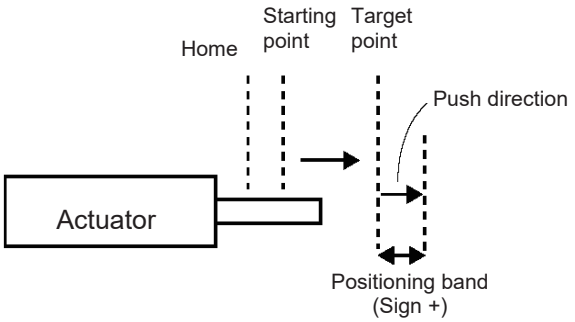

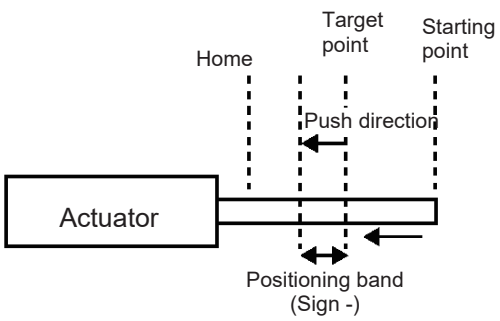

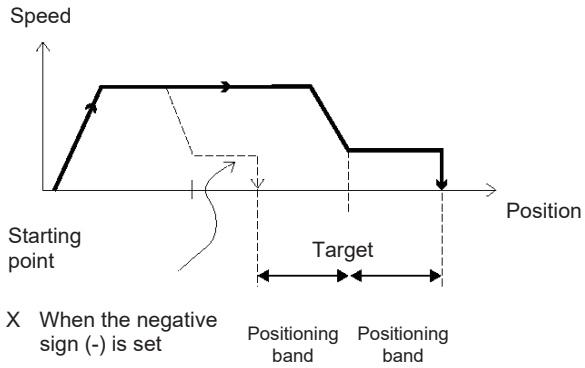

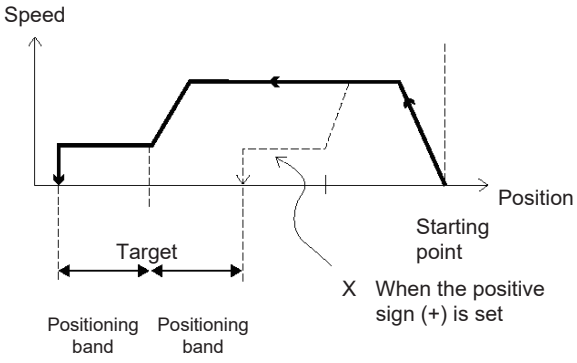

As shown above, the push direction is positive (+) when the actuator pushes the work part in the direction of increasing coordinate value from the starting point toward the target position, whereas the push direction is negative (-) when the actuator pushes the work part in the direction of decreasing coordinate value. Here, exercise caution because setting a wrong push direction will prevent the actuator from operating correctly; specifically, the actuator will perform push & hold operation only for twice the positioning band at the starting point.

[1] Specification of push & hold mode
- Set a value (current-limiting value) “other than 0” in the “Push” field of the position table.
- To specify the push & hold mode numerically, set bit 0 of the control flag specification register CTLF to “1.”

[2] Push speed
Set a desired push speed in parameter No. 34 (Push speed).
(An appropriate push speed has been set at the factory in accordance with the actuator model.)

[3] Maximum push amount
- Set a desired amount in the “Positioning band” field of the position table.
- To specify the maximum push amount numerically, set the applicable value in the positioning band register (INP).
  (Consider a position error that may generate when installing the work part, and if the work part is made of elastic material, also consider a possible deflection.)

[4] Push direction
- The push direction is specified by the sign in the “Positioning band” field of the position table.
- To specify the push direction numerically, set bit 1 of the control flag specification register CTLF to “0” or “1.”

[5] Push & hold completion judgment
- Push & hold completion judgment is made based on the generated motor torque (push force) and push time.
- Set the push force as a current-limiting value (%) in the “Push” field of the position table. To specify the push force numerically, set the applicable value in the push-current limiting value during push & hold operation register (PPOW).

* Determine an appropriate push force based on the characteristics (shape, material, etc.) of the work part, and then determine the corresponding current-limiting value using the relation diagram of “push force and current-limiting value” for the applicable actuator.

- Set the push & hold stop judgment period in parameter No. 6.
  (The factory setting is 255 msec.)

[6] Continuous push & hold
- Although the position complete signal turns “1” once a completion of push & hold operation is recognized, the actuator will perform the push & hold operation continuously until the next movement command is issued (command position number and positioning start signals are output).

Warning
- If the actuator contacts the work part before reaching the target position, a servo error alarm will generate. Pay due attention to the position relationship of the target position and the work part.
- Even when the actuator appears stationary, it actually continues to push the work part at the push force determined by the current-limiting value. Since the actuator is not physically stopped, exercise due caution when handling any actuator-related operation during this period.

(2) The work part is missed during push & hold operation
If the actuator did not contact the work part after moving the specified positioning band (= the motor current does not reach the current-limiting value during push & hold operation), the position complete signal will not be output. However, the applicable completed position number will still be output.
At that time, the PSFL bit in the device status register (DSS1) will turn “1.”
Therefore, program the host PLC to perform a timeout check based on a sufficient timeout period.

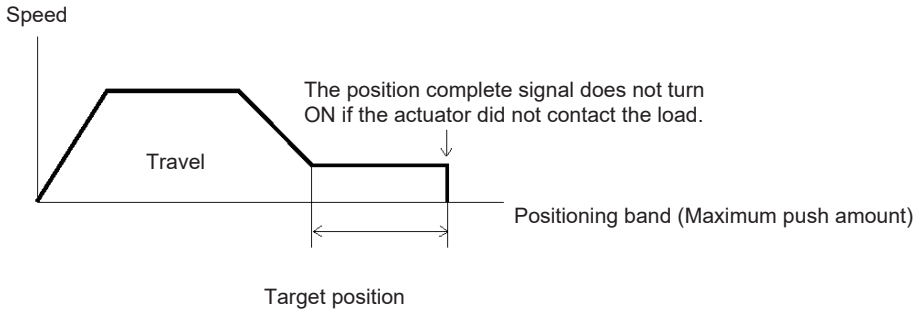

(3) The work part moves after completion of push & hold operation
[1] The work part moves in the push direction
If the work part moves in the push direction after completion of push & hold operation, the actuator will chase the work part within the positioning band.
If the current drops below the current-limiting value set during push & hold operation, the position complete signal will turn OFF. The signal will turn ON when the current rises to or above the current-limiting value again.

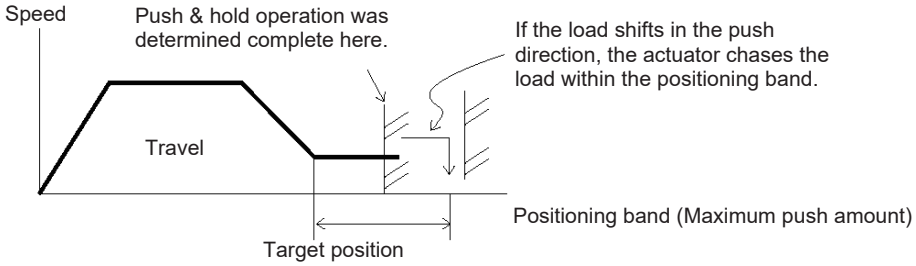

[2] The work part moves in the opposite direction
(The actuator is pushed back by a strong reactive force of the work part)
If the actuator is pushed back after the push & hold operation has completed because the push force of the actuator is smaller than the reactive force of the work part, the actuator will be pushed back all the way until its push force balances out with the reactive force of the work part.
The position complete signal remains ON.

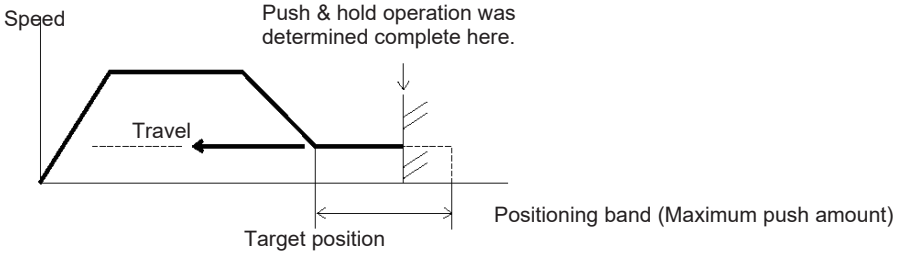

(Note) If the actuator is pushed back to the target position, an alarm will generate.

(4) The push direction is set incorrectly

Exercise caution when setting the push direction, because if the direction is set incorrectly, the position will deviate by twice the positioning band, as shown below.

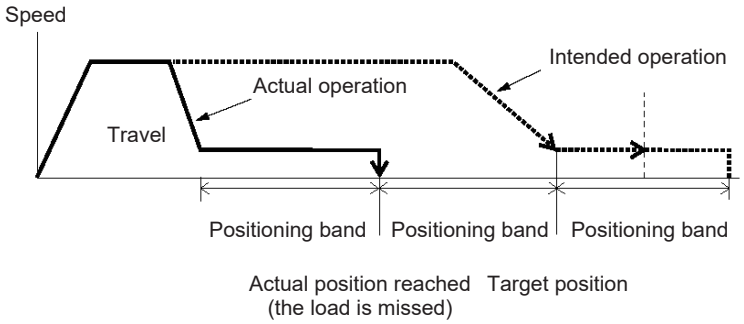

5.3.6 Pause

When the pause command (STP) bit is changed to “1” while the actuator is moving, the actuator will decelerate to a stop. Since the remaining travel is held, changing STP to “0” again will resume the movement to complete the remaining travel.

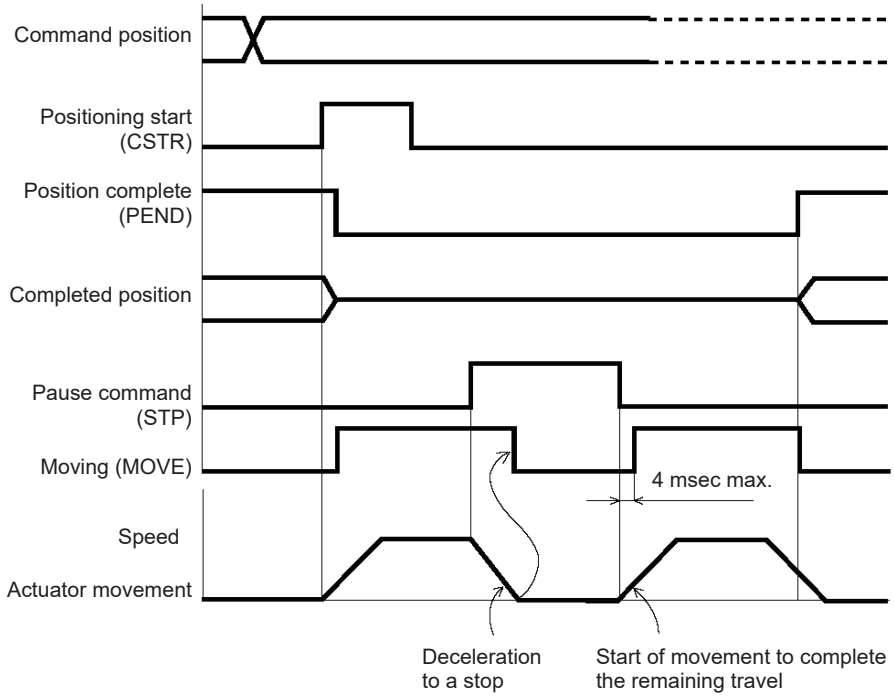

Changing the alarm reset (RES) bit to “1” while the actuator is paused will cancel the remaining travel. When a cancellation of the pause command (STP) is recognized thereafter, the position complete signal (PEND) will turn “1” in approx. 1 msec.
(The remaining travel will be cancelled upon detection of the leading edge of the reset signal.)

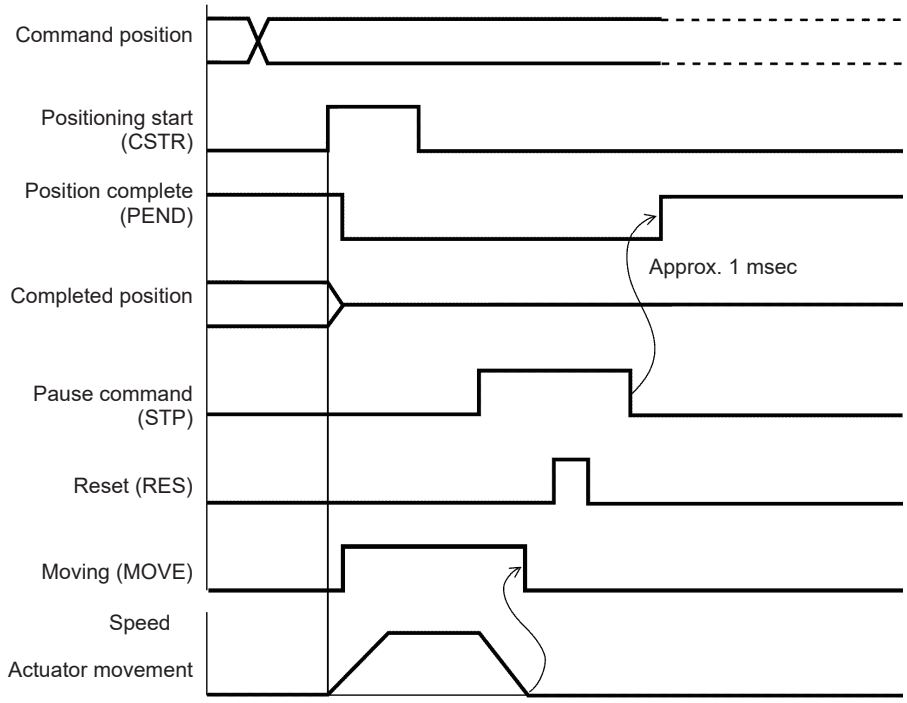

5.3.7 Speed Change during Movement

Speed control involving multiple speed levels is possible in a single operation. The actuator speed can be decreased or increased at a certain point during movement.
However, the position at which to implement each speed change must be set.

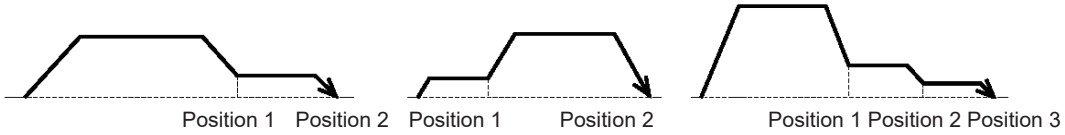

The speed change operation explained above is useful when, among others, the load is made of soft material or is a bottle or other shape that easily topples and you don't want to give vibration or shock to the work part when the actuator stops.

(Example) Move the actuator to position 2 (300 mm from the home) at 200 mm/sec until interim position 1 (200 mm from the home) and at 20 mm/sec thereafter.

Example of position table

No	Position [mm]	Speed [mm]	Acceleration [G]	Deceleration [G]	Push [%]		Positioning band [mm]		Comment
0	*	*	*	*	*		*		
1	200.00	200.00	0.30	0.30	0		20.00		
2	300.00	20.00	0.30	0.30	0		0.10		

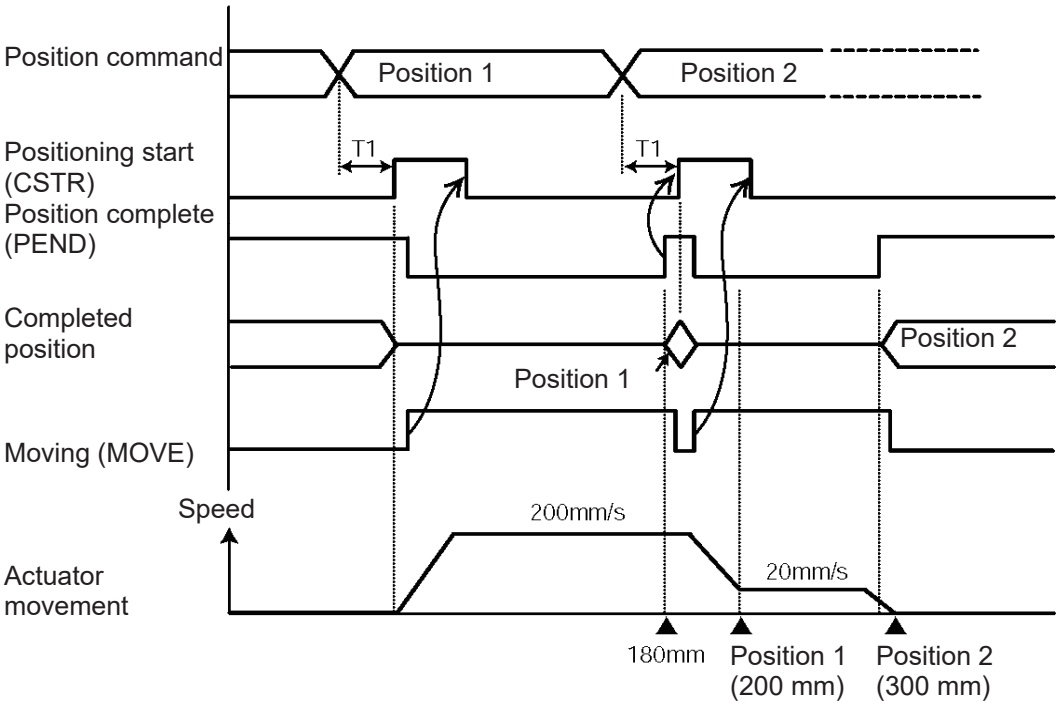

*T1: Set to T1 ≥ 0 (ms) by considering the scan time of the host controller.

(Note) If a pause command is issued while home return is in progress, the movement command will be held if the actuator has not yet contacted the mechanical end. If the actuator has already contacted the mechanical end and reversed, home return will be performed again from the beginning.

■ Alarm reset (RES)

Alarms will be reset at the “0” → “1” leading edge of this signal bit.
If any alarm remains whose cause is not yet removed, the same alarm will generate again.
If an alarm reset is performed while the actuator is paused, the remaining travel will be cancelled.

⚠ Caution: [1] When the start (CSTR) signal is changed to “1,” the position complete (PEND) bit will turn “1,” while the moving (MOVE) bit will turn “1.”
Change the start (CSTR) signal bit to “1” after confirming that the moving (MOVE) signal bit has turned “1.”
[2] Setting a wider positioning band for position 1 will allow for smooth speed change without causing the actuator to stop.

5.3.8 Operation at Different Acceleration and Deceleration

(1) When the actuator is used in the position number specification mode, acceleration and deceleration can be set differently in the position table.
(2) Numerical specification mode
Acceleration/deceleration data (set in the register 9906H) becomes effective when the data is received. To set a deceleration different from an acceleration, therefore, change the acceleration/deceleration data while the actuator is moving.

(Example)

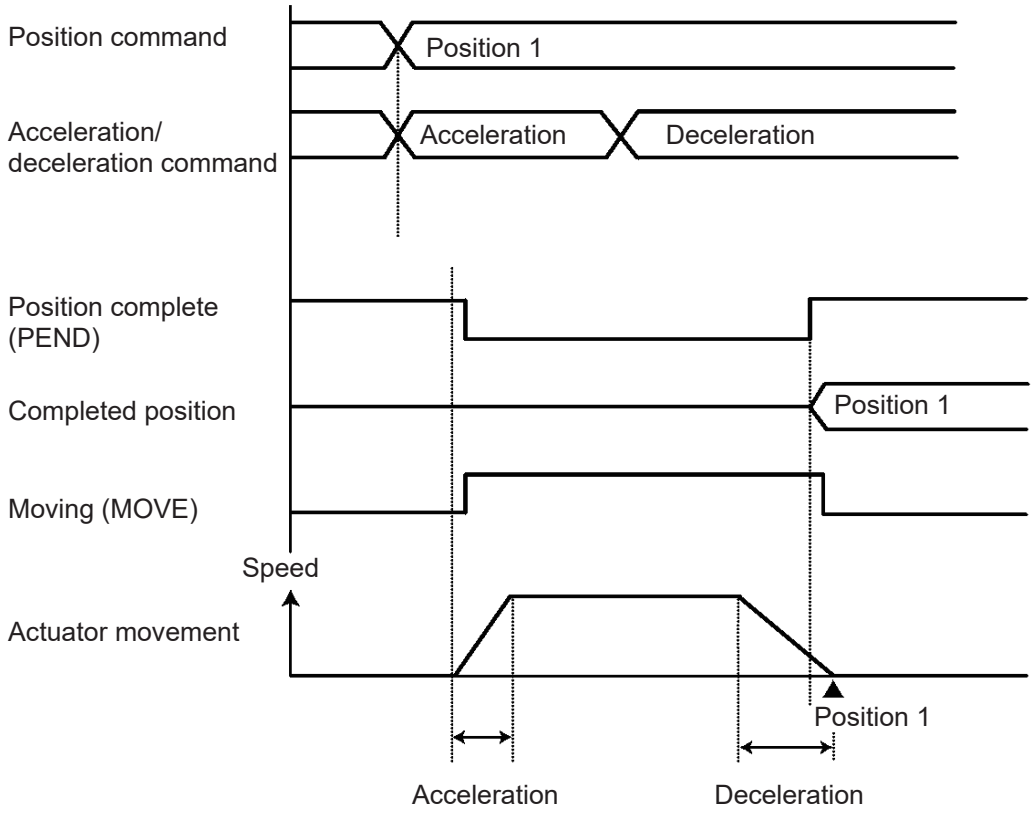

5.3.9 Zone Signal

This signal is output (the bit turns “1”) when the current actuator position is inside the specified zone. The zone signal can be used for the following purposes:
[1] As an interlock signal to prevent contact with peripheral equipment
[2] As a trigger signal for peripheral equipment to shorten the tact time
[3] For determining if the actuator has missed the work part during push & hold operation
[4] To determine if the actuator has reached the final point of constant pitch feed over aligned work parts
(Note) In constant pitch feed, the “Position” field of the position table indicates an incremental travel. However, the zone must be set using absolute coordinates with respect to the home.

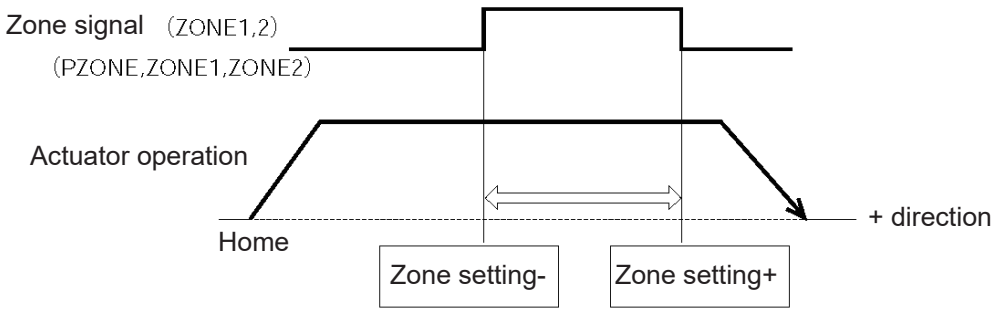

Setting	Zone signal	Position number specification mode	Numerical specification mode
Individual zone boundaries in the position table	Position zone output PZONE	○	x
Zone boundary 1 user parameters (Parameter Nos. 1 and 2)	Zone output 1 ZONE1	○	○
Zone boundary 2 user parameters (Parameter Nos. 23 and 24)	Zone output 2 ZONE2	○	○

* The zone signal is output to the zone status register (address 9013H).
When the actuator enters the zone, the bit will turn “1.” The bit remains “0” when the actuator is outside the zone.
This signal becomes effective after completion of home return. It will remain effective even when the servo is off, as long as home return has been completed.

5.3.10 Pitch Feed by Incremental Specification

A target position can be specified in the position table using an incremental travel. This function is useful in operation involving multiple positioning points set apart by an equal distance (constant pitch feed).

(1) Operation example in the position number specification mode
The following example explains how to perform positioning at a 50-mm pitch, starting from position No. 1. In this case, create the position table shown below. Whether the operation has completed is determined by the PLC by keeping a count of individual movements. The zone signal can be used to double-check the completion of operation.

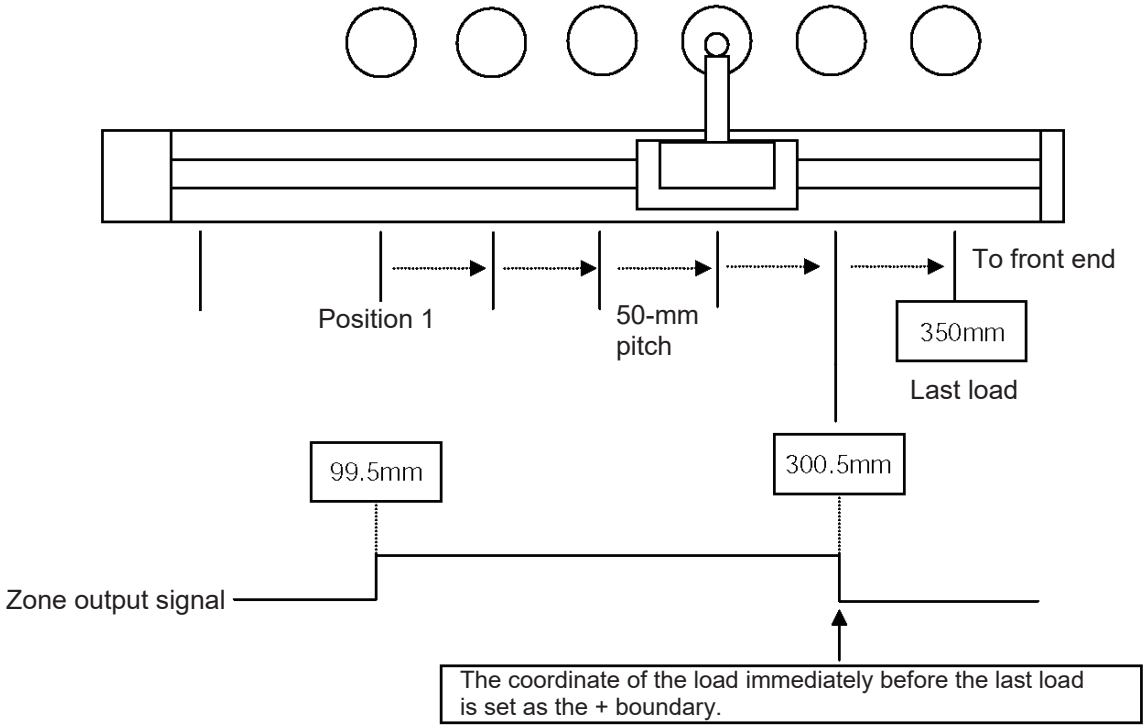

Example of position table

No	Position [mm]	Zone+ [mm]	Zone- [mm]	Incremental	Comment
0	*	*	*	0	
1	100.00	300.50	99.50	0	
2	50.00	300.50	99.50	1	

* On the teaching pendant screen, this symbol indicates that the data is specified in the incremental mode.

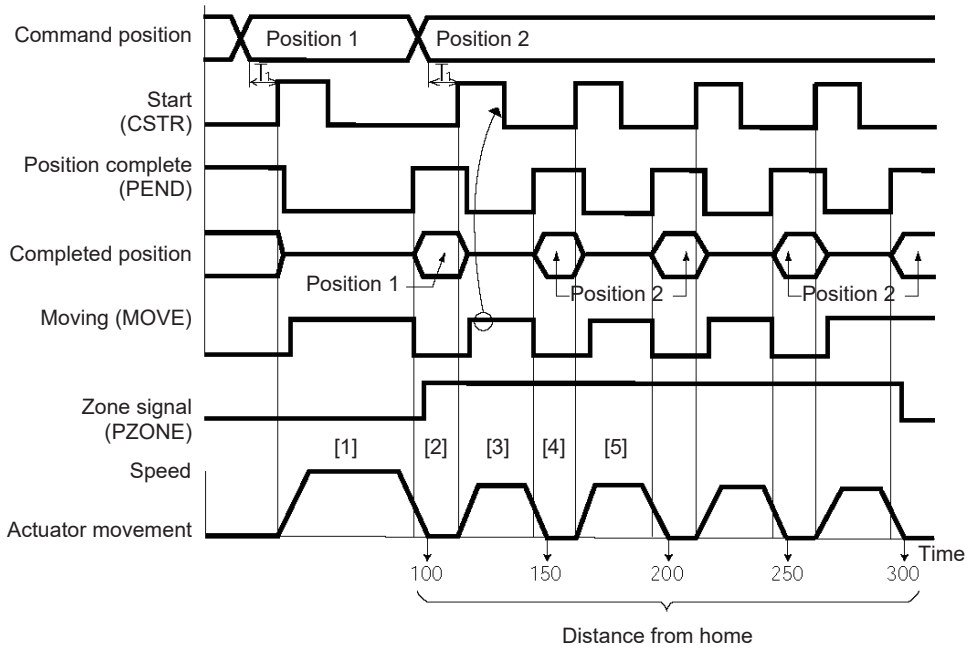

*T1: Set to T1 ≥ 0 (ms) by considering the scan time of the host controller.

[Explanation of operation]

[1] Perform positioning operation to position 1 (100.00 mm).

[2] When the positioning to position 1 has completed, the position complete (PEND) bit turns “1.” The zone (PZONE) signal bit also turns “1.”
Switch the position number from 1 to 2, and change the start (CSTR) bit to “1.”

[3] The moment the actuator starts moving, the position complete (PEND) bit changes from “1” to “0” and the moving (MOVE) bit changes from “0” to “1.” After confirming that MOVE has turned “1,” change the start (CSTR) bit to “0.”

[4] After the actuator has moved 50 mm, again the position complete (PEND) bit turns “1” and the moving (MOVE) bit turns “0.” The PLC increments its movement count by 1.
Next, change the start (CSTR) bit to “1” for the second 50-mm movement.

[5] Repeat steps [3] and [4] hereafter.

The PLC checks the zone (PZONE) signal status upon completion of positioning. If the signal bit is “0,” the PLC will determine that the position of the last work part has been reached.
If the count kept by the PLC does not match the zone signal status, signal timings may not be synchronized.

(2) Note on positioning operation

If a start signal is input after selecting and inputting a position number by incremental specification while the actuator is performing positioning operation, the actuator will move to the position representing the initial position plus the incremental travel. (If the specified incremental travel is a negative value, the actuator will move to the position representing the initial position minus the specified travel.)

Example)Inputting a start signal for position 2 while the actuator is moving to position 1 will cause the actuator to move to the position 40 mm from the home.

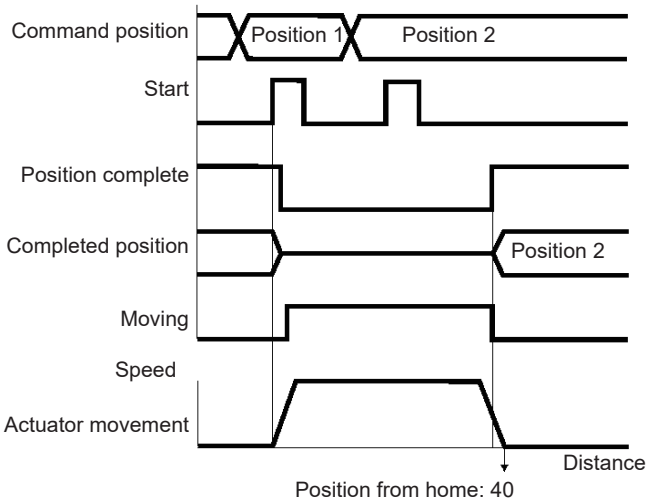

<Position table on teaching pendant>

No.	Position	Speed
0	*	*
1	30	100
2	10	100
⋮	⋮	⋮

If a start signal is input multiple times for a position number by incremental specification while the actuator is performing positioning operation, the actuator will move to the position representing the initial position plus the "incremental travel x number of times the signal was input."

Example)Inputting a start signal twice for position 2 while the actuator is moving to position 1 will cause the actuator to move to the position 50 mm from the home.

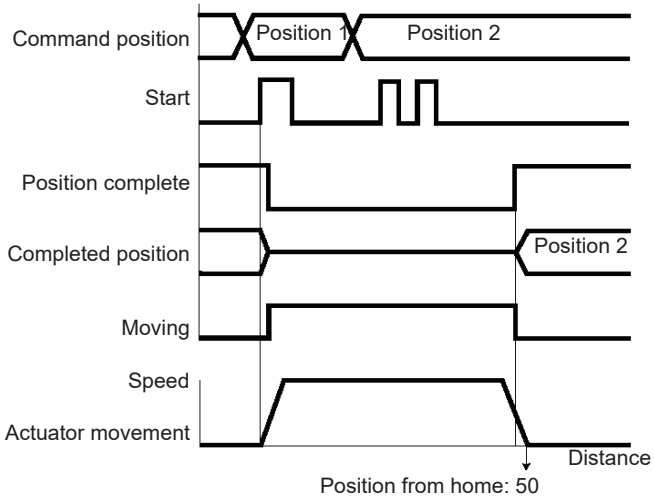

(3) Note on push & hold operation

If a start signal is input after selecting and inputting a position number (for push & hold operation) by incremental specification while the actuator is moving in the push & hold mode, the actuator will move by the incremental travel from where the start signal was input. Therefore, the end position will become indeterminate.

Example)Inputting a start signal for position 2 while the actuator is moving to position 1 in the push & hold mode will cause the actuator to move to the position 10 mm from where the start signal was input.

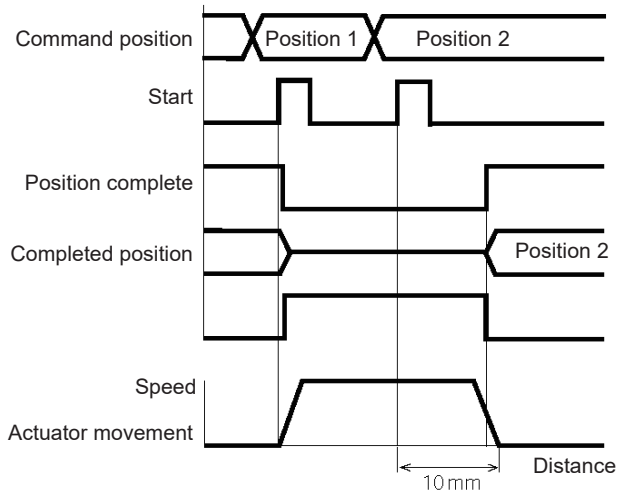

<Position table on teaching pendant>

No.	Position	Speed
0	*	*
1	50	100
2	10	100
⋮	⋮	⋮

5.3.11 Power-Saving Mode at Standby Positions

One general feature of pulse motors is that their holding current is greater than AC servo motors in a standstill state.
Therefore, we provide a power-saving mode to reduce power consumption in situations where the actuator remains standstill for a long period at a standby position.
Use this function after confirming that it will not present problems to any part of your system.
Specifically, the full servo control mode can be selected for saving power in the following three conditions:

(1) When the actuator stands by with the servo on after the power has been turned on (before home return is completed)

(2) When the actuator stands by after the home return operation effected by the HOME input signal has completed

(3) When the actuator stands by after reaching the target position

Set “0” or “4” in parameter No. 53.

	Setting
Disable power-saving mode (complete stop)	0
Full servo control mode	4

■ Full servo control mode
The pulse motor is servo-controlled to reduce the holding current.
Although the exact degree of current reduction varies depending on the actuator model, load condition, etc., the holding current decreases to approx. one-half to one-fourth.
Since the servo remains on, no position deviation occurs.
The actual holding current can be checked in the current monitor screen of the PC software.
Take note that micro-vibration or noise may occur in certain conditions where external force is applied, or depending on the position where the actuator has stopped.
If micro-vibration or noise presents problem, do not use this mode.

⚠ Caution: In push & hold operation, the full servo control mode becomes ineffective once the operation has completed successfully. If the actuator has missed the work part, the full servo control mode becomes effective.

6. Parameter Settings

6.1 Parameter Table

Parameters are classified into four types according to their content.
Category: a: Parameter relating to the actuator stroke range
b: Parameter relating to the actuator operating characteristics
c: Parameter relating to the external interface
d: Servo gain adjustment

No.	Category	Symbol	Name	Unit	Default factory setting
1	a	ZONM	Zone boundary 1+	mm	Effective actuator length
2	a	ZONL	Zone boundary 1–	mm	Effective actuator length
3	a	LIMM	Soft limit+	mm	Effective actuator length
4	a	LIML	Soft limit–	mm	Effective actuator length
5	a	ORG	Home return direction (0: Reverse/1: Forward)	-	(In accordance with the specification at the time of order)
6	b	PSWT	Push & hold stop judgment period	msec	255
7	d	PLG0	Servo gain number	-	Set individually in accordance with the actuator characteristics.
8	b	VCMD	Default speed	mm/sec	Set individually in accordance with the actuator characteristics.
9	b	ACMD	Default acceleration/deceleration	G	Set individually in accordance with the actuator characteristics.
10	b	INP	Default positioning band (in-position)	mm	0.10
12	b	SPOW	Current-limiting value at standstill during positioning	%	Set individually in accordance with the actuator characteristics.
13	b	ODPW	Current-limiting value during home return	%	Set individually in accordance with the actuator characteristics.
16	c	BRSL	SIO communication speed	bps	230400
17	c	RTIM	Minimum delay time for slave transmitter activation	msec	5
22	a	OFST	Home return offset	mm	Set individually in accordance with the actuator characteristics.
23	a	ZNM2	Zone boundary 2+	mm	Effective actuator length
24	a	ZNL2	Zone boundary 2–	mm	Effective actuator length
28	b	PHSP1	Default direction of excited-phase signal (0: Reverse/1: Forward)	-	Set individually in accordance with the actuator characteristics.
29	b	PHSP2	Excited-phase signal detection time	msec	Set individually in accordance with the actuator characteristics.
31	d	VLPG	Speed loop proportional gain	-	Set individually in accordance with the actuator characteristics.
32	d	VLPT	Speed loop integral gain	-	Set individually in accordance with the actuator characteristics.
33	d	TRQF	Torque filter time constant	-	Set individually in accordance with the actuator characteristics.
34	b	PSHV	Push speed	mm/sec	Set individually in accordance with the actuator characteristics.
35	b	SAFV	Safety speed	mm/sec	100
39	c	FPIO	Output mode of position complete signal (0: PEND/1: INP)	-	0 [PEND]
45	c	SIVM	Silent interval multiplication factor	times	0 (Multiplication factor is not applied)
46	b	OVRD	Speed override	%	100
53	b	CTLF	Default standstill mode	-	0 [Complete stop]

(Note) The numbers are displayed in the PC software, but not on the teaching pendant.
Skipped numbers are not used and therefore omitted.
The classification codes are provided for the sake of convenience and are not displayed either in the PC software or on the teaching pendant.

6.2 Detailed Explanation of Parameters

If a parameter has been changed, always restart the controller using a software reset command or by reconnecting the power.

6.2.1 Parameters Relating to the Actuator Stroke Range

● Soft limit (No. 3/4 LIMM/LIML)

Set the soft limit in the positive direction in parameter No. 3, and that in the negative direction in parameter No. 4. The factory setting for the soft limits conforms to the effective actuator length. Change the settings, as necessary, to prevent crash with an obstacle or when the actuator must be stroked slightly beyond its effective length.
A wrong soft limit setting will cause the actuator to crash into the mechanical end, so exercise due caution.
The minimum setting unit is “0.01 [mm].”

(Note) To change a soft limit, set a value corresponding to 0.3 mm outside of the effective range.
Example)Set the effective range to between 0 mm and 80 mm
Parameter No. 3 (positive side) 80.3
Parameter No. 4 (negative side) –0.3

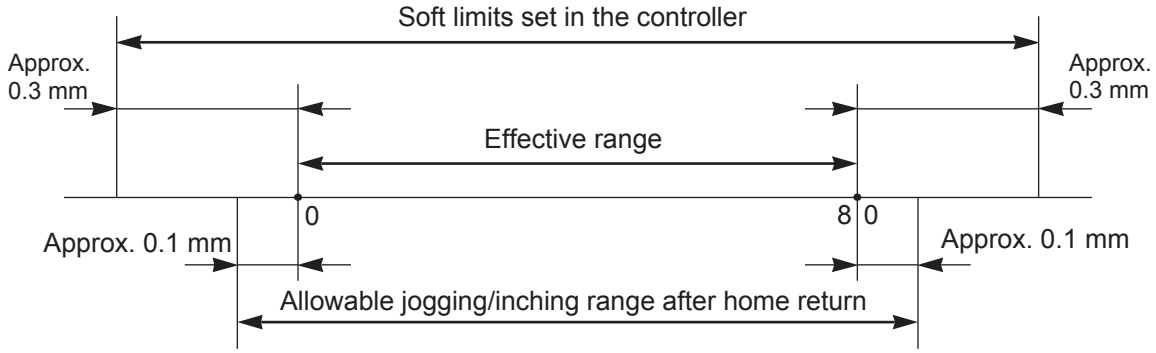

● Home return direction (No.5 ORG)

Unless specified by the user, the home return direction is set to the motor direction at the factory.
Should a need arise to change the home direction after the actuator has been assembled into your system, reverse the setting in parameter No. 5 between “0” and “1.”
If necessary, also change the parameters for home return offset, soft limits and direction of excited-phase signal detection.

● Home return offset (No.22 OFST)

The controller is shipped from the factory with an optimal value set in parameter No. 22, so the distance from each mechanical end to the home becomes uniform.
The minimum setting unit is “0.01 [mm].”
The home return offset can be adjusted in the following conditions:

[1] Want to align the actuator home and the system’s mechanical home after the actuator has been assembled into the system
[2] Want to set a new home after reversing the factory-set home direction
[3] Want to eliminate a slight deviation generated after replacing the actuator

⚠ Caution: If the home return offset has been changed, the soft limit parameters must also be adjusted accordingly.

● Zone boundary (1: No.1/2 ZONM/ZONL, 2: No.23/24 ZNM2/ZNL2)

These parameters set the zone in which the zone output signal (ZONE1 or ZONE2) turns ON.
The zone output signal turns ON when the current position is inside the negative (–) boundary and positive (+) boundary settings.
For the ZONE1 signal, set the + boundary in parameter No. 1 and – boundary in parameter No. 2.
For the ZONE2 signal, set the + boundary in parameter No. 23 and – boundary in parameter No. 24.
The minimum setting unit is “0.01 [mm].”

Example) Use ZONE1 as an intermediate LS for a range of 100 to 200 mm, and ZONE2 for quick position check covering a range of 270 to 275 mm, on an actuator having a 300-mm stroke.
Parameter No. 1 (+) 200 / Parameter No. 2 (–) 100
Parameter No. 23 (+) 275 / Parameter No. 24 (–) 270

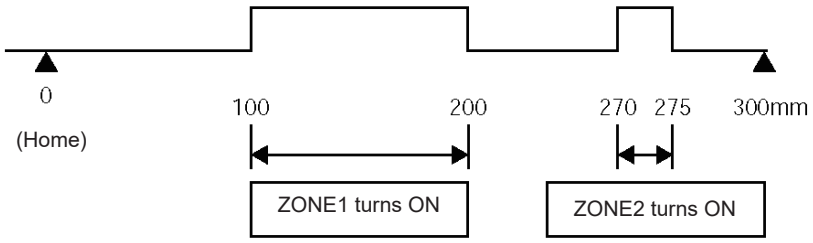

6.2.2 Parameters Relating to the Actuator Operating Characteristics

- Default speed (No.8 VCMD)

The factory setting is the rated speed of the actuator.
When a target position is set in an unregistered position table, the setting in this parameter will be used as the speed data for the applicable position number.
To reduce the default speed from the rated speed, change the setting in parameter No. 8.

- Default acceleration/deceleration (No.9 ACMD)

The factory setting is the rated acceleration/deceleration of the actuator.
When a target position is set in an unregistered position table, the setting in this parameter will be used as the acceleration/deceleration data for the applicable position number.
To reduce the default acceleration/deceleration from the rated acceleration/deceleration, change the setting in parameter No. 9.

- Default positioning band (in-position) (No.10 INP)

The factory setting is “0.10 [mm].”
When a target position is set in an unregistered position table, the setting in this parameter will be used as the positioning band data for the applicable position number.
Increasing the default positioning band will allow the position complete signal to be output early. Change the setting in parameter No. 10, as necessary.

- Current-limiting value during home return (No.13 ODPW)

The factory setting conforms to the standard specification of the actuator.
Increasing this setting will increase the home return torque.
This setting need not be changed in normal conditions of use. However, if an increased slide resistance causes the home return to complete before the correct position depending on the affixing method, load condition or other factor when the actuator is used in a vertical application, the value set in parameter No. 13 must be increased.
(Do not increase the value beyond 75%.)

- Current-limiting value at standstill during positioning (No.12 SPOW)

The factory setting conforms to the standard specification of the actuator.
Increasing this setting will increase the holding torque at standstill.
This setting need not be changed in normal conditions of use. However, to prevent hunting caused by large external force applied while the actuator is at standstill, the value set in parameter No. 12 must be increased.
(Do not increase the value beyond 70%.)

- Speed override (No.46 OVRD)

Use this parameter when the actuator needs to be moved at a slower speed to prevent danger when the system is initially started for test operation.
When movement commands are issued from the PLC, the specified moving speed can be overridden by the value set in parameter No. 46.
Actual moving speed = [Specified speed] x [Value of parameter No. 46] ÷ 100

Example)	Specified “speed”	500 (mm/s)
	Value of parameter No. 46	20 (%)

Under the above settings, the actual moving speed becomes 100 mm/s.
The minimum setting unit is “1 [%],” while the input range is “1 to 100 [%].” The factory setting is “100 [%].”

(Note) This parameter is ignored for movement commands issued from a PC or teaching pendant, or movement commands specified directly as numerical values.
If a PC or teaching pendant is connected, a desired speed ratio can be set and applied to actuator operation from the PC or teaching pendant.

● Default direction of excited-phase signal detection (No.28 PHSP1)
When the servo is turned on for the first time after a power on, excited phase is detected. This parameter defines the direction of this detection.
The parameter need not be changed in normal conditions. In certain situations, such as when the actuator was contacting a mechanical end or obstacle when the power was turned on and cannot be moved by hand, change the direction that allows the motor to operate smoothly.
To do this, set parameter No. 28 to “0” or “1.” If the detection direction should be the same as the home return direction, specify the same value currently set in parameter No. 5 (Home return direction).
To set a direction opposite to the home return direction, specify the value different from the one currently set in parameter No. 5 (Home return direction).

(Example 1) Power was turned on when the slider was contacting the bottom mechanical end in a configuration where the actuator is installed vertically with the motor at the top.

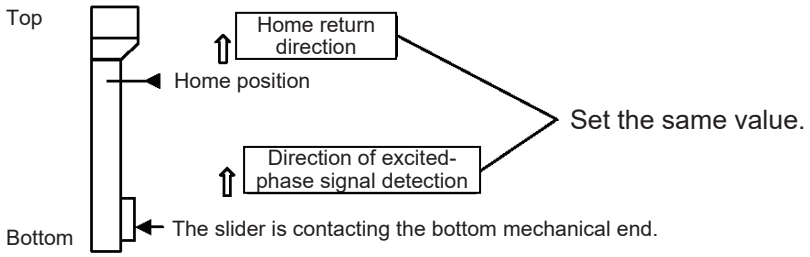

(Example 2) Power was turned on when the slider was contacting the bottom mechanical end in a configuration where the actuator is installed vertically with the motor at the bottom.

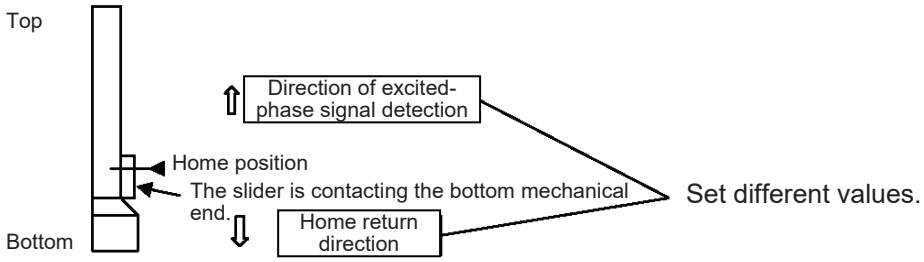

● Excited-phase signal detection time (No.29 PHSP2)
When the servo is turned on for the first time after a power on, excited phase is detected. This parameter defines the time of this detection.
The parameter need not be changed in normal conditions, because a detection time appropriate for the standard specification of the actuator has been set at the factory.
Should an excitation detection error or abnormal operation occur when the servo is turned on for the first time after a power on, one remedial action that can be taken is to change the detection time set in parameter No. 29.
If you wish to change this parameter, contact IAI beforehand.

● Safety speed (No.35 SAFV)
This parameter defines the feed speed to be applied during manual operation.
The factory setting is “100 [mm/sec].”
To change this speed, set an optimal value in parameter No. 35.
Take note that the maximum speed is 250 mm/sec and that you should set a speed not exceeding this value.

- Default standstill mode (No.53 CTLF)

This parameter defines the power-saving mode to be applied when the actuator stands by for a long time while the machine is operating; the actuator stands by for a long time after completing home return operation; or the actuator stands by for a long time after completing positioning operation in the numerical specification mode. Define whether to enable or disable power-saving in parameter No. 53.

	Setting
All power-saving modes are disabled.	0
Full servo control mode	4

The factory setting is “0 [Disable].”

Full servo control mode

The pulse motor is servo-controlled to reduce the holding current.
Although the exact degree of current reduction varies depending on the actuator model, load condition, etc., the holding current decreases to approx. one-half to one-fourth.
Since the servo remains on, no position deviation occurs.
The actual holding current can be checked in the current monitor screen of the PC software.

● Push speed (No.34 PSHV)

This parameter defines the push speed to be applied after the actuator reaches the target position in push & hold operation.
Before the shipment, this speed has been set to a default value appropriate for the characteristics of the actuator. Set an appropriate speed in parameter No. 34 by considering the material and shape of the work part, and so on. Take note that the maximum speed is limited to 20 [mm/sec] even on high-speed types. Use the actuator at push speeds not exceeding this level.

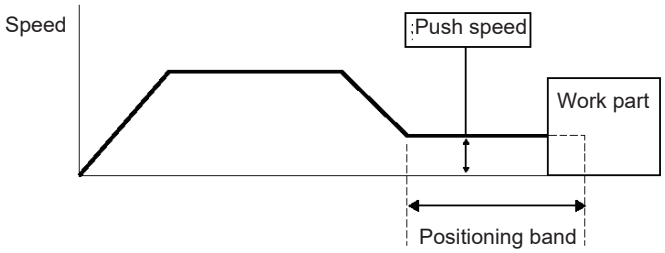

⚠ Caution: It is recommended that you set the push speed to 5 mm/sec or above to minimize the negative effect of push force variation.

● Push & hold stop judgment period (No.6 PSWT)

This parameter is used as a condition for determining that the work part was contacted and thus the push & hold operation has completed.
As for the specific method of judgment, the push & hold operation is deemed to have completed if the specified current-limiting value has been retained for the time set in parameter No. 6.
Set an optimal time matching the current-limiting value, by considering the material and shape of the work part, and so on.
The minimum setting unit is “1 [msec],” while the maximum value is “9999 [msec].” The factory setting is “255 [msec].”
(Note) If the work part has shifted and the current has changed during the push & hold judgment, the judgment follows the timing chart shown below. This example assumes a judgment period of 255 msec.

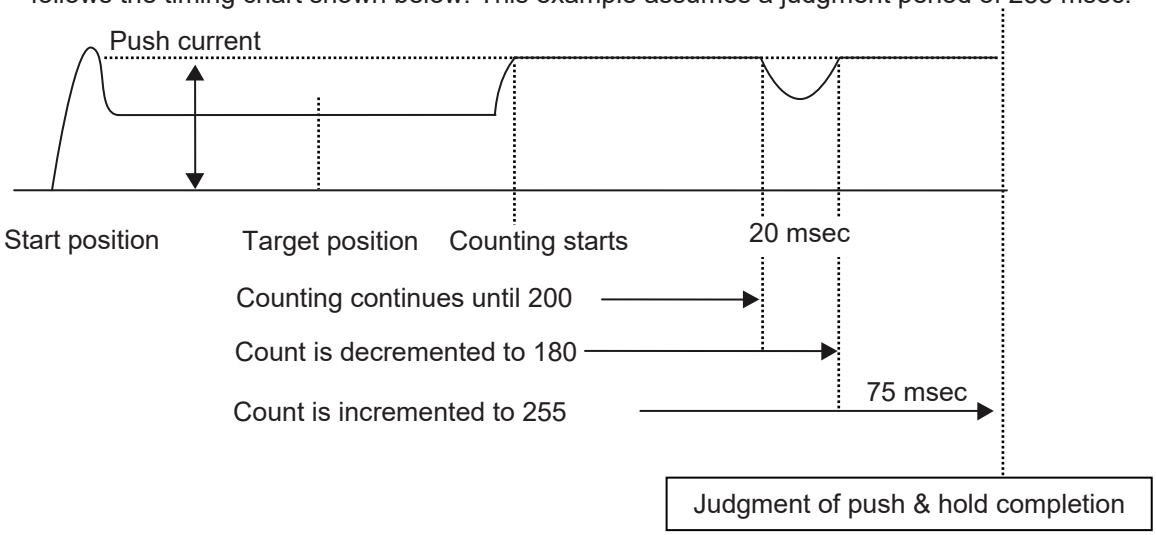

After reaching the push current, it is maintained for 200 msec. The current drops during the subsequent 20-msec period, and accordingly the count is decremented by 20. Therefore, when the operation is resumed the count will start from 180. Since the count will reach 255 after 75 msec at the push current, the controller will determine that the push & hold operation has completed.
In this example, the total judgment period is 295 msec.

6.2.3 Parameters Relating to the External Interface

● Output mode of position complete signal (No.39 FPIO)

This parameter defines the status of position complete signal to be applied if the servo turns off or “position deviation” occurs while the actuator is standing still after completing positioning.
The following two conditions can be considered:
[1] The position has deviated, due to external force and while the servo was on, beyond the specified “positioning band.”
[2] The position has deviated, due to external force and while the servo was off, beyond the specified “positioning band.”
To support the above two conditions, how the “position complete status” is monitored can be specified flexibly in accordance with the characteristics of the system or sequence circuit on the PLC side.
Among others, it is recommended that this parameter be set to “1 [INP]” if position complete signals are to be used like auto-switches on an air cylinder.
The ON/OFF status of each position complete signal is controlled as follows in accordance with the setting of parameter No. 39.

Setting of parameter No. 39	Description
0 [PEND]	[1] When the servo is on The position complete signal remains ON even after the current position has exited the range set by the specified “positioning band” with respect to the target position. [2] When the servo is off The position complete signal is OFF unconditionally regardless of the current position.
1 [INP]	Regardless of the servo on/off status, the position complete signal turns ON if the current position is within the range set by the specified “positioning band” with respect to the target position, and turns OFF if the current position is outside this range. * In this mode, position complete signals are used just like auto-switches on an air cylinder.

The factory setting is “0 [PEND].”

● SIO communication speed (No.16 BRSL)

If specified, this parameter sets the communication speed to be applied when the actuator is controlled via serial communication by means of the PLC’s communication module.
Set an appropriate value in parameter No. 16 in accordance with the specification of the communication module.
You can select “9600,” “19200,” “38400,” “115200” or “230400” bps.
The factory setting is “230400 [bps].”

● Minimum delay for slave transmitter activation (No.17 RTIM)

If specified, this parameter sets the minimum delay time after the controller has received a command until the transmitter is activated, when serial communication is performed by means of the PLC’s communication module.
The factory setting is “5 [msec].” However, if the specification of the communication module is 5 msec or above, set the necessary time in parameter No. 17.

- Silent interval multiplication factor (No.45 SIVM)

It is applied to controllers of RS485 serial communication type.
If specified, this parameter defines the multiplication factor to be applied to the silent interval time for delimiter judgment in the RTU mode.
The default setting is the communication time corresponding to 3.5 characters in accordance with the Modbus specification.
This setting need not be changed for normal operations performed with a PC or teaching pendant.
If the scan time of the PLC is not optimal and the character transmission interval exceeds the silent interval, the silent interval time can be extended using parameter No. 45.
The minimum setting unit is “1 [time],” while the input range is “0 to 10.” If “0” is set, no multiplication factor is applied.

6.2.4 Servo Gain Adjustment

Before the shipment, the servo has been adjusted in accordance with the standard specification of the actuator. Accordingly, the servo settings need not be changed in normal conditions.
Nonetheless, the parameters relating to servo adjustment are made accessible by the customer so that speedy actions can be taken in situations where vibration or noise occurs due to the affixing method of the actuator, load condition, or the like.
In particular, custom types (having a longer ball screw lead or stroke than standard types) are more vulnerable to vibration and noise due to external conditions.
In such a case, the following parameter settings must be changed. Contact IAI beforehand.

- Servo gain number (No.7 PLG0)

Parameter No.	Unit	Input range	Default
7	5 rad/sec	0 ~ 31	6

This parameter determines the response when a position control loop is used.
Increasing the set value improves the tracking performance with respect to the position command.
However, increasing the value excessively increases the chances of overshoot.
If the value is small, the tracking performance with respect to the position command drops and positioning takes a longer time.

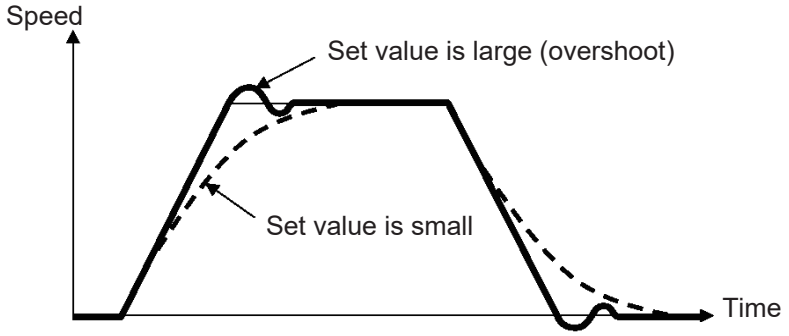

- Speed loop proportional gain (No.31 VLPG)

Parameter No.	Unit	Input range	Default
31	---	1 ~ 27661	Set individually in accordance with the actuator characteristics.

This parameter determines the response when a speed control loop is used.
Increasing the set value improves the tracking performance with respect to the speed command (i.e., servo rigidity increases).
The greater the load inertia, the larger this value should be.
However, increasing the value excessively makes the actuator more vulnerable to overshooting or shaking, leading to mechanical vibration.

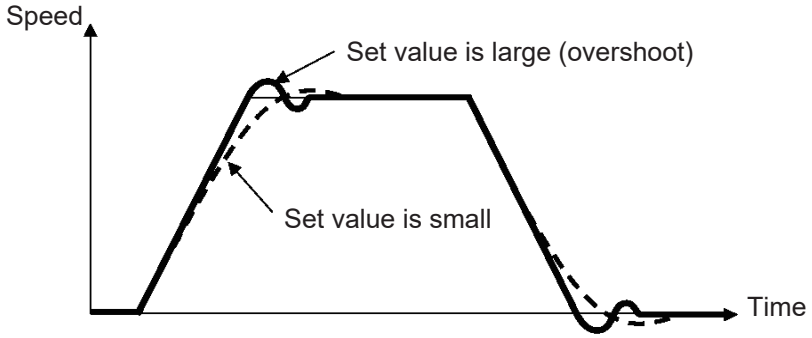

- Speed loop integral gain (No.32 VLPT)

Parameter No.	Unit	Input range	Default
32	---	1 ~ 217270	Set individually in accordance with the actuator characteristics.

This parameter is used to determine the response of the speed control loop.
Reducing the set value lowers the response to speed commands, meaning that the reactive force that generates in response to load change becomes smaller. A smaller set value also results in poorer compliance with position commands, causing the positioning time to become longer.
If the set value is excessive, on the other hand, the actuator may overshoot or oscillate, rendering the mechanical parts more prone to vibration.

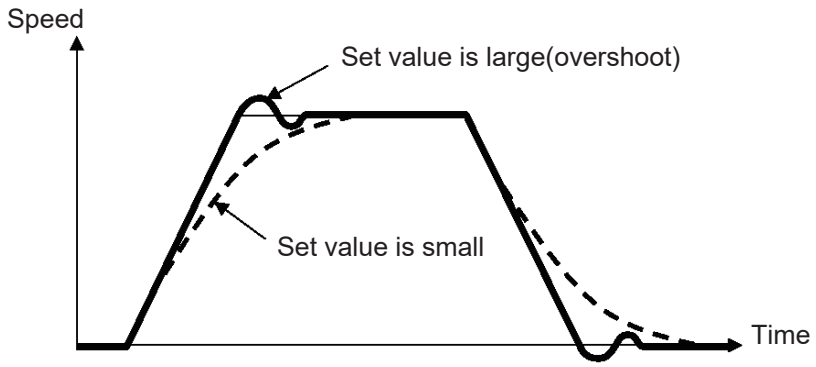

- Torque filter time constant (No.33 TRQF)

Parameter No.	Unit	Input range	Default
33	---	1 ~ 2500	Set individually in accordance with the actuator characteristics.

This parameter determines the filter time constant for torque commands.
If the resonance frequency of the machine is smaller than the response frequency of the servo loop, the motor vibrates.
This mechanical resonance can be suppressed by increasing the value set in this parameter.
However, increasing the value excessively may reduce the stability of control.

7. Troubleshooting

7.1 Action to Be Taken upon Occurrence of Problem

Upon occurrence of a problem, take appropriate action according to the procedure below in order to ensure speedy recovery and prevent recurrence of the problem.

a) Check the status indicator lamps.
Illuminating in green --- The servo is ON.
Illuminating in red --- An alarm is present or the motor drive power is cut off.

b) Check for error in the host controller.

c) Check the voltage of the main 24-VDC power supply.

d) Check for alarm.
Confirm the details of error on the PC or teaching pendant.

e) Check the cables for connection error, disconnection or pinching.
Before performing a continuity check, turn off the power (to prevent a runaway actuator) and disconnect the cables (to prevent accidental power connection due to a sneak current path).

f) Check the I/O signals.

g) Check the noise elimination measures (grounding, installation of surge killer, etc.).

h) Review the events leading to the occurrence of problem, as well as the operating condition at the time of occurrence.

i) Check the serial numbers of the actuator.

j) Analyze the cause.

k) Take action.

Please check items a) through i) before contacting IAI.

7.2 Alarm Level Classification

Alarms output from the controller are classified into two levels according to the symptoms they represent.

Alarm level	ALM lamp	Failure status register	What happens when alarm generates	How to reset
Operation cancellation	On (Red)	ALMH is “1”	The actuator decelerates to a stop and then the servo turns OFF.	• Perform an alarm reset from a PC/teaching pendant. • Input a RES signal from the PLC.
Cold start	On (Red)	ALMH is “1”	The actuator decelerates to a stop and then the servo turns OFF.	• Perform a software reset from a PC/teaching pendant. • Reconnect the power.

7.2.1 How to Reset Alarms

Enter the alarm reset input signal (RES).
After the ALMH signal bit has returned to “0,” confirm that the ALMH bit is “0,” and then change the RES signal bit to “0.”

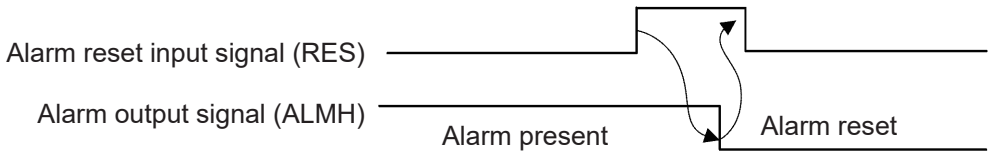

⚠ Caution: Before resetting an alarm, always identify and remove the cause of the alarm.
If the cause cannot be removed or the alarm still persists after removing the cause, contact IAI.
If the same error occurs again after resetting the alarm, the problem that caused the alarm in the first place is still present.

7.3 Alarm Description and Cause/Action

(1) Operation-cancellation level alarms

Code	Error name	Cause/Action
080	Movement command at servo off	Cause: A movement command was issued by numerical specification when the servo was off. Action: Issue a movement command after confirming that the servo is on (SRDY or PEND is “1”).
083	Numerical command before home return	Cause: A numerical absolute position command was issued when home return was not yet completed. (This does not present any problem in the position number specification mode.) Action: Issue a movement command by numerical specification after performing home return operation and confirming the complete signal (HEND) has turned ON.
084	Movement command during home return	Cause: A movement command was issued by numerical specification while home return was still in progress. Action: Issue a movement command after performing home return operation and confirming the complete signal (HEND) has turned ON.
085	Position number error during movement	Cause: A position number not yet registered in the position table was specified in the position number specification mode. Action: Check the position table again.
090	Soft reset at servo on	Cause: A soft reset command was received when the servo was on. Action: Send a soft reset command to the controller after confirming that the servo is off (SRDY is “0”).

Code	Error name	Cause/Action
0A1	Parameter data error	Cause: The parameter data does not meet the specified input range. (Example) This alarm generates when a pair of values clearly has an inappropriate magnitude relationship, such as when the soft limit + setting is 200.3 mm, while the soft limit – setting is 300 mm. Action: Change the settings to appropriate values.
0A2	Position data error	Cause: [1] A movement command was input when a target position was not yet set in the “Position” field. [2] The target position in the “Position” field is outside the soft limit range. Action: [1] Set a target position first. [2] Change the target position to a value inside the soft limit range.
0A3	Position command data error	Cause: The speed or acceleration/deceleration specified in the numerical command exceeds the maximum value that can be set. Action: Change the applicable setting to an appropriate value.
0BE	Home return timeout	Cause: Home return does not complete within the period set in the applicable system parameter after the start of home return operation. (This alarm should not occur in normal operations.) Action: Inappropriate controller/actuator combination is a possible cause. Contact IAI.
0C0	Excessive actual speed	Cause: This alarm indicates that the motor speed exceeded the maximum speed set in the applicable system parameter. This alarm will not generate in normal operation, but may occur in the following conditions: [1] Large actuator slide resistance in certain area, or [2] Instantaneous increase in load due to application of external force, which may cause the load to decrease and actuator to move rapidly before a servo error is detected. Action: Check for abnormality in the assembly condition of mechanical parts. If the actuator is suspected to be the cause, please contact IAI.
0C1	Servo error	This alarm indicates that after receiving a movement command the motor is unable to operate for two seconds or more before reaching the target position. Cause: [1] Loose or disconnected connector of the motor extension cable [2] Brake cannot be released on a controller equipped with brake. [3] Large load due to application of external force [4] Large slide resistance of the actuator itself Action: [1] Check the wiring condition of the motor extension cable. [2] Check the wiring condition of the brake cable, and also turn on/off the brake release switch to check if a “click” sound is heard. [3] Check for abnormality in the assembly condition of mechanical parts. [4] If the load weight is normal, turn off the power and move the actuator by hand to check the slide resistance. If the actuator is suspected to be the cause, please contact IAI.

Code	Error name	Cause/Action
0C9	Excessive motor supply voltage	This alarm indicates that the motor supply voltage is excessive (24 V + 20%: 28.8 V or more). Cause: [1] High voltage of the 24-V input power supply [2] Faulty internal part of the controller Action: Check the voltage of the input power supply. If the voltage is normal, please contact IAI.
0CA	Overheating	The temperature around the power transistor in the controller is too high (95°C or above). Cause: [1] High ambient temperature [2] Defective internal part of the controller Action: [1] Lower the ambient temperature of the controller. If the action in [1] does not apply, contact IAI.
0CC	Abnormal control supply voltage	This alarm indicates that the voltage of the 24-V input power supply is excessive (24 V + 20%: 28.8 V or more). Cause: [1] High voltage of the 24-V input power supply [2] Defective internal part of the controller Action: Check the voltage of the input power supply. If the voltage is normal, please contact IAI.
0CE	Drop in control supply voltage	This alarm indicates that the voltage of the 24-V input power supply has dropped (24 V – 20%: 19.2 V or less). Cause: [1] Low voltage of the 24-V input power supply [2] Defective internal part of the controller Action: Check the voltage of the input power supply. If the voltage is normal, please contact IAI.

(2) Cold-start level alarms

Code	Error name	Cause/Action
0B8	Excitation detection error	This controller detects excited phase when the servo is turned on for the first time after a power on. This alarm indicates that the specified encoder signal level cannot be detected after the specified period of excitation. Cause: [1] Loose or disconnected connector of the motor extension cable [2] The brake cannot be released (if the actuator is equipped with a brake). [3] A large load is applied due to an external force. [4] The power was turned on when the actuator was contacting a mechanical end. [5] The slide resistance of the actuator itself is large. Action: [1] Check the wiring condition of the motor extension cable. [2] Check the wiring condition of the brake cable, and also turn on/off the brake release switch to check if a “click” sound is heard. [3] Check for abnormality in the assembly condition of mechanical parts. Increasing the value of parameter No. 29 (Excited-phase signal detection time) may be effective. If you wish to change the parameter setting, contact IAI beforehand. [4] Move the actuator away from the mechanical end, and then turn on the power again. Alternatively, change the value of parameter No. 28 (Default direction of excited-phase signal detection). [5] If the load weight is normal, turn off the power and move the actuator by hand to check the slide resistance. If the actuator is suspected to be faulty, please contact IAI.
0D8	Deviation overflow	The position deviation counter has overflowed. Cause: [1] The speed dropped due to external force, etc., while the actuator was moving. [2] Unstable excitation detection operation after the power has been turned on Action: [1] Check the load condition, such as if the work part is contacting any object around it or the brake is released, and remove the identified cause. [2] An overload condition is suspected, so review the load weight. After appropriate adjustment has been made, reconnect the power and perform home return.
0DC	Out-of-range error in push & hold operation	This alarm occurs when the actuator was pushed back to the target position after completion of push & hold operation, due to a strong push-back force of the work part. Review the overall settings of the system.

Code	Error name	Cause/Action
0F5	Verification error of data written to nonvolatile memory	When data was written to the nonvolatile memory, the written data is read and compared (verified) against the original data. This alarm indicates that the read data does not mach the original data written. Cause: [1] Faulty nonvolatile memory [2] The memory has been rewritten more than 100,000 times. (As a rough guideline, the nominal service life of the nonvolatile memory is 100,000 rewrites.) Action: If the alarm persists after reconnecting the power, contact IAI.
0F6	Timeout writing to nonvolatile memory	This alarm indicates that a response was not received within the specified time after writing the nonvolatile memory. Cause: [1] Faulty nonvolatile memory [2] The memory has been rewritten more than 100,000 times. (As a rough guideline, the nominal service life of the nonvolatile memory is 100,000 rewrites.) Action: If the alarm persists after reconnecting the power, contact IAI.
0F8	Damaged nonvolatile memory	Abnormal data was detected in the nonvolatile memory check upon start. Cause: [1] Faulty nonvolatile memory [2] The memory has been rewritten more than 100,000 times. (As a rough guideline, the nominal service life of the nonvolatile memory is 100,000 rewrites.) Action: If the alarm persists after reconnecting the power, contact IAI.
0FA	CPU error	The CPU is not operating normally. Cause: [1] Faulty CPU [2] Malfunction due to noise Action: If the alarm persists after reconnecting the power, contact IAI.

7.4 Messages Displayed during Operation Using the Teaching Pendant or PC Software

This section explains the warning messages that may be displayed during operation using the teaching pendant or PC software.

Code	Error name	Cause/Action
112	Invalid data	An inappropriate value was entered in a parameter. (Example) 9601 was entered as the serial communication speed by mistake. Enter an appropriate value again.
113	Value too small	The entered value is smaller than the setting range.
114	Value too large	The entered value is larger than the setting range. Refer to the actuator specifications or parameter table and enter an appropriate value again.
115	Home return non-completion	The current position was written when home return was not yet completed. Execute home return again.
116	Last position data available	Data was already set in the fields for the last position when an attempt was made to add data to the position table. Clear or delete the data for the last position before adding data.
117	No movement data	Target position is not set under the selected position number. Enter the target position first.
11E	Paired data mismatch	The values indicating the magnitude relationship of a pair of data are inappropriate. (Example) The same value was entered in both the parameters for + and – soft limits. Enter appropriate values again.
11F	Absolute position too small	The minimum movement toward the target position is determined by the lead length of the drive system and resolution of the encoder. This message indicates that the entered target value is smaller than the minimum movement. (Example) If the lead length is 16 mm, the encoder's resolution is 800 pulses and accordingly the minimum movement becomes 16 ÷ 800 = 0.02 mm/pulse. In this case, this message will be displayed if 0.01 mm is entered as the target position.
121	Push & hold search end over	The final position in push & hold operation exceeds the soft limit. This has no negative effect if the actuator contacts the work part. If the actuator misses the work part, however, the soft limit will be reached and thus this message is displayed as a warning. Change either the target position or positioning band.
122	Multiple axes connected at assignment	Address was assigned when multiple axes were connected. Assign each address only when one axis is connected.
180 181 182 183	Address change OK Controller initialization OK Home change all clear I/O function changed	These messages are displayed to confirm operation. (They don't indicate an operation error or other abnormality.)
202	Emergency stop	An emergency stop status was detected. (This is not an error.)

Code	Error name	Cause/Action
20C	CSTR-ON during operation	This message indicates that the start signal (CSTR) was turned ON by the PLC while the actuator was moving, and that duplicate movement commands occurred as a result.
20D	STP-OFF during operation	This message indicates that the pause signal was output by the PLC while the actuator was moving, and that the movement was disabled as a result.
20E	Soft limit over	This message indicates that a soft limit was reached.
210	HOME-ON during operation	This message indicates that the home return signal (HOME) was turned ON by the PLC while the actuator was moving, and that duplicate movement commands occurred as a result.
221	Write prohibited in monitor mode	This message indicates that an attempt was made to write data to a position table or parameter in the monitor mode.
223	Operation prohibited in monitor mode	This message indicates that an attempt was made to move the actuator in the monitor mode.
301 302 304 305 306 308 30A 30B	Overrun error (M) Flaming error (M) SCIR-QUE OV (M) SCIS-QUE OV (M) R-BF OV Response timeout (M) Packet R-QUE OV Packet S-QUE OV	These messages indicate an error in the serial communication with the controller. Cause: [1] Garbage data due to the effect of noise [2] Duplicate slave numbers when multiple controllers are controlled by serial communication Action: [1] Adjust the wiring in a manner eliminating the effect of noise and review the installation of equipment, etc. [2] Change the slave numbers to avoid duplication. If the message is still displayed after taking the above actions, please contact IAI.
307	Memory command refused	This message indicates that the command was refused in the serial communication with the controller.
309	Write address error	This message indicates that an indeterminate WRITE address error occurred in the serial communication with the controller.
		These conditions do not occur in normal operation. Should they occur, record the entire error list before cutting off the power for use in the cause investigation. Also contact IAI.
30C	No connected axis	This message indicates that no controller address is recognized. Cause: [1] The controller is not operating properly. [2] Only the supplied communication cable (SGA/SGB) is disconnected. [3] If a SIO converter is used, 24 V is supplied to the converter but the link cable is not connected. [4] Duplicate slave numbers in a configuration where multiple controllers are linked. Action: [1] Check if the RDY LED on the controller is lit. If this LED is unlit, the controller is faulty. [2] If a spare teaching pendant is available, replace the current pendant with the spare unit, or with a PC, and see if the message disappears. [3] Connect the link cable between the converter and controller first, and then supply the power. [4] Eliminate duplication among slave numbers. If the message is still displayed after taking the above actions, please contact IAI.

7.5 Specific Problems

- The LED lamp does not illuminate after the power is input.
  Cause: [1] Reverse connection of the 24-V power supply
  [2] Faulty controller board
  If the power supply is connected properly, probably the controller board is faulty. Please contact IAI.
  (Note) If the 24-V power supply is connected in reverse, the controller may not fail immediately but its service life will likely be shortened.

- The LED illuminates in red when the power is turned on.
  (An alarm is present or the motor drive power is cut off.)
  Check on the I/O monitor screen of the PC or teaching pendant if the alarm signal (*ALM) is output.
  If the alarm signal is output, check the description of the error and remove the cause.
  If alarm code 41 (motor voltage drop) is displayed, it means the motor drive power is cut off. Check the following items:
  [1] Is the emergency-stop switch on the operation panel pressed? Also confirm that the necessary interlocks are released.
  [2] Is the emergency-stop switch on the teaching pendant pressed?
  [3] If a SIO converter is used, is the PORT switch turned ON when a teaching pendant is not connected?

- Home return ends in the middle in a vertical application.
  Cause: [1] The loading mass exceeds the rating.
  [2] The ball screw is receiving torsional stress due to the affixing method of the actuator, tightening of bolts only on one side, etc.
  [3] The slide resistance of the actuator itself is large.
  Action: [1] Increase the value set in user parameter No. 13 (Current-limiting value during home return).
  Increasing this value will cause the home return torque to increase, so do not increase the parameter setting above 75%.
  [2] Loosen the fixing bolts and check if the slider moves smoothly.
  If the slider moves smoothly, review the affixing method and bolt tightening condition.
  [3] If the slide resistance of the actuator itself is large, please contact IAI.

- Noise occurs during downward movements in a vertical application.
  Cause: The loading mass exceeds the rating.
  Action: [1] Decrease the speed.
  [2] Decrease the value set in the user parameter No. 7 (Servo gain number). Do not decrease the parameter setting below “3.”

- Vibration occurs when the actuator is stopped.
  Cause: The slider is receiving an external force.
  Action: If the external force cannot be removed, increase the value set in user parameter No. 12 (Current-limiting value at standstill during positioning).
  Increasing this value will cause the holding torque at standstill to increase, so do not increase the parameter setting above 70%.

- The actuator overshoots when decelerated to a stop.
  Cause: The load inertia is high in view of the balance of loading mass and deceleration.
  Action: Decrease the deceleration setting.

- The home and target positions sometimes shift on the rod-type actuator.
  Cause: The current-limiting value is lower than what is required in view of the loading mass and slide resistance.
  Action: The actuator may have to be replaced in some cases. Please contact IAI.

- The speed is slow during push & hold operation.
  Cause: The set current-limiting value is insufficient for the loading mass or slide resistance.
  Action: Increase the current-limiting value for push & hold operation.

- The actuator moves only a half, or as much as twice, the specified travel.
  Cause: Pre-shipment setting error at IAI is suspected.
  Action: Contact IAI.

- The actuator operates abnormally when the servo is turned on following the power on.
  Cause: The excited phase is not detected correctly when the servo is turned on because of one of the following conditions at the time of power on:
  [1] The slider or rod is contacting the mechanical end.
  [2] An excessive external force is exerted to the load.
  Action: [1] Check if the slider or rod is contacting the mechanical end. If it is, move the slider/rod away from the mechanical end. If the actuator is equipped with a brake, move the slider/rod after releasing the brake by turning on the brake release switch. At this time, pay attention to prevent the load from falling due to its dead weight and protect your hand, robot, and the work part from injuries/damages.
  If the actuator cannot be moved by hand, you can check the direction of excited-phase signal detection and change the direction, if necessary. If you wish to attempt this course of action, please contact IAI.
  For details, refer to 6.2.2, “Parameters Relating to the Actuator Operating Characteristics.”
  [2] Check if the load is in contact with an object in the surroundings. If so, move the load away from the obstruction to provide a minimum clearance of 1 mm.
  If neither of causes [1] and [2] is present, please contact IAI.

- The LED (green) blinks.
  The automatic servo-off mode is currently active (this mode is not available on this controller). (This is not an error or failure.)

8. Maintenance and Inspection

8.1 Inspection Items and Schedule

Perform maintenance and inspection per the schedule specified below.
This schedule assumes eight hours of operation a day. Shorten the inspection intervals if the utilization is higher, such as when the actuator is operated continuously day and night.

	Visual inspection of appearance	Greasing	Model	
Start-up inspection	○			
After 1 month of operation	○			
After 3 months of operation	○	○ (Rod slide surface)	Rod type	*1
Every 3 months thereafter	○	○ (Rod slide surface)	Rod type	*1
After 3 years of operation or 5,000 km of moving distance	○	○ (Guide/ball screw)	Slider type	*2
Every 1 year thereafter	○	○ (Guide/ball screw)	Slider type	*2

*1 With a rod-type actuator, grease the rod slide surface if the surface is found dry at the start-up inspection or every three months.
First, wipe off the old grease and then supply new grease.
Sometimes grease is separated from the base oil due to the installing posture or operating conditions and the base oil leaks from the inside of actuator to the outside. Check visually whether the oil drips or not when supplying grease.

*2 With a slider-type actuator, grease the guide and ball screw as necessary by considering the use environment, condition, etc.

8.2 Visual Inspection of Appearance

Check the following items in the visual inspection:

Actuator	Loose actuator-mounting bolts, etc.
Rod sliding surface	Grease lubrication Dripping of grease base oil, etc. Dust or foreign objects on sliding surface
Cables	Damage, connector coupling
Overall	Noise, vibration

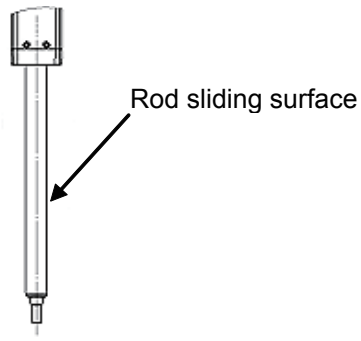

8.3 Cleaning

- Clean the exterior as necessary.
- If the grease base oil or others drip on the rod sliding surface and its periphery, wipe it off with a soft cloth, etc.
- Wipe off dirt using a soft cloth, etc.
- Do not blow compressed air at high speed. Doing so may cause dust to enter the actuator through gaps.
- Do not use petroleum solvent, since it will damage the resin and coated surfaces.
- To remove significant soiling, wipe the area gently using a soft cloth, etc., moistened with neutral detergent.

8.4 Internal Check (Slider Type)

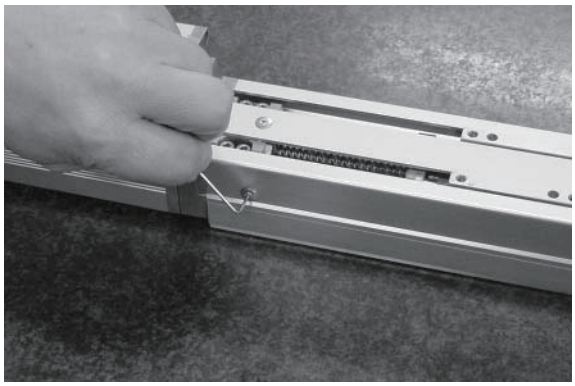

[1] With the SA6 and SA7, the screw cover and side covers can be removed using a hex wrench with 1.5 mm width across flats.

- The front and rear brackets are supporting the ball screw, so do not disassemble these brackets.
- Precision instrument is assembled into the motor cover, so do not disassemble the motor cover.

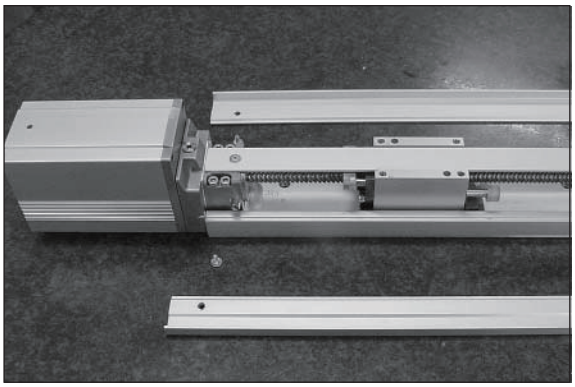

[2] Visually check the internal condition. Check for intrusion of dust and other foreign object, and also check the lubrication condition. Even when the grease is brown, the sliding surface is lubricated properly if the surface looks wet and glowing.

> ⚠ Warning: The encoder phase is adjusted precisely to enable detection of rotation angle and home signal. Never touch the encoder, since it may cause a breakdown.

[3] If the grease is contaminated with dust and not glowing, or if the grease has been consumed over a long period of use, apply grease after cleaning the respective parts.

[4] When the inspection/maintenance is complete, install the side covers, stainless sheet and slider cover by reversing the procedure in step [1] above. The tightening torque should be around the level applicable for Phillips recessed screws.

8.5 Internal Cleaning (Slider Type)

- Wipe off dirt using a soft cloth, etc.
- Do not blow compressed air at high speed. Doing so may cause dust to enter the actuator through gaps.
- Do not use petroleum solvent, neutral detergent or alcohol.

> ⚠ Caution: Do not use cleaning oil, molybdenum grease or rustproof lubricant.
> If a large amount of foreign object is contained in the grease, wipe off the dirty grease before applying new grease.

8.6 Greasing the Guide (Slider Type)

(1) Applicable grease

IAI uses lithium grease No. 2.
The following grease is applied to the guides prior to shipment:

Idemitsu Kosan	Daphne Grease MP No. 2

Equivalent grease products are available from other companies. For details, contact each manufacturer and ask for a product equivalent to the aforementioned brand. Equivalence of the following products has been confirmed:

Showa Shell Sekiyu	Albania Grease S2
ExxonMobil	UNIREX N2

(2) Greasing method

Grease the guide by following the procedure below:

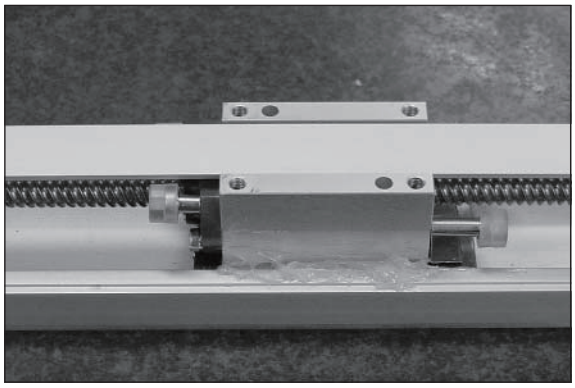

[1] Apply grease between the slider and base, as shown to the left.
Apply grease on the opposite side in the same manner.

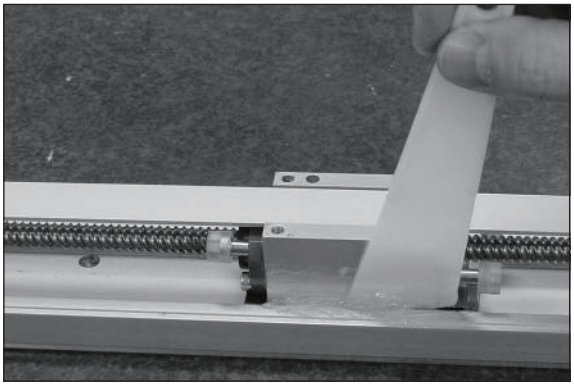

[2] Spread the grease evenly between the slider and base using a spatula, as shown to the left.
Spread the grease evenly on the opposite side in the same manner.

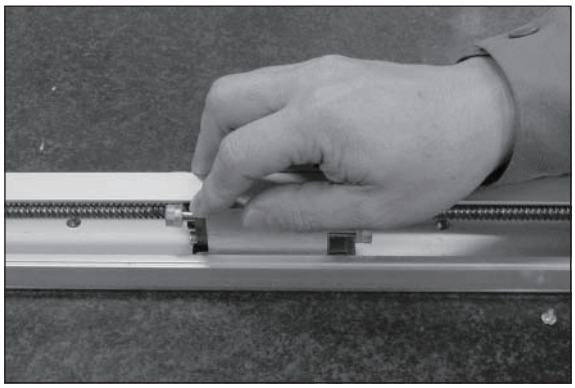

[3] Move the slider back and forth several times by hand.

[4] Repeat steps [1], [2] and [3].

[5] Use a waste cloth, etc., to wipe off excess grease from the slider.

⚠ Caution: In case the grease got into your eye, immediately go to see the doctor to get an appropriate care.
After finishing the grease supply work, wash your hands carefully with water and soap to rinse the grease OFF.

8.7 Greasing the Ball Screw (Slider Type)

(1) Applicable grease

The following special grease is applied to the ball screw prior to shipment:

Kyodo Yushi	Multemp LRL3

This grease generates less heat and has other excellent properties suitable for ball screws. For equivalent grease products, refer to the brands specified for the guide (lithium grease).

Note: Never use fluorine grease. If fluorine grease is mixed with lithium grease, the grease function will drop and it causes damage to the mechanism.

(2) Greasing method

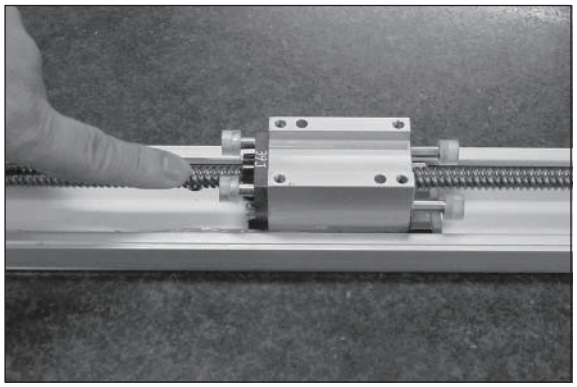

After cleaning the ball screw, apply grease and stroke the slider to let the grease spread evenly. As the final step, wipe off excess grease from the ball screw.
This is because excessive grease will cause the agitation resistance to increase and allow the ball screw to generate heat easily. Wiping off excess grease will also prevent extra grease on the ball screw from flying off and staining the surrounding area as the screw turns.

* With the ERC2, the speed will vary depending on the load. Be careful not to grease the ball screw excessively.

Caution: In case the grease got into your eye, immediately go to see the doctor to get an appropriate care. After finishing the grease supply work, wash your hands carefully with water and soap to rinse the grease OFF.

8.8 Greasing the Rod Slide Surface

(1) Applicable grease

The following grease is applied to the rod slide surface prior to shipment:

Kyodo Yushi	Multemp LRL3

Wipe off the old grease, and then supply new grease.
Use lithium grease for maintenance.

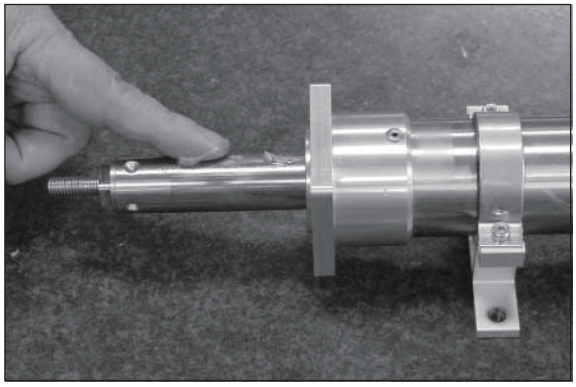

Note: Never use fluorine grease. If fluorine grease is mixed with lithium grease, the grease function will drop and it causes damage to the mechanism.

Caution: In case the grease got into your eye, immediately go to see the doctor to get an appropriate care. After finishing the grease supply work, wash your hands carefully with water and soap to rinse the grease OFF.

8.9 Motor Replacement Procedure

Before replacing the motor, save the latest parameter and position data.
Save the data by one of the following methods:

- Save the data to a file using the PC software.
- Prepare position/parameter tables and manually write the values.

When a new motor has been installed, enter the parameter/position data to the controller.

Follow the procedure below to replace the motor unit or coupling spacer:

- Removal

[1] Remove the coupling bolt from the rear bracket using a wrench with 3 mm width across flats.
[2] Hold the motor cover and pull backward to remove the motor unit. (Exercise caution to prevent pinching of parts.)

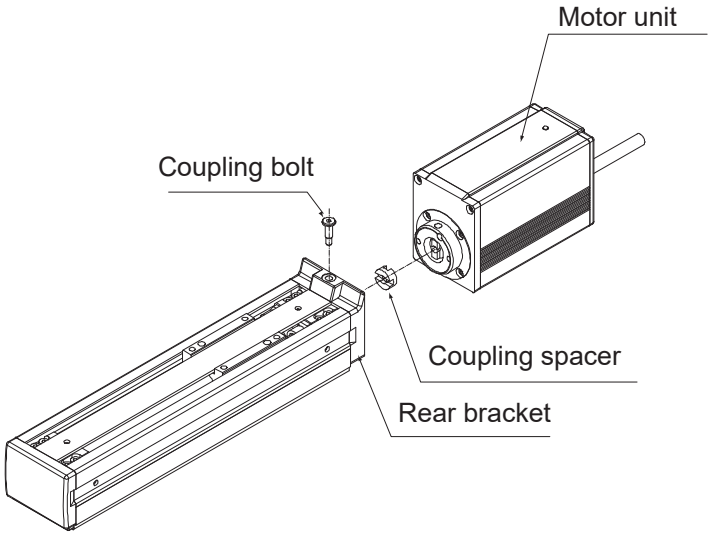

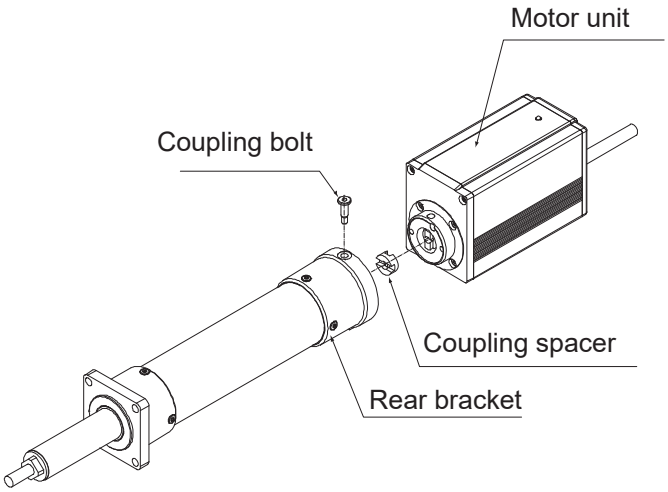

- Installation

[1] Place the coupling spacer in the coupling hub.
[2] Insert the motor unit into the rear bracket while paying attention to the phase of the coupling hub with respect to the coupling spacer. (When inserting the motor unit, exercise due caution to prevent pinching of parts.)
[3] Insert the coupling bolt into the fitting hole in the motor unit from over the rear bracket, and tighten the bolt using a wrench with 3 mm width across flats.

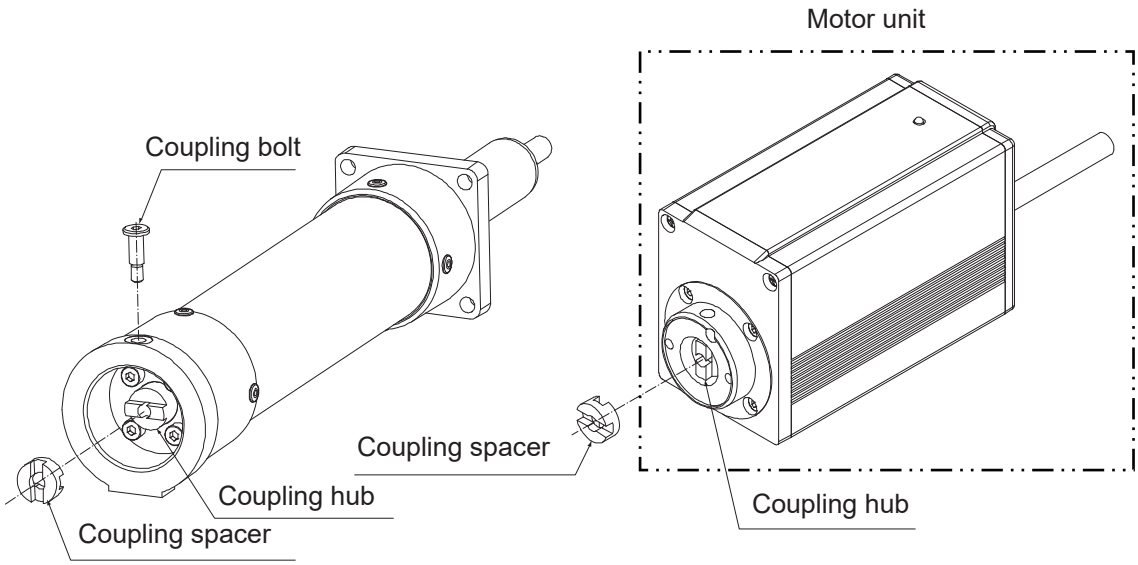

9. Operation Examples

Refer to the operation manuals specified below for operation examples using this product:

- Operation Manual for DeviceNet Gateway Unit
- Operation Manual for CC-Link Gateway Unit
- Operation Manual for Serial Communication Protocol

10. Appendix

10.1 External Dimensions

10.1.1 ERC2-SA6C

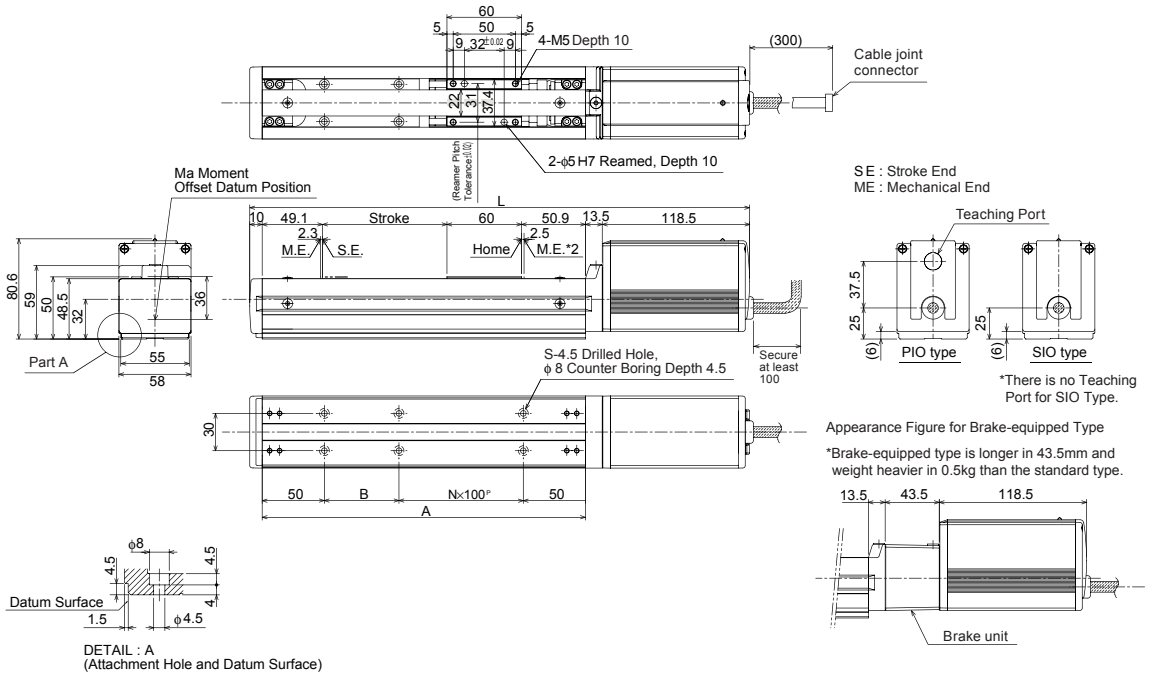

Stroke	50	100	150	200	250	300	350	400	450	500	550	600
L	352	402	452	502	552	602	652	702	752	802	852	902
A	210	260	310	360	410	460	510	560	610	660	710	760
B	10	60	10	60	10	60	10	60	10	60	10	60
N	1	1	2	2	3	3	4	4	5	5	6	6
S	6	6	8	8	10	10	12	12	14	14	16	16
Weight [kg]	1.9	2.0	2.1	2.3	2.4	2.6	2.7	2.8	3.0	3.1	3.3	3.4

10.1.2 ERC2-SA7C

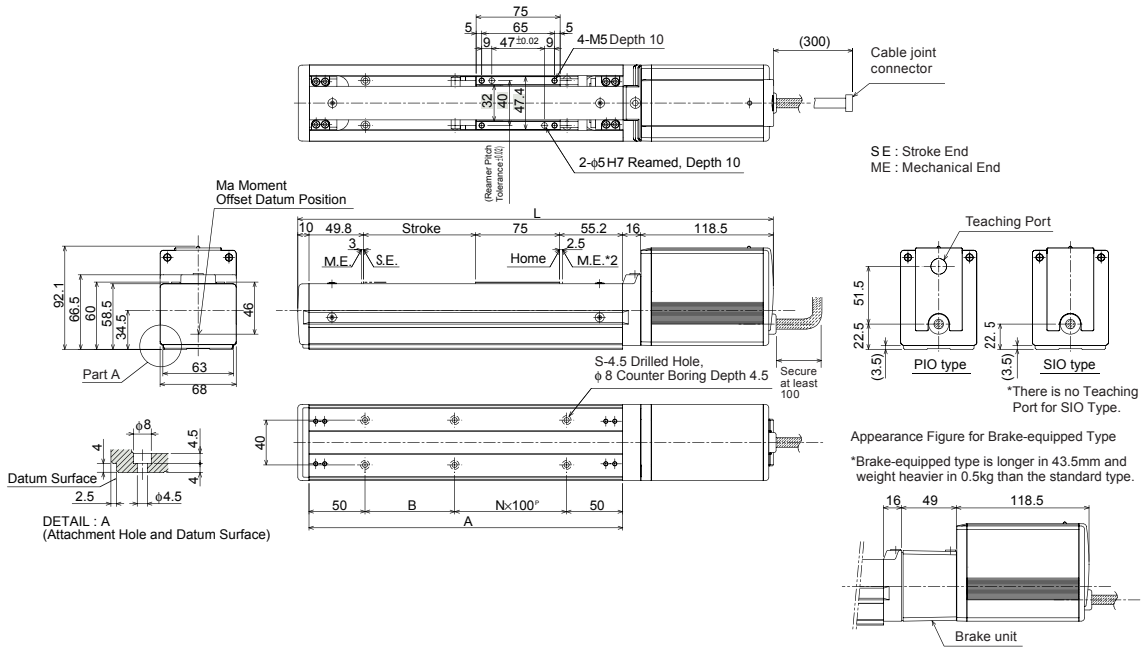

Stroke	50	100	150	200	250	300	350	400	450	500	550	600
L	374.5	424.5	474.5	524.5	574.5	624.5	674.5	724.5	774.5	824.5	874.5	924.5
A	230	280	330	380	430	480	530	580	630	680	730	780
B	30	80	30	80	30	80	30	80	30	80	30	80
N	1	1	2	2	3	3	4	4	5	5	6	6
S	6	6	8	8	10	10	12	12	14	14	16	16
Weight [kg]	3.1	3.2	3.4	3.6	3.7	3.9	4.0	4.2	4.3	4.5	4.6	4.8

10.1.3 ERC2-RA6C

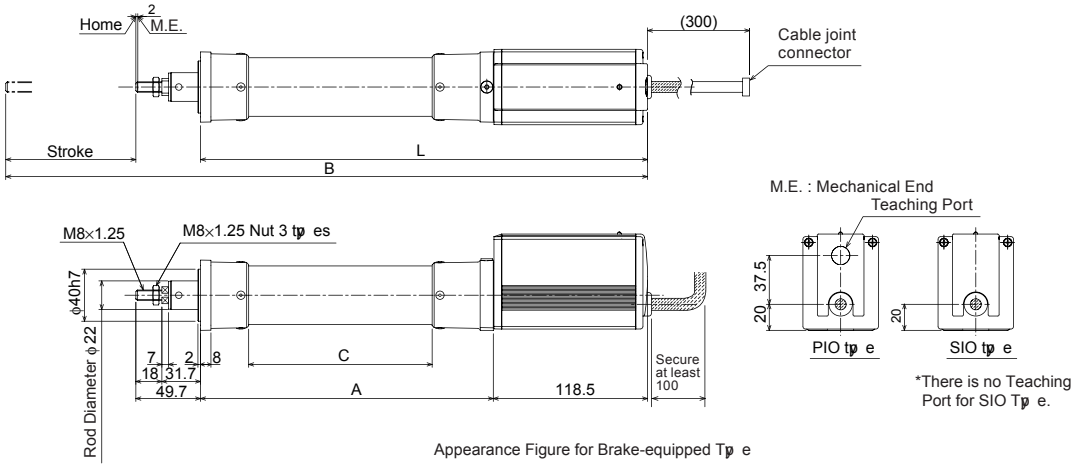

Appearance Figure for Brake-equipped Type

*Brake-equipped type is longer in 43.5mm and weight heavier in 0.5kg than the standard type.

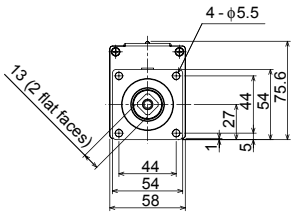

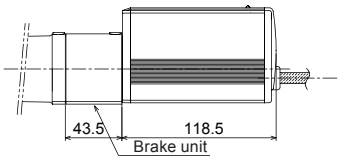

(note) The angle of the 2 faces on the actual product would not be as shown in the drawing.

Stroke	50	100	150	200	250	300
L	293.5	343.5	393.5	443.5	493.5	543.5
A	175	225	275	325	375	425
B	393.2	493.2	593.2	693.2	793.2	893.2
C	91	141	191	241	291	341
Weight [kg]	1.6	1.7	1.8	2.0	2.1	2.2

10.1.4 ERC2-RA7C

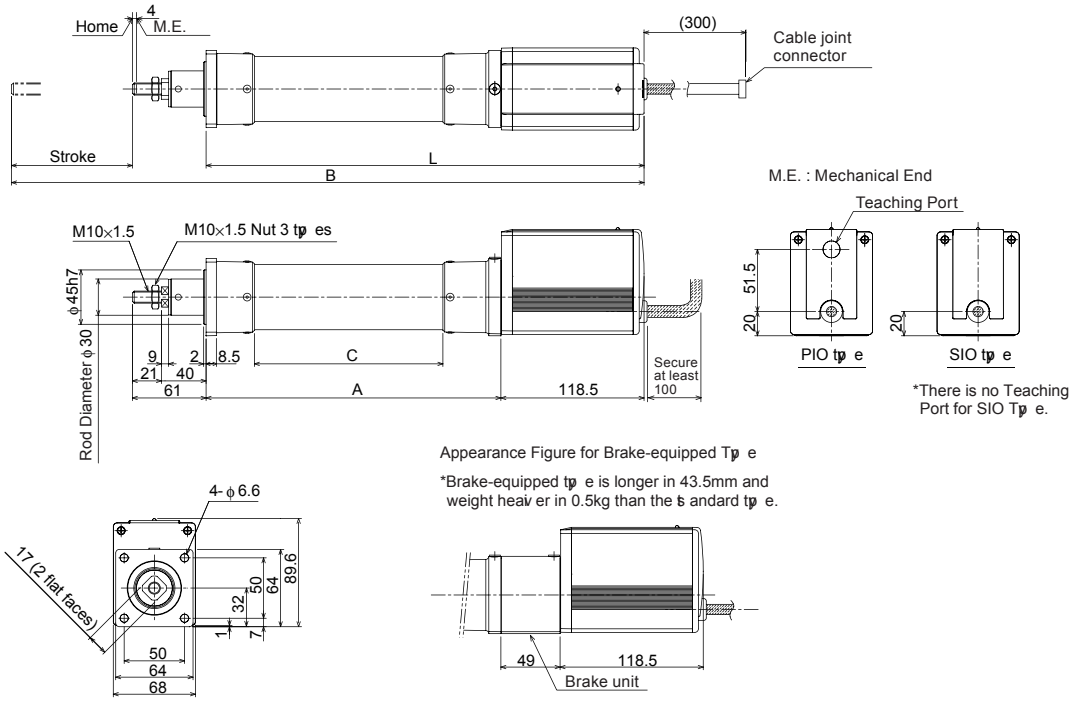

(note) The angle of the 2 faces on the actual product would not be as shown in the drawing.

Stroke	50	100	150	200	250	300
L	312.5	362.5	412.5	462.5	512.5	562.5
A	194	244	294	344	394	444
B	423.5	523.5	623.5	723.5	823.5	923.5
C	106	156	206	256	306	356
Weight [kg]	2.7	2.9	3.0	3.2	3.3	3.5

10.1.5 ERC2-RGS6C

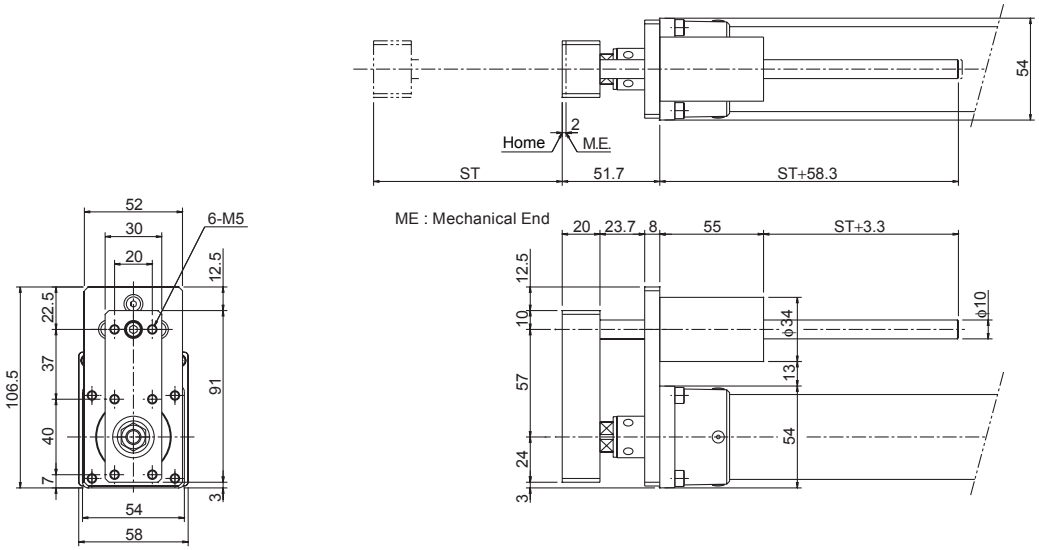

Stroke	50	100	150	200	250	300
Guide Weight [kg]	0.2	0.2	0.3	0.3	0.3	0.4
Weight of Guide + Main Unit [kg]	1.8	1.9	2.1	2.3	2.4	2.6

10.1.6 ERC2-RGS7C

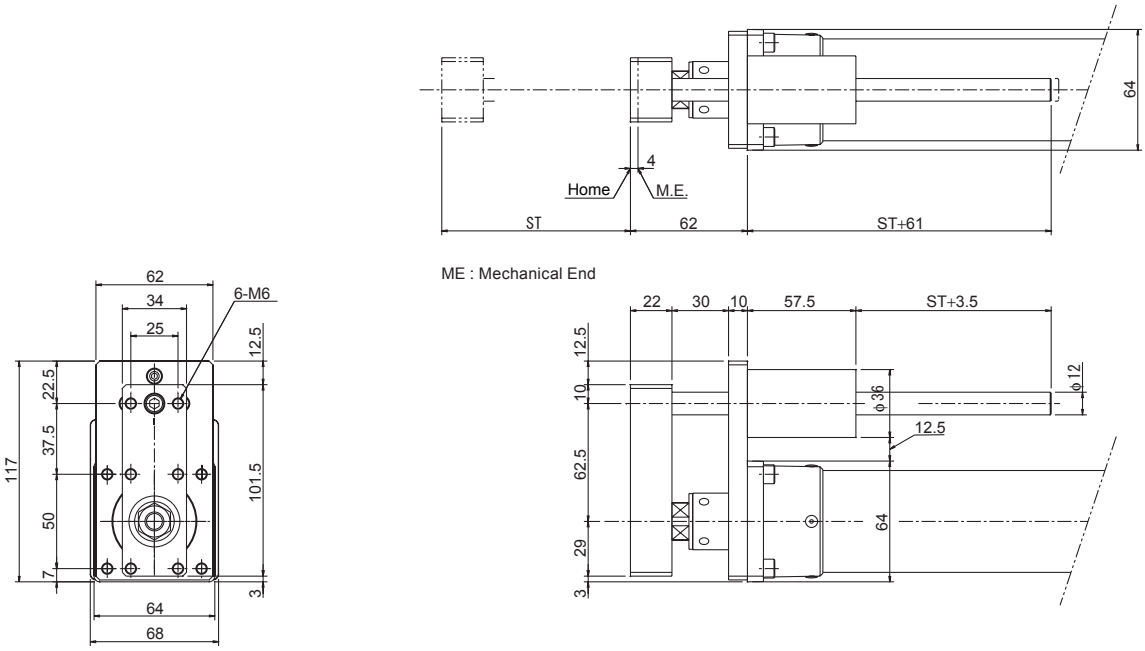

Stroke	50	100	150	200	250	300
Guide Weight [kg]	0.3	0.3	0.4	0.4	0.5	0.5
Weight of Guide + Main Unit [kg]	3.0	3.2	3.4	3.6	3.8	4.0

10.1.7 ERC2-RGD6C

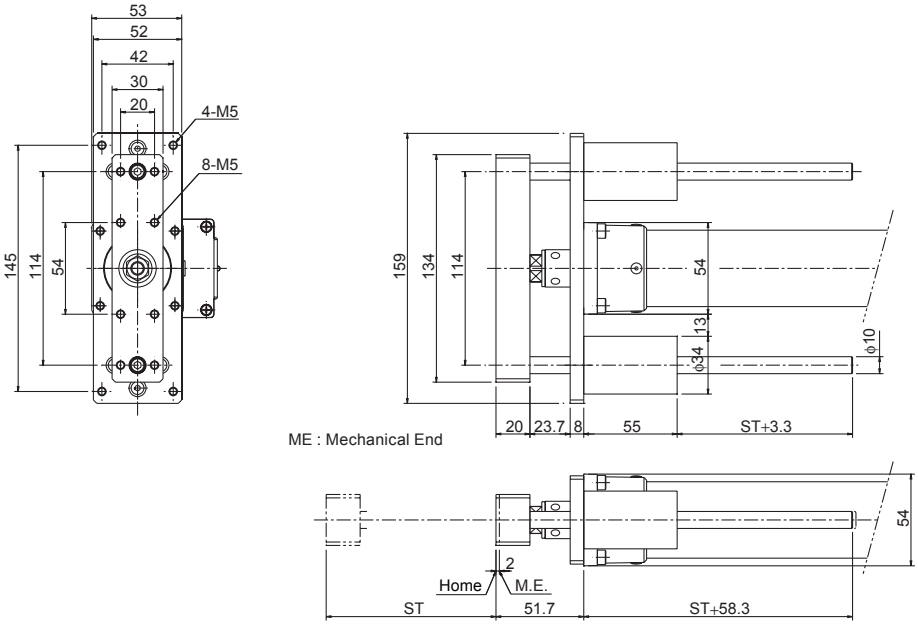

Stroke	50	100	150	200	250	300
Guide Weight [kg]	0.4	0.4	0.5	0.6	0.6	0.7
Weight of Guide + Main Unit [kg]	2.0	2.1	2.3	2.6	2.7	2.9

10.1.8 ERC2-RGD7C

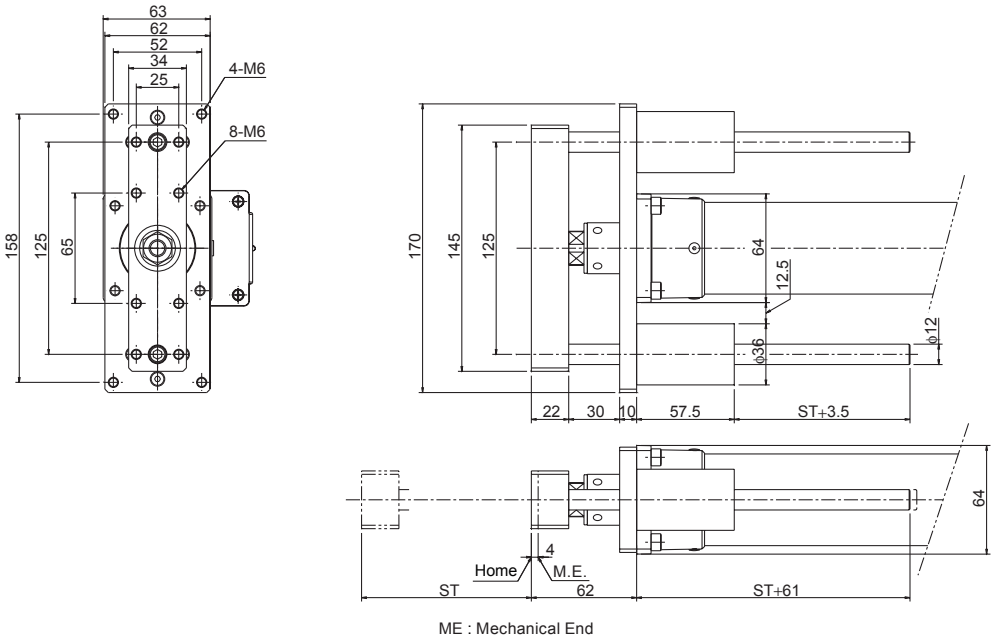

Stroke	50	100	150	200	250	300
Guide Weight [kg]	0.5	0.6	0.7	0.8	0.9	1.0
Weight of Guide + Main Unit [kg]	3.2	3.5	3.7	4.0	4.2	4.5

10.2 Recording of Position Table

Recorded date: _____

No.	Position [mm]	Speed [mm/s]	Acceleration [G]	Deceleration [G]	Push [%]	Threshold [%]	Positioning band [mm]	Zone+ [mm]	Zone– [mm]	Acceleration/ deceleration mode	Incremental	Command mode	Standstill mode
0													
1													
2													
3													
4													
5													
6													
7													
8													
9													
10													
11													
12													
13													
14													
15													
16													
17													
18													

Recorded date: _____

No.	Position [mm]	Speed [mm/s]	Acceleration [G]	Deceleration [G]	Push [%]	Threshold [%]	Positioning band [mm]	Zone+ [mm]	Zone– [mm]	Acceleration/ deceleration mode	Incremental	Command mode	Standstill mode
19													
20													
21													
22													
23													
24													
25													
26													
27													
28													
29													
30													
31													
32													
33													
34													
35													
36													
37													
38													
39													
40													
41													

Recorded date: _____

No.	Position [mm]	Speed [mm/s]	Acceleration [G]	Deceleration [G]	Push [%]	Threshold [%]	Positioning band [mm]	Zone+ [mm]	Zone– [mm]	Acceleration/ deceleration mode	Incremental	Command mode	Standstill mode
42													
43													
44													
45													
46													
47													
48													
49													
50													
51													
52													
53													
54													
55													
56													
57													
58													
59													
60													
61													
62													
63													

10.3 Parameter Records

Recorded date: _____

Category: a: Parameter relating to the actuator stroke range
b: Parameter relating to the actuator operating characteristics
c: Parameter relating to the external interface
d: Servo gain adjustment

No.	Category	Symbol	Name	Unit	Recorded data
1	a	ZONM	Zone boundary 1+	mm	
2	a	ZONL	Zone boundary 1–	mm	
3	a	LIMM	Soft limit+	mm	
4	a	LIML	Soft limit–	mm	
5	a	ORG	Home return direction (0: Reverse/1: Forward)	-	
6	b	PSWT	Push & hold stop judgment period	msec	
7	d	PLG0	Servo gain number	-	
8	b	VCMD	Default speed	mm/sec	
9	b	ACMD	Default acceleration/deceleration	G	
10	b	INP	Default positioning band (in-position)	mm	
12	b	SPOW	Current-limiting value at standstill during positioning	%	
13	b	ODPW	Current-limiting value during home return	%	
16	c	BRSL	SIO communication speed	bps	
17	c	RTIM	Minimum delay time for slave transmitter activation	msec	
22	a	OFST	Home return offset	mm	
23	a	ZNM2	Zone boundary 2+	mm	
24	a	ZNL2	Zone boundary 2–	mm	
28	b	PHSP1	Default direction of excited-phase signal detection (0: Reverse/1: Forward)	-	
29	b	PHSP2	Excited-phase signal detection time	msec	
31	d	VLPG	Speed loop proportional gain	-	
32	d	VLPT	Speed loop integral gain	-	
33	d	TRQF	Torque filter time constant	-	
34	b	PSHV	Push speed	mm/sec	
35	b	SAFV	Safety speed	mm/sec	
39	c	FPIO	Output mode of position complete signal (0: PEND/1: INP)	-	
45	c	SIVM	Silent interval multiplication factor	times	
46	b	OVRD	Speed override	%	
53	b	CTLF	Default standstill mode	-	

Change History

Revision Date	Description of Revision
January 2011	Fifth edition ・Added “Before Use.” ・Changed “Safety Precautions” to “Safety Guide.” ・P. 9: Added 1.5.3, “The sound pressure level of this product does not exceed 70 dB.” ・P. 16: Moved “Prohibitions/Notes on Handling Cables” to after 1.9, “Wiring.” ・P. 85: Changed the description relating to the speed loop integral gain.
April 2011	Sixth edition ・A page for CE Marking added
March 2012	Seventh edition ・P. 1 to 7: Contents added and changed in Safety Guide ・P. 8: Caution in Handling added ・P. 18 to 19: Contents changed in 1.6 Warranty ・P. 109 to 111: Warning notes added such as in case the grease got into your eye, immediately go to see the doctor for an appropriate care. ・P. 115 to 120: Weight added to appearance drawing
June 2015	7C edition ・P. 26: Change made in caution note for connection to controller ・P. 108: Grease change due to production stop Albania Grease No.2 → Albania Grease S2 Mobilax 2 → UNIREX N2
April 2016	7D edition ・P. 106, 111: The contents about grease supply on rod sliding surface and cleaning are added
October 2016	7E edition ・Caution in Handling Note added stating “Do not attempt to apply any force except for the radial load to actuators equipped with the single guide.”
February 2017	7F edition ・P. 9: Figures added showing directions unacceptable to receive load on single guide
October 2019	7G edition ・P. 86: “Caution: The home cannot be set on the opposite side for rod-type actuators.” deleted ・P. 109: Grease changed from Daphne Eponex Grease No. 2 to Daphne Grease MP No. 2
June 2026	7H edition ・Changes due to discontinuation of including the Instruction Manual DVD ・Terms integrated (cable carrier)

Manual No.:ME0159-7H (June 2026)

Quality and Innovation

IAI Corporation

Head Office: 1210 Ihara Shimizu-KU Shizuoka City Shizuoka 424-0114, Japan
TEL +81-54-364-5105 FAX +81-54-364-2589
website: www.iai-robot.co.jp/

IAI America, Inc.

Head Office: 2690 W. 237th Street, Torrance, CA 90505
TEL +1-310-891-6015 FAX +1-310-891-0815
Chicago Office: 110 East State Parkway, Schaumburg, IL 60173
TEL +1-847- 908-1400 FAX +1-847-908-1399
Atlanta Office: 1220 Kennestone Circle, Suite 108, Marietta, GA 30066
TEL +1-678-354-9470 FAX +1-678-354-9471
website: www.intelligentactuator.com

Technical Support available in Europe

IAI Industrieroboter GmbH

Ober der Röth 4, D-65824 Schwalbach am Taunus, Germany
TEL +49(0)6196-88950 FAX +49(0)6196-889524
website: www.iai-automation.com

Technical Support available in Great Britain

LC Automation
control & safety

Duttons Way, Shadsworth Business Park, Blackburn, Lancashire, BB1 2QR, United Kingdom
TEL +44(0) 1254-685900
website: www.lcautomation.com

IAI (Shanghai) Co., Ltd.

SHANGHAI JIAHUA BUSINESS CENTER A8-303, 808, Hongqiao Rd. Shang hai 200030, China
TEL +86-21-6448-4753 FAX +86-21-6448-3992
website: www.iai-robot.com

IAI Robot (Thailand) Co., Ltd.

825 PhairojKijja Tower 7th Floor, Debaratana RD., Bangna Nuea, Bangna, Bangkok 10260, Thailand
TEL +66-2-361-4458 FAX +66-2-361-4456
website: www.iai-robot.co.th

The information contained in this document is subject to change without notice for purposes of product improvement.
Copyright © 2026.Jun. IAI Corporation.All rights reserved.

26.06.000