INTELLIGENT ACTUATOR

IX

INTELLIGENT ACTUATOR

Horizontal Articulated Robot – IX Series

Ceiling-mount Type, Arm Length 500/600/700/800

IX-HNN50□□/60□□/70□□/80□□
IX-INN50□□/60□□/70□□/80□□

Operation Manual Fifth Edition

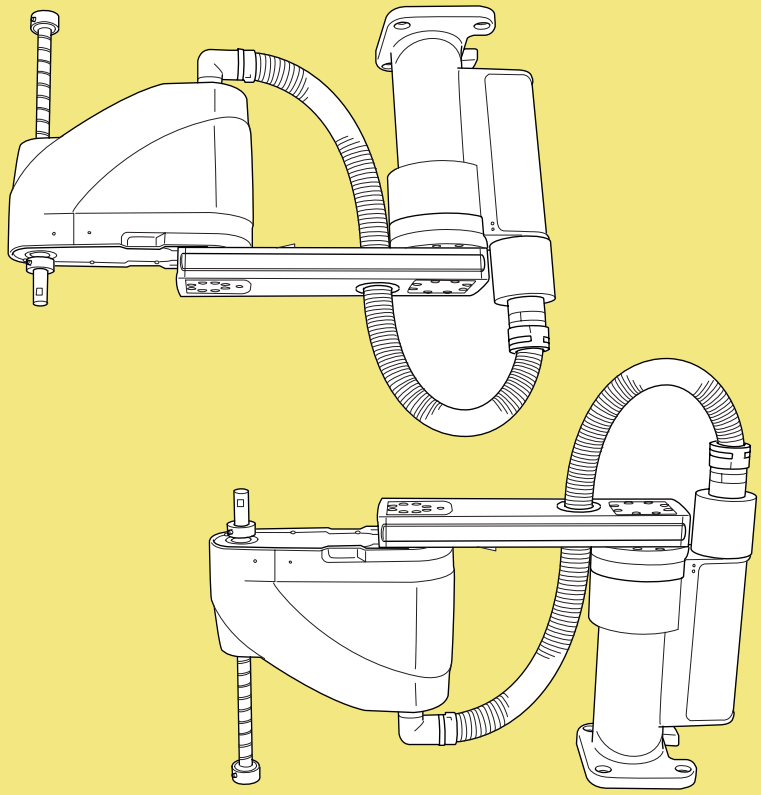

IAI Corporation

Please Read Before Use

Thank you for purchasing an IAI product.

This operation manual explains the handling methods, structure and maintenance of this product, among others, providing the information you need to know to use the product safely.

Before using the product, be sure to read this manual and fully understand the contents explained herein to ensure safe use of the product.
The DVD that comes with the product contains operation manuals for IAI products.
When using the product, refer to the necessary portions of the applicable operation manual by printing them out or displaying them on a PC.

After reading the operation manual, keep it in a convenient place so that whoever is handling this product can reference it quickly when necessary.

[Important]

- The product cannot be operated in any way unless expressly specified in this operation manual. IAI shall assume no responsibility for the outcome of any operation not specified herein.
- Information contained in this operation manual is subject to change without notice for the purpose of product improvement.
- This operation manual is original.
- If you have any question or comment regarding the content of this manual, please contact the IAI sales office near you.
- Unauthorized use or reproduction of this operation manual, whether in whole or in part, is strictly prohibited.

CE Marking

If a compliance with the CE Marking is required, please follow Overseas Standards Compliance Manual (ME0287) that is provided separately.

Table of Contents

Safety Guide 1
Caution in Handling 8
1. Names of Robot Parts 9
1.1 Ceiling-mount Specification 9
1.2 Labels 10
1.3 Label Positions 11
2. Transportation and Handling 12
2.1 Handling of the Carton 12
2.2 Packing Condition of the Robot 12
2.3 Handling of Individual Components 13
2.4 Checking after Unpacking 13
2.5 Transporting the Robot 14
3. Installation Environment and Storage Environment 16
3.1 Installation Environment 16
3.2 Installation Platform 16
3.3 Storage Environment 16
4. How to Install 17
4.1 Installation Posture 17
4.2 Notes on Installation 18
4.3 Installing the Robot 20
4.4 Connecting the Controller 21
4.5 Checking after Installation 23
5. Precautions for Use 24
5.1 Reference Acceleration/Deceleration Settings 24
5.2 Tools 26
5.3 Carrying Load 27
5.4 User Wiring and Piping 28
6. Inspection/Maintenance 30
6.1 Inspection/Maintenance 30
6.2 How to Check/Adjust Belt Tension 32
6.3 Battery Replacement 39
6.4 Absolute Reset Procedure 42
7. Specifications 59
7.1 Horizontal Articulated Robot Specifications 59
7.2 External Dimensions 75
7.3 Robot Operation Area 79
7.4 Wiring Diagram 81
7.5 230V Circuit Components 82

8. Warranty 83
8.1 Warranty Period 83
8.2 Scope of Warranty 83
8.3 Honoring the Warranty 83
8.4 Limited Liability 83
8.5 Conditions of Conformance with Applicable Standards/Regulations, Etc., and Applications 84
8.6 Other Items Excluded from Warranty 84
9. EC Declaration of Conformity 85
Change History 90

Safety Guide

"Safety Guide" has been written to use the machine safely and so prevent personal injury or property damage beforehand. Make sure to read it before the operation of this product.

Safety Precautions for Our Products

The common safety precautions for the use of any of our robots in each operation.

No.	Operation Description	Description
1	Model Selection	● This product has not been planned and designed for the application where high level of safety is required, so the guarantee of the protection of human life is impossible. Accordingly, do not use it in any of the following applications. 1) Medical equipment used to maintain, control or otherwise affect human life or physical health. 2) Mechanisms and machinery designed for the purpose of moving or transporting people (For vehicle, railway facility or air navigation facility) 3) Important safety parts of machinery (Safety device, etc.) ● Do not use the product outside the specifications. Failure to do so may considerably shorten the life of the product. ● Do not use it in any of the following environments. 1) Location where there is any inflammable gas, inflammable object or explosive 2) Place with potential exposure to radiation 3) Location with the ambient temperature or relative humidity exceeding the specification range 4) Location where radiant heat is added from direct sunlight or other large heat source 5) Location where condensation occurs due to abrupt temperature changes 6) Location where there is any corrosive gas (sulfuric acid or hydrochloric acid) 7) Location exposed to significant amount of dust, salt or iron powder 8) Location subject to direct vibration or impact ● For an actuator used in vertical orientation, select a model which is equipped with a brake. If selecting a model with no brake, the moving part may drop when the power is turned OFF and may cause an accident such as an injury or damage on the work piece.

No.	Operation Description	Description
2	Transportation	● When carrying a heavy object, do the work with two or more persons or utilize equipment such as crane. ● When the work is carried out with 2 or more persons, make it clear who is to be the leader and who to be the follower(s) and communicate well with each other to ensure the safety of the workers. ● When in transportation, consider well about the positions to hold, weight and weight balance and pay special attention to the carried object so it would not get hit or dropped. ● Transport it using an appropriate transportation measure. The actuators available for transportation with a crane have eyebolts attached or there are tapped holes to attach bolts. Follow the instructions in the instruction manual for each model. ● Do not step or sit on the package. ● Do not put any heavy thing that can deform the package, on it. ● When using a crane capable of 1t or more of weight, have an operator who has qualifications for crane operation and sling work. ● When using a crane or equivalent equipments, make sure not to hang a load that weighs more than the equipment's capability limit. ● Use a hook that is suitable for the load. Consider the safety factor of the hook in such factors as shear strength. ● Do not get on the load that is hung on a crane. ● Do not leave a load hung up with a crane. ● Do not stand under the load that is hung up with a crane.
3	Storage and Preservation	● The storage and preservation environment conforms to the installation environment. However, especially give consideration to the prevention of condensation. ● Store the products with a consideration not to fall them over or drop due to an act of God such as earthquake.
4	Installation and Start	(1) Installation of Robot Main Body and Controller, etc. ● Make sure to securely hold and fix the product (including the work part). A fall, drop or abnormal motion of the product may cause a damage or injury. Also, be equipped for a fall-over or drop due to an act of God such as earthquake. ● Do not get on or put anything on the product. Failure to do so may cause an accidental fall, injury or damage to the product due to a drop of anything, malfunction of the product, performance degradation, or shortening of its life. ● When using the product in any of the places specified below, provide a sufficient shield. 1) Location where electric noise is generated 2) Location where high electrical or magnetic field is present 3) Location with the mains or power lines passing nearby 4) Location where the product may come in contact with water, oil or chemical droplets

No.	Operation Description	Description
4	Installation and Start	(2) Cable Wiring ● Use our company's genuine cables for connecting between the actuator and controller, and for the teaching tool. ● Do not scratch on the cable. Do not bend it forcibly. Do not pull it. Do not coil it around. Do not insert it. Do not put any heavy thing on it. Failure to do so may cause a fire, electric shock or malfunction due to leakage or continuity error. ● Perform the wiring for the product, after turning OFF the power to the unit, so that there is no wiring error. ● When the direct current power (+24V) is connected, take the great care of the directions of positive and negative poles. If the connection direction is not correct, it might cause a fire, product breakdown or malfunction. ● Connect the cable connector securely so that there is no disconnection or looseness. Failure to do so may cause a fire, electric shock or malfunction of the product. ● Never cut and/or reconnect the cables supplied with the product for the purpose of extending or shortening the cable length. Failure to do so may cause the product to malfunction or cause fire.
		(3) Grounding ● The grounding operation should be performed to prevent an electric shock or electrostatic charge, enhance the noise-resistance ability and control the unnecessary electromagnetic radiation. ● For the ground terminal on the AC power cable of the controller and the grounding plate in the control panel, make sure to use a twisted pair cable with wire thickness 0.5mm^2 (AWG20 or equivalent) or more for grounding work. For security grounding, it is necessary to select an appropriate wire thickness suitable for the load. Perform wiring that satisfies the specifications (electrical equipment technical standards). ● Perform Class D Grounding (former Class 3 Grounding with ground resistance 100Ω or below).

No.	Operation Description	Description
4	Installation and Start	(4) Safety Measures ● When the work is carried out with 2 or more persons, make it clear who is to be the leader and who to be the follower(s) and communicate well with each other to ensure the safety of the workers. ● When the product is under operation or in the ready mode, take the safety measures (such as the installation of safety and protection fence) so that nobody can enter the area within the robot's movable range. When the robot under operation is touched, it may result in death or serious injury. ● Make sure to install the emergency stop circuit so that the unit can be stopped immediately in an emergency during the unit operation. ● Take the safety measure not to start up the unit only with the power turning ON. Failure to do so may start up the machine suddenly and cause an injury or damage to the product. ● Take the safety measure not to start up the machine only with the emergency stop cancellation or recovery after the power failure. Failure to do so may result in an electric shock or injury due to unexpected power input. ● When the installation or adjustment operation is to be performed, give clear warnings such as "Under Operation; Do not turn ON the power!" etc. Sudden power input may cause an electric shock or injury. ● Take the measure so that the work part is not dropped in power failure or emergency stop. ● Wear protection gloves, goggle or safety shoes, as necessary, to secure safety. ● Do not insert a finger or object in the openings in the product. Failure to do so may cause an injury, electric shock, damage to the product or fire. ● When releasing the brake on a vertically oriented actuator, exercise precaution not to pinch your hand or damage the work parts with the actuator dropped by gravity.
5	Teaching	● When the work is carried out with 2 or more persons, make it clear who is to be the leader and who to be the follower(s) and communicate well with each other to ensure the safety of the workers. ● Perform the teaching operation from outside the safety protection fence, if possible. In the case that the operation is to be performed unavoidably inside the safety protection fence, prepare the "Stipulations for the Operation" and make sure that all the workers acknowledge and understand them well. ● When the operation is to be performed inside the safety protection fence, the worker should have an emergency stop switch at hand with him so that the unit can be stopped any time in an emergency. ● When the operation is to be performed inside the safety protection fence, in addition to the workers, arrange a watchman so that the machine can be stopped any time in an emergency. Also, keep watch on the operation so that any third person can not operate the switches carelessly. ● Place a sign "Under Operation" at the position easy to see. ● When releasing the brake on a vertically oriented actuator, exercise precaution not to pinch your hand or damage the work parts with the actuator dropped by gravity. * Safety protection Fence : In the case that there is no safety protection fence, the movable range should be indicated.

No.	Operation Description	Description
6	Trial Operation	● When the work is carried out with 2 or more persons, make it clear who is to be the leader and who to be the follower(s) and communicate well with each other to ensure the safety of the workers. ● After the teaching or programming operation, perform the check operation one step by one step and then shift to the automatic operation. ● When the check operation is to be performed inside the safety protection fence, perform the check operation using the previously specified work procedure like the teaching operation. ● Make sure to perform the programmed operation check at the safety speed. Failure to do so may result in an accident due to unexpected motion caused by a program error, etc. ● Do not touch the terminal block or any of the various setting switches in the power ON mode. Failure to do so may result in an electric shock or malfunction.
7	Automatic Operation	● Check before starting the automatic operation or rebooting after operation stop that there is nobody in the safety protection fence. ● Before starting automatic operation, make sure that all peripheral equipment is in an automatic-operation-ready state and there is no alarm indication. ● Make sure to operate automatic operation start from outside of the safety protection fence. ● In the case that there is any abnormal heating, smoke, offensive smell, or abnormal noise in the product, immediately stop the machine and turn OFF the power switch. Failure to do so may result in a fire or damage to the product. ● When a power failure occurs, turn OFF the power switch. Failure to do so may cause an injury or damage to the product, due to a sudden motion of the product in the recovery operation from the power failure.

No.	Operation Description	Description
8	Maintenance and Inspection	● When the work is carried out with 2 or more persons, make it clear who is to be the leader and who to be the follower(s) and communicate well with each other to ensure the safety of the workers. ● Perform the work out of the safety protection fence, if possible. In the case that the operation is to be performed unavoidably inside the safety protection fence, prepare the “Stipulations for the Operation” and make sure that all the workers acknowledge and understand them well. ● When the work is to be performed inside the safety protection fence, basically turn OFF the power switch. ● When the operation is to be performed inside the safety protection fence, the worker should have an emergency stop switch at hand with him so that the unit can be stopped any time in an emergency. ● When the operation is to be performed inside the safety protection fence, in addition to the workers, arrange a watchman so that the machine can be stopped any time in an emergency. Also, keep watch on the operation so that any third person can not operate the switches carelessly. ● Place a sign “Under Operation” at the position easy to see. ● For the grease for the guide or ball screw, use appropriate grease according to the Instruction Manual for each model. ● Do not perform the dielectric strength test. Failure to do so may result in a damage to the product. ● When releasing the brake on a vertically oriented actuator, exercise precaution not to pinch your hand or damage the work parts with the actuator dropped by gravity. ● The slider or rod may get misaligned OFF the stop position if the servo is turned OFF. Be careful not to get injured or damaged due to an unnecessary operation. ● Pay attention not to lose the cover or untightened screws, and make sure to put the product back to the original condition after maintenance and inspection works. Use in incomplete condition may cause damage to the product or an injury. * Safety protection Fence : In the case that there is no safety protection fence, the movable range should be indicated.
9	Modification and Dismantle	● Do not modify, disassemble, assemble or use of maintenance parts not specified based at your own discretion.
10	Disposal	● When the product becomes no longer usable or necessary, dispose of it properly as an industrial waste. ● When removing the actuator for disposal, pay attention to drop of components when detaching screws. ● Do not put the product in a fire when disposing of it. The product may burst or generate toxic gases.
11	Other	● Do not come close to the product or the harnesses if you are a person who requires a support of medical devices such as a pacemaker. Doing so may affect the performance of your medical device. ● See Overseas Specifications Compliance Manual to check whether complies if necessary. ● For the handling of actuators and controllers, follow the dedicated instruction manual of each unit to ensure the safety.

Alert Indication

The safety precautions are divided into “Danger”, “Warning”, “Caution” and “Notice” according to the warning level, as follows, and described in the Instruction Manual for each model.

Level	Degree of Danger and Damage	Symbol
Danger	This indicates an imminently hazardous situation which, if the product is not handled correctly, will result in death or serious injury.	Danger
Warning	This indicates a potentially hazardous situation which, if the product is not handled correctly, could result in death or serious injury.	Warning
Caution	This indicates a potentially hazardous situation which, if the product is not handled correctly, may result in minor injury or property damage.	Caution
Notice	This indicates lower possibility for the injury, but should be kept to use this product properly.	Notice

Caution in Handling

1. Make sure to attach the vertical articulated robot properly by following this operation manual.
   Using the product with the vertical articulated robot not being certainly retained or affixed may cause abnormal noise, vibration, malfunction or shorten the product life.

1 Names of Robot Parts

1.1 Ceiling-mount Specification

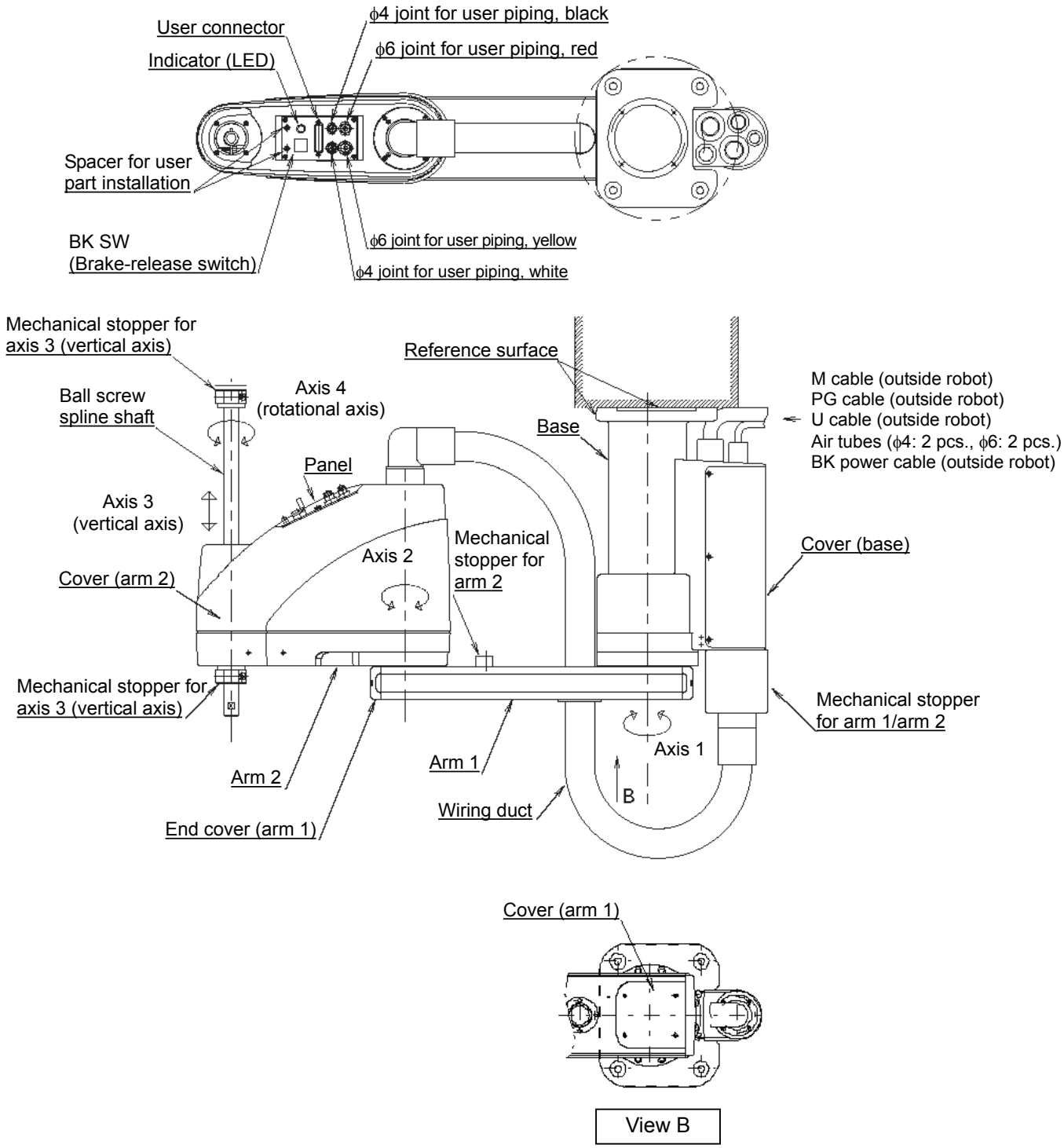

* The inverse specification is installed upside down.

1.2 Labels

The following labels are attached on the robot and controller. Be sure to observe the instructions and cautions written on the labels to ensure the correct use of the robot/controller.

Labels on the Robot

Prohibition of entry into the operation area

Warning on handling of the vertical axis

Warning against electric shock

Robot serial number

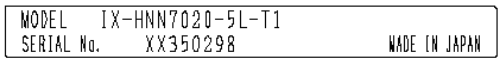

CE-certified robot (Provided only for CE-certified models)

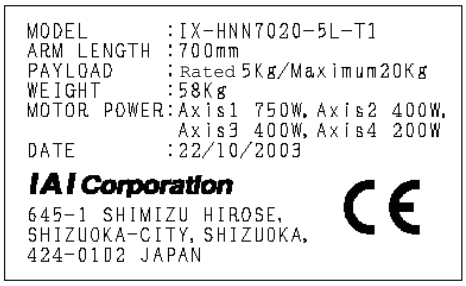

Labels on the Controller

Caution/warning on handling of the controller

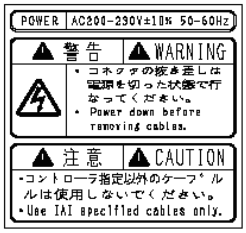

Designation of the connected robot

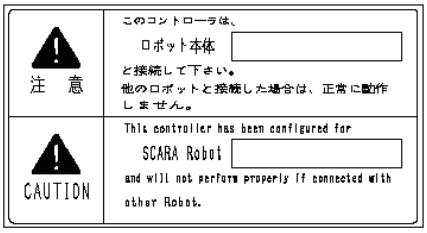

Controller serial number (Other than CE-certified models)

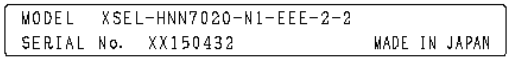

Controller serial number (CE-certified models)

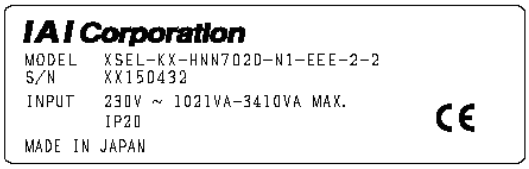

Danger **Warning** **Caution**

- Failure to observe the cautionary information provided on the labels may result in serious injury or damage to the robot.

1.3 Label Positions

Label Positions on the Robot

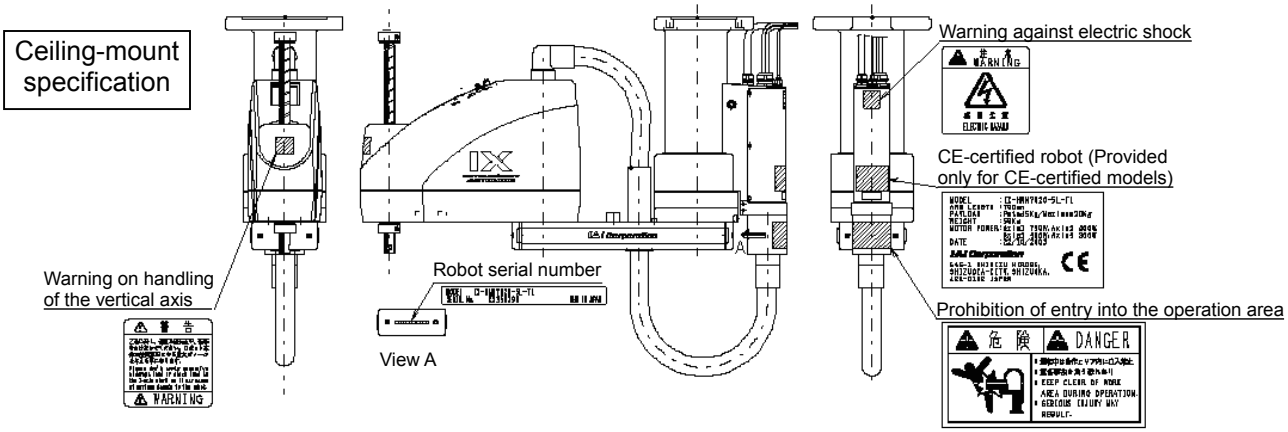

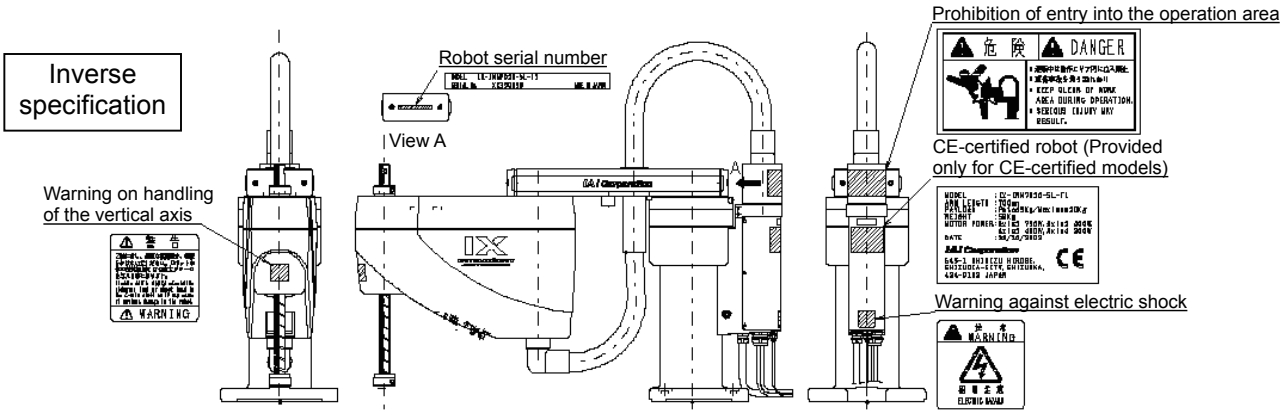

Label Positions on the Controller

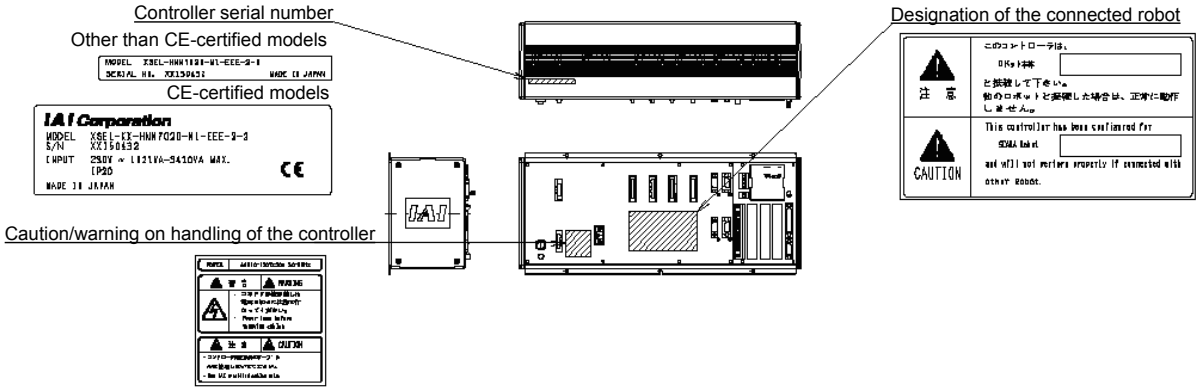

2 Transportation and Handling

2.1 Handling of the Carton

Each robot is packed with a controller prior to shipment.
When transporting the carton containing the robot and controller, observe the following items and be careful not to drop the carton or apply impact due to forcible contact:

- If the carton is heavy, one operator should not attempt to carry it alone.
- Place the carton on a level surface if it is to be left there for a while.
- Do not climb upon the carton.
- Do not place on the carton any heavy object that may cause the carton to deform, or an article whose shape allows a load to be concentrated at one point.

2.2 Packing Condition of the Robot

(1) Ceiling-mount specification

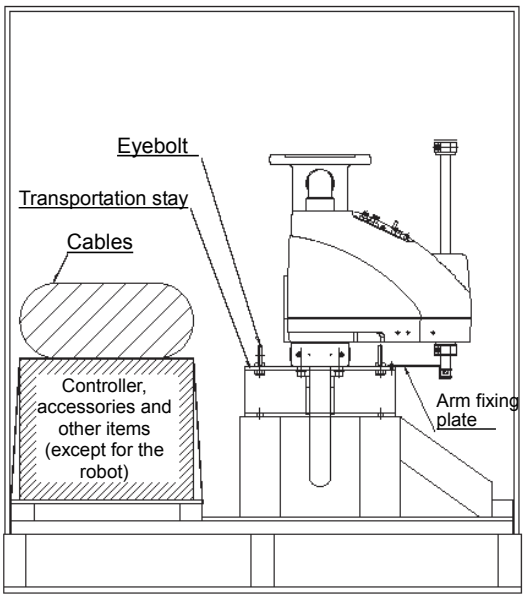

(2) Inverse specification

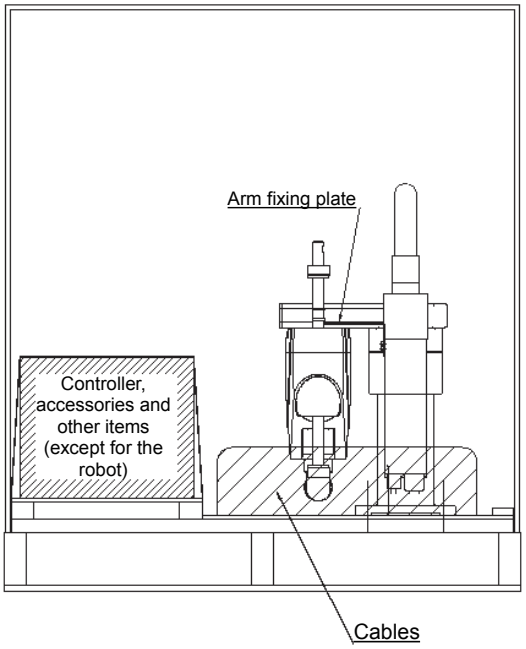

Warning **Caution**

- The robot and controller are very heavy. When transporting the carton containing the robot and controller, handle it with extra care so as not to drop the carton or apply impact due to forcible contact, as it may cause injury or damage to the robot or controller.
- Serious injury may result if the carton is dropped onto a person during transportation.
- Never stand below the carton as it is hoisted.
- Use a carrier device with sufficient loading capacity.
- If a machine or method is used that requires specified skills, it must be operated/performed by a person having the proper qualifications.

2.3 Handling of Individual Components

The robot and controller are supplied as a set.
Your robot cannot be used with the controller supplied with another robot.
When handling multiple robots, be careful not to lose their correct pairings with the controllers.

In the case of the inverse specification, once unloaded from the carton pallet the robot will not stand on its own.
Hold it by hand, or place a cushioning material on the floor and place the robot on its side upon the cushion.

2.4 Checking after Unpacking

After unpacking the carton, check the condition of the robot and other items contained in the carton.

Standard parts

Robot	1
Controller	1
Operation manual for robot	1
Operation manual for controller	1

Accessories

Eyebolt	Ceiling-mount type	4
	Inverse type	2
D-sub connector		1
Hood set (for D-sub connector)		1
Caution label		2
Positioning label		1
PIO flat cable		1
Cover (ceiling-mount type)		2
Cover-mounting bolt (ceiling-mount type) M3 x 8		8

Optional parts

PC software (type: IA-101-X-MW)

Floppy disk	2
PC connection cable	1
Hand-held emergency-stop switch	1
Operation manual for PC software	1

Absolute reset adjustment jig

Type: JG-1 (IX-HNN50□□/60□□, IX-INN50□□/60□□)
JG-3 (IX-HNN70□□/80□□, IX-INN70□□/80□□)

Positioning jig for axes 1 and 2	1
Positioning jig for axis 4	1

Danger **Note**

- Always operate the robot using the controller supplied with the robot in the same carton. Using another controller may result in an unexpected operation, damaged motor or other problem.
- After unpacking, be sure to confirm the condition of the robot and other items contained in the carton. Should you find a damaged or missing part, please contact IAI immediately.

2.5 Transporting the Robot

Use a dolly, forklift, crane, or other appropriate equipment for transportation. When transporting the robot, move it slowly so that it maintains its balance. Also, safeguard the robot against vibration or impact.

2.5.1 Transporting the Ceiling-mount Specification

Remove the arm-affixing plate and extend arm 1 and arm 2 straight.
Wrap the cables around the base and secure with gummed tape, etc., or simply attach to the transportation stay with gummed tape, etc.

When using a crane, install the supplied eyebolts (4 pcs.) onto the transportation stays. Remove the arm-affixing plate, extend arm 1 and arm 2 straight, and transport the robot in the posture shown below.

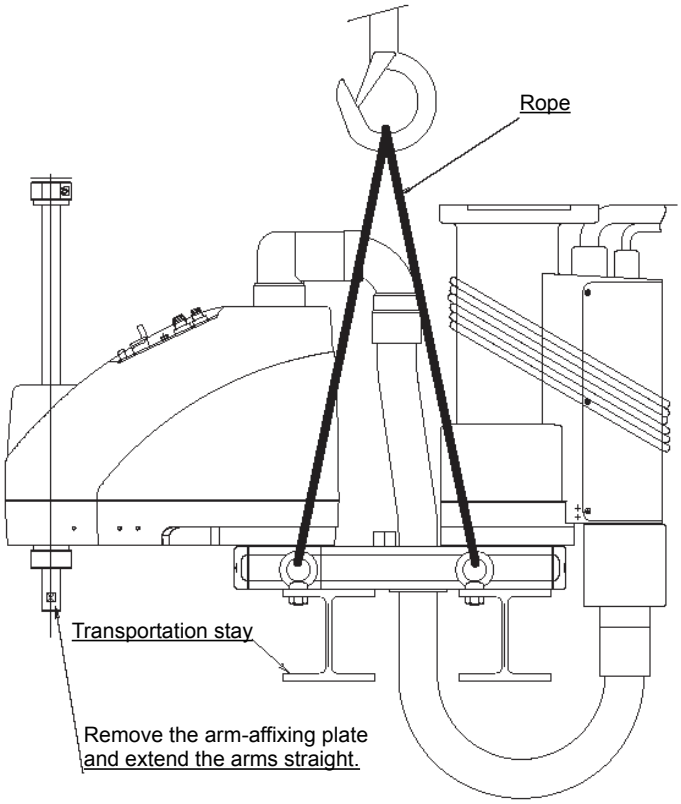

Ceiling-mount specification –	Posture of the robot when suspended with eyebolts for transportation

2.5.2 Transporting the Inverse Specification

Secure the arms with the arm-affixing plate, and wrap the cables around the base and secure with gummed tape, etc.

When using a crane, install the supplied eyebolts (2 pcs.) onto the robot body.
Remove the top cover from arm 1 and install the eyebolts at the positions shown below.

IX-INN50□□/60□□

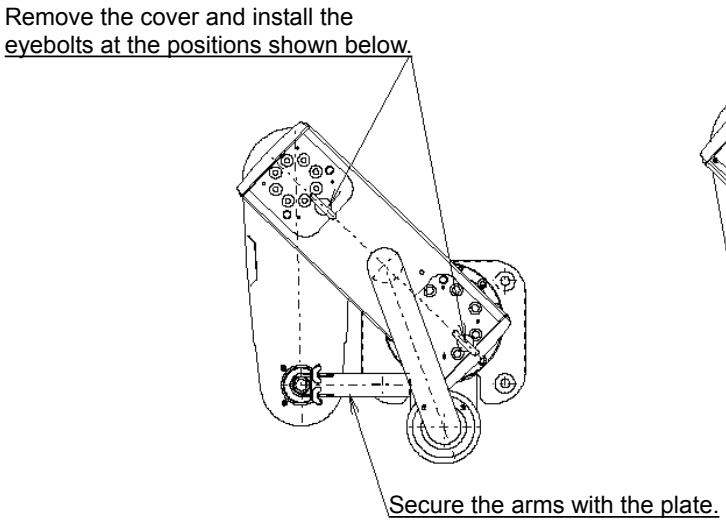

IX-INN70□□/80□□

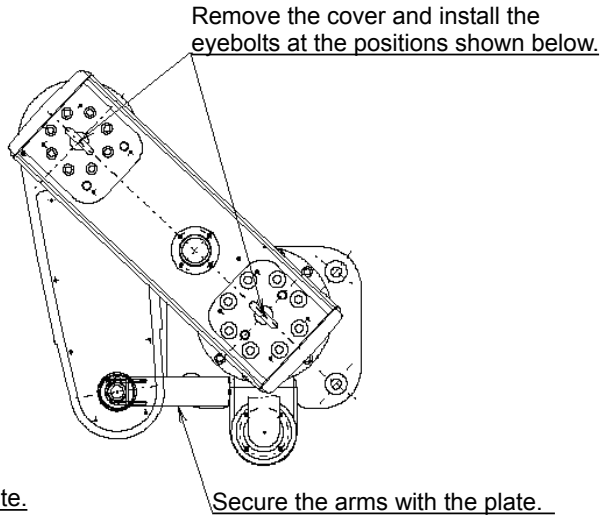

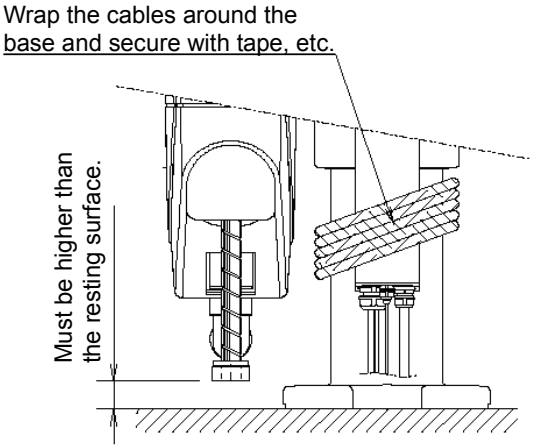

Danger **Warning**

- If the cables remain free, a person may be tripped by the trailing cables.
- Do not attempt to carry the robot by hand, as it may injure the back. Additionally, an injury may result if the robot is dropped onto the feet.
- Serious injury may result if a person is caught under a fallen robot during transportation.
- Never stand below the robot as it is hoisted.
- Use a hoist and ropes that can comfortably support the weight of the robot.
- If a machine or method is used that requires specified skills, it must be operated/performed by a person having the proper qualifications.

3 Installation Environment and Storage Environment

3.1 Installation Environment

Install the robot in an environment that satisfies the following conditions:

- Away from direct sunlight
- Not subject to radiated heat from a high-capacity energy source such as a heat-treating furnace
- Ambient temperature: 0°C to 40°C
- Humidity: 85% or less (non-condensing)
- Not exposed to corrosive or flammable gases
- Not subject to impact or vibration
- Not exposed to a significant amount of electromagnetic waves, ultraviolet rays or radiation
- Sufficient space is available to ensure safety in teaching and maintenance/inspection operations

Generally, the robot must be installed where the operator need not wear protective gear in order to work.

3.2 Installation Platform

The platform on which to install the robot receives a significant reactive force. Be certain the platform has sufficient rigidity to withstand the anticipated force.

- The surface on which the robot is fixed must have a thickness of 25 mm or more.
  The levelness of the robot installation surface must be at least ±0.05 mm.
- Drill and tap holes, as indicated below, into the installation surface of the platform.

Type	Tap size	Remarks
IX-HNN50□□/60□□ IX-INN50□□/60□□	M10	Effective thread: 10 mm or longer for steel (20 mm or longer for aluminum)
IX-HNN70□□/80□□ IX-INN70□□/80□□	M12	Effective thread: 12 mm or longer for steel (24mm or longer for aluminum)

- The platform must have sufficient rigidity to withstand not only the weight of the robot but also the dynamic moment of inertia that is generated when the robot is operated at maximum speed.
- Secure the platform to the floor or other rigid structure in a manner that prevents any movement due to operation of the robot.
- The installation platform must allow the robot to be mounted on a level surface.

3.3 Storage Environment

The storage environment conforms to the installation environment. If the robot is to be stored for a prolonged period of time, be sure the robot will not be exposed to dew condensation.
Unless otherwise specified, desiccant is not placed in the carton when shipped. If the robot is to be kept in an environment subject to condensation, provide preventive measures from over the carton or directly to the robot after unpacking.
The maximum storage temperature is 60°C for a short storage period. If the robot is to be stored for more than a month, the ambient temperature should not exceed 50°C.

Danger **Warning**

- Failure to provide a proper environment for installation and storage may shorten the service life of the robot, reduce its operation accuracy, or cause a malfunction or failure.
- Never use the robot in a flammable atmosphere. The robot may explode or ignite.

4 How to Install

Shown below is how to install SCARA Robot.

4.1 Installation Posture

○ : Available ×: Not available

Type	Horizontally Oriented Mount	Wall-Mount	Ceiling-Mount
	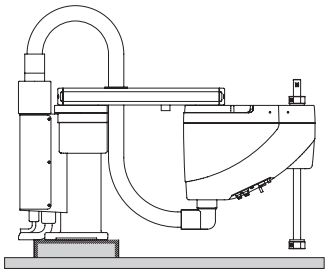	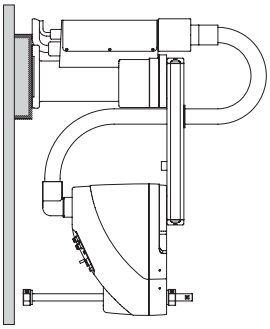	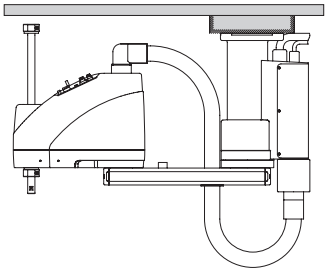
Ceiling-mount specification	×	×	○
inverse specification	○	×	×

4.2 Notes on Installation

In the case of the ceiling-mount specification, the robot will move to points above the base installation surface when the vertical axis (Z-axis) is moved to the top position.
In the case of the inverse specification, the robot will move to points below the base installation surface when the vertical axis (Z-axis) is moved to the bottom position.

Additionally, when performing an absolute reset, the vertical axis (Z-axis) must be moved to the top position in the case of the ceiling-mount specification or to the bottom position in the case of the inverse specification (origin-return operation).

Therefore, install the robot in such a way that the vertical axis will not collide with the ceiling or platform during an absolute reset.

It is recommended that the pedestal be constructed in such a way that contact with the robot will not occur within the robot's range of movement (see the figure below). If the pedestal cannot be constructed as shown below, be sure to reduce the robot's range of movement using soft-limits and prevent the robot from contacting the pedestal.

IX-INN5020/6020

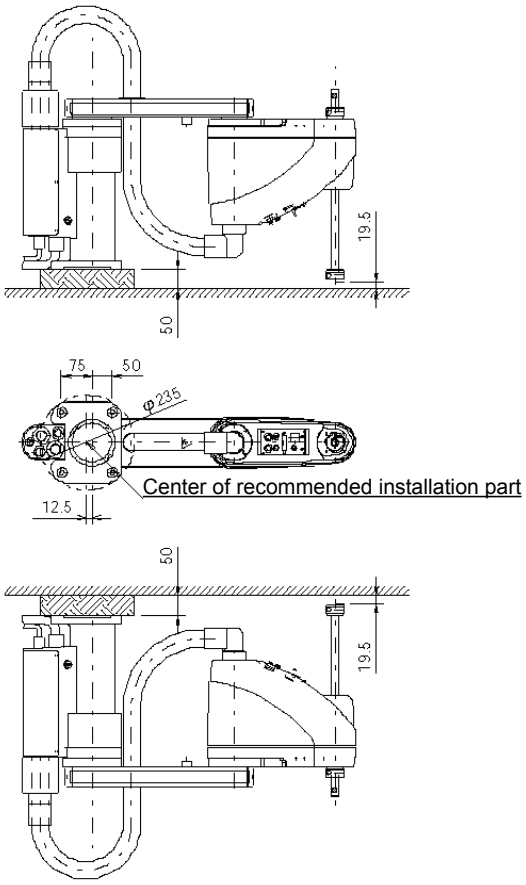

IX-INN5030/6030

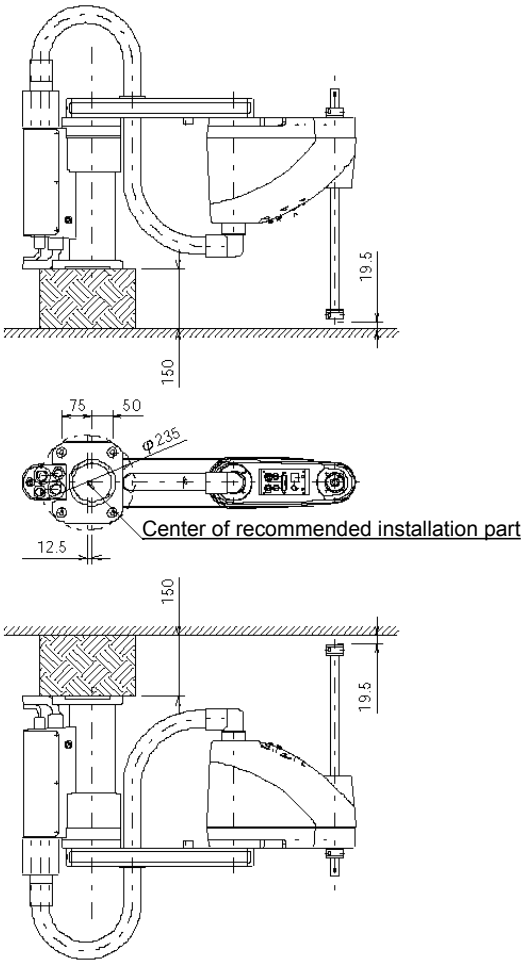

IX-HNN5020/6020

IX-HNN5030/6030

IX-INN7020/8020

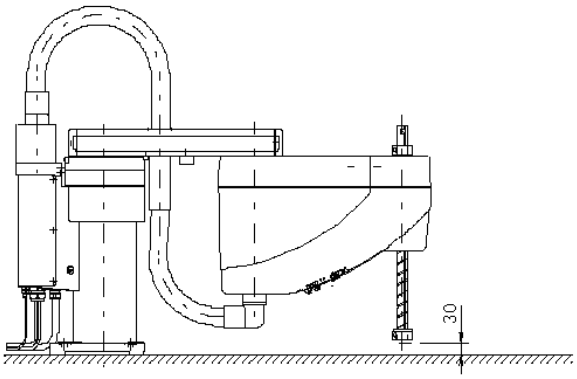

IX-INN7040/8040

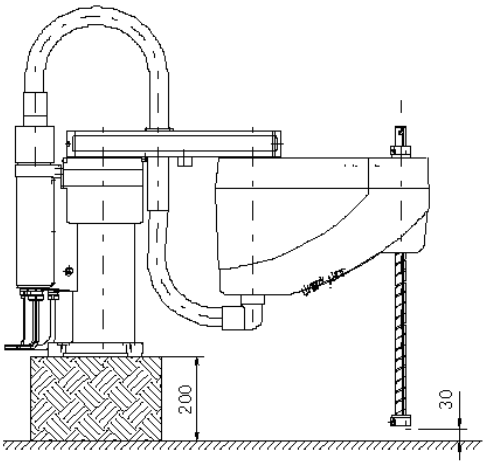

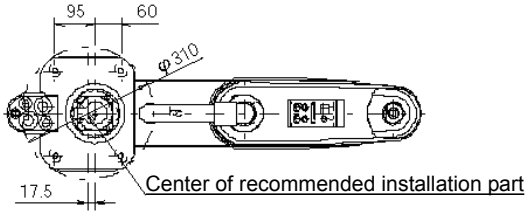

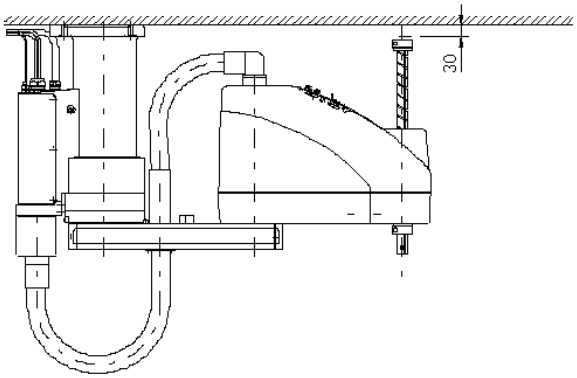

IX-HNN7020/8020

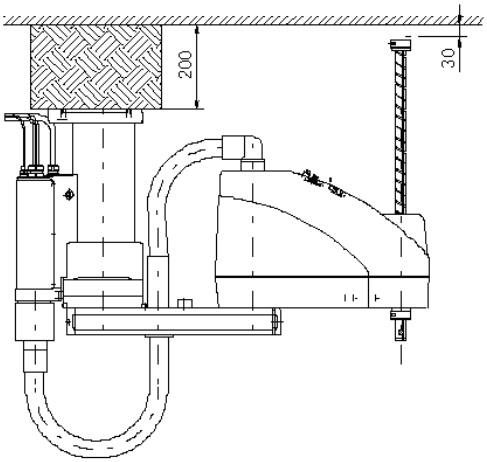

IX-HNN7040/8040

4.3 Installing the Robot

Install the robot on a level surface.

Secure the robot using hex bolts and washers.

Type	Bolt size	Tightening torque
IX-HNN50□□/60□□ IX-INN50□□/60□□	M10	60 N·m
IX-HNN70□□/80□□ IX-INN70□□/80□□	M12	104 N·m

For the hex bolts, use high-tension bolts with an ISO rating of 10.9 or higher.

IX-HNN50□□/60□□
IX-INN50□□/60□□

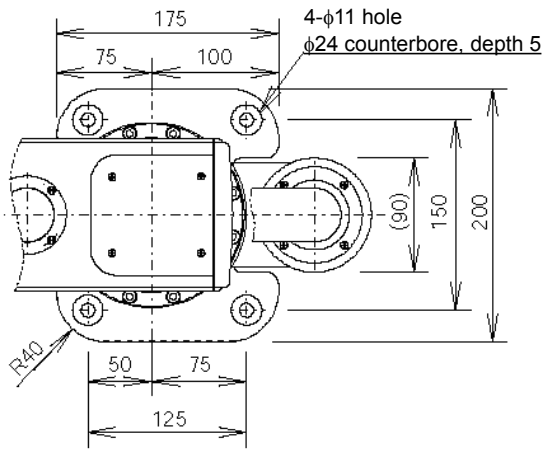

IX-HNN70□□/80□□
IX-INN70□□/80□□

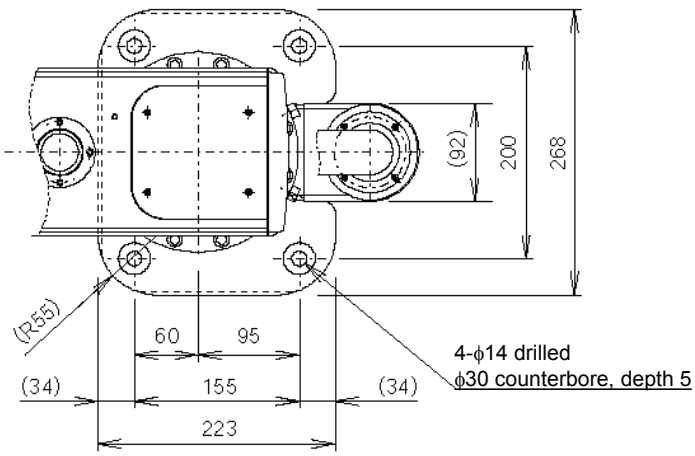

Warning **Caution**

- Always insert a washer below each bolt. Without a washer, the bolt-bearing surface may sink.
- Tighten the hex bolts securely to the correct torque. Improperly tightened bolts may reduce the accuracy of robot operation, and in the worst case cause the robot to overturn.

4.4 Connecting the Controller

The controller connection cables are attached on the robot (standard cable: 5 m, to air-tube joint: 150 mm).

Pay attention to the following items when connecting the controller:

- Connect to the robot of the serial number specified on the robot designation label provided on the front panel of the controller.

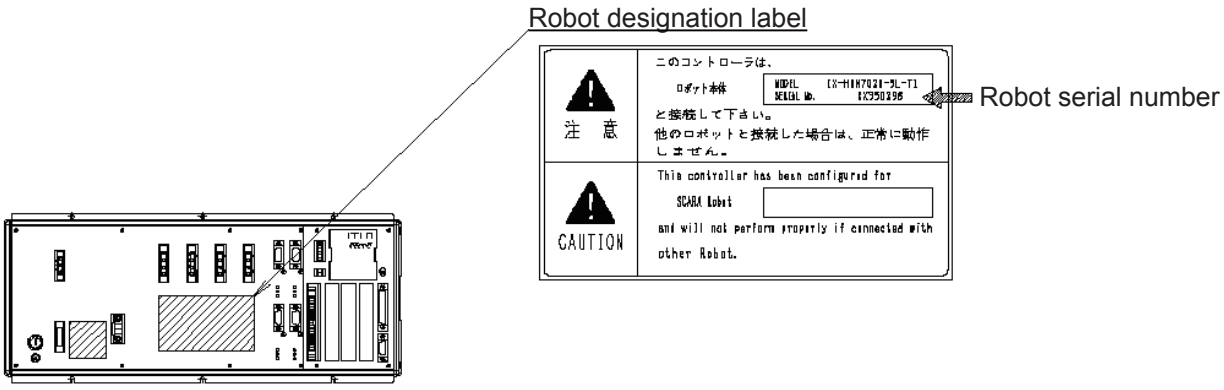

- Connect the cables securely after confirming that they are free from damage or bent connector pins.
- Connect each cable by aligning the indication on the marking tube on the cable with the indication on the controller panel.
- When installing the PG connector (D-sub connector), ensure correct orientation of the connector.
- The brake power circuit is provided on the primary side (high-voltage side). Therefore, provide a dedicated 24V DC power supply for the brake. Do not attempt to share the secondary circuit power sources such as I/O power source.
  The brake power to be supplied to Horizontal Articulated Robot should be 24V DC ±10% and the voltage source capacity 20W.
  The brake power to be supplied to the XSEL-PX/QX controller should be 24V DC ±10% and the voltage source capacity 9W.
  (Note) It is necessary to increase the voltage source capacity of the brake power source if brake actuators are to be connected to the 5th and 6th axes of the XSEL-PX/QX controller.
  [Refer to the section of the voltage source capacity and heat generation in the controller operation manual.]

Refer to the operation manuals for the controller and PC software for the procedures to connect the I/O cable, controller power cable, PC connection cable, etc.

⚠ Warning

- Be sure to connect to the robot of the serial number specified on the front panel of the controller. The controller will not operate properly if any other robot is connected. Failure to observe this warning may cause the robot to malfunction, resulting in a serious accident.
- Before connecting or disconnecting a cable, always turn off the power to the controller. Connecting/disconnecting a cable with the power supplied to the controller may cause the robot to malfunction, resulting in a serious accident.
- Installing the connectors into the wrong sockets may cause the robot to malfunction. Be sure to check the designation on the cable with that on the controller panel before plugging in any connector.
- If the connectors are not inserted securely, the robot may malfunction and generate the risk of danger. Be sure to affix each connector with the supplied screws.

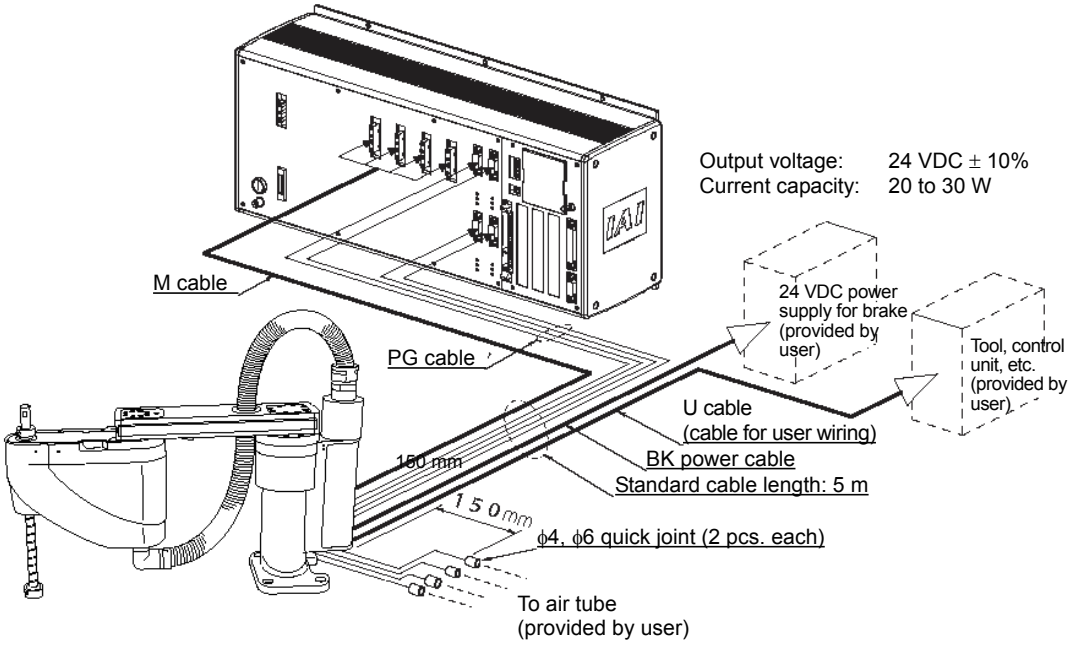

Warning

- Before connecting or disconnecting a cable, always turn off the power to the controller. Connecting/disconnecting a cable with the power supplied to the controller may cause the robot to malfunction, resulting in a serious accident.
- Installing the connectors into the wrong sockets may cause the robot to malfunction. Be sure to check the designation on the cable with that on the controller panel before plugging in any connector.
- If the connectors are not inserted securely, the robot may malfunction and generate the risk of danger. Be sure to affix each connector with the supplied screws.

4.5 Checking after Installation

Once the robot has been installed, check the following items:

- Visually check the robot, controller and cables for dents and other abnormalities.
- Confirm that the cables are connected properly and that the connectors are inserted securely.

Warning

- Failure to perform these checks may result in a malfunctioning robot or a damaged controller or robot.

5 Precautions for Use

5.1 Reference Acceleration/Deceleration Settings

Use the robot based on appropriate acceleration/deceleration settings by referring to the following graph:

(1) PTP operation

IX-HNN50□□/60□□
IX-INN50□□/60□□
Reference acceleration/deceleration settings for PTP operation

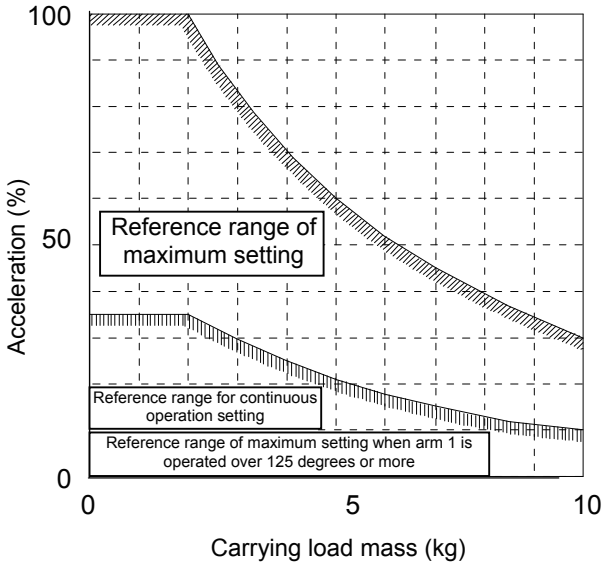

IX-HNN70□□/80□□
IX-INN70□□/80□□
Reference acceleration/deceleration settings for PTP operation

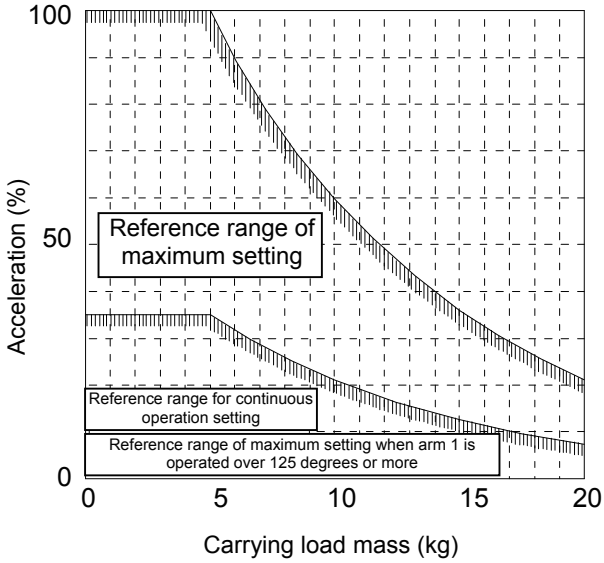

Caution

- To operate the robot at the maximum acceleration, provide a stopping period of three seconds or more after each acceleration/deceleration.
- When arm 1 is operated over 125 degrees or more, use the reference range for the continuous operation setting as the reference range of the maximum setting. The continuous operation setting value should be one-third the appropriate maximum value thus set.
- Start from the appropriate reference range for the continuous operation setting, and then gradually raise the value for the purpose of adjustment.
- If an overload error occurs, lower the acceleration setting as appropriate or provide an appropriate stopping time following each acceleration/deceleration.
- Depending on the position of the vertical axis, the robot may generate vibration when axis 1, axis 2 or the rotational axis turns. If vibration occurs, lower the acceleration as appropriate.
- To move the robot horizontally at high speed, keep the vertical axis as close as possible to the top position. If the vertical axis is operated at the bottom position, the ball screw spline shaft will bend and the vertical axis will be disabled.
- Be careful that the moment of inertia of axis 4 does not exceed the permissible value. (Refer to 5.3, “Carrying Load.”)
- The carrying load indicates a load above the rotational center of axis 4.
- Operate the robot by using an appropriate acceleration coefficient as determined by the mass of the tip. Failure to do so may cause the drive part to wear prematurely or may result in damage or vibration.

(2) CP operation

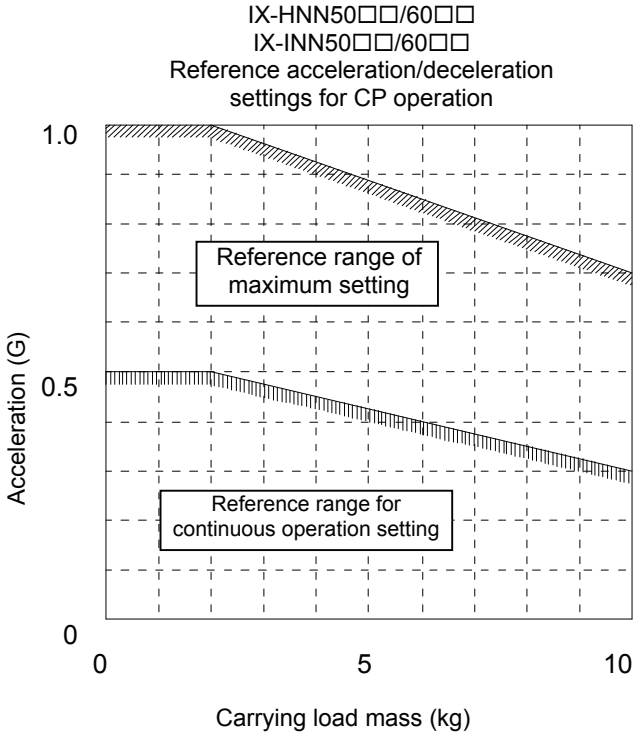

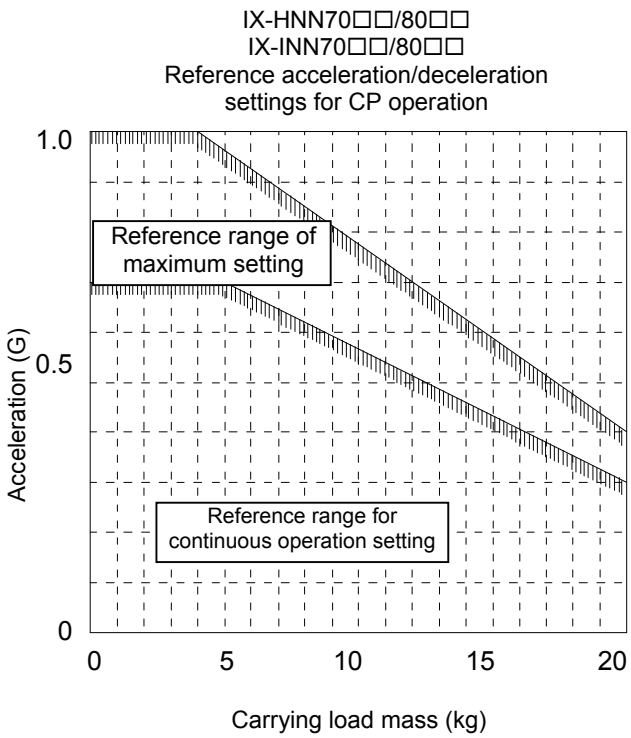

Caution

- To operate the robot at the maximum acceleration, provide a stopping period of three seconds or more after each acceleration/deceleration.
- Start from the appropriate reference range for the continuous operation setting, and then gradually raise the value for the purpose of adjustment.
- If an overload error occurs, lower the acceleration setting as appropriate or provide an appropriate stopping time following each acceleration/deceleration.
- Depending on the position of the vertical axis, the robot may generate vibration when axis 1, axis 2 or the rotational axis turns. If vibration occurs, lower the acceleration as appropriate.
- To move the robot horizontally at high speed, keep the vertical axis as close as possible to the top position. If the vertical axis is operated at the bottom position, the ball screw spline shaft will bend and the vertical axis will be disabled.
- Be careful that the moment of inertia of axis 4 does not exceed the permissible value. (Refer to 5.3, “Carrying Load.”)
- The carrying load indicates a load above the rotational center of axis 4.
- Operate the robot by using an appropriate acceleration coefficient as determined by the mass of the tip. Failure to do so may cause the drive part to wear prematurely or may result in damage or vibration.

5.2 Tools

The tool mounting part must have sufficient strength and rigidity, along with adequate fastening power to prevent positional shift.

It is recommended that a tool be installed over a split ring, span ring or other appropriate part. A sample configuration of tool installation is given below.

The diameter of each tool must not exceed 100 mm. A tool larger than this dimension will interfere with the robot within the robot's range of movement.

Adjust the position (direction) of axis 4 (rotational axis) using the D-cut surface at the tip of axis 4.

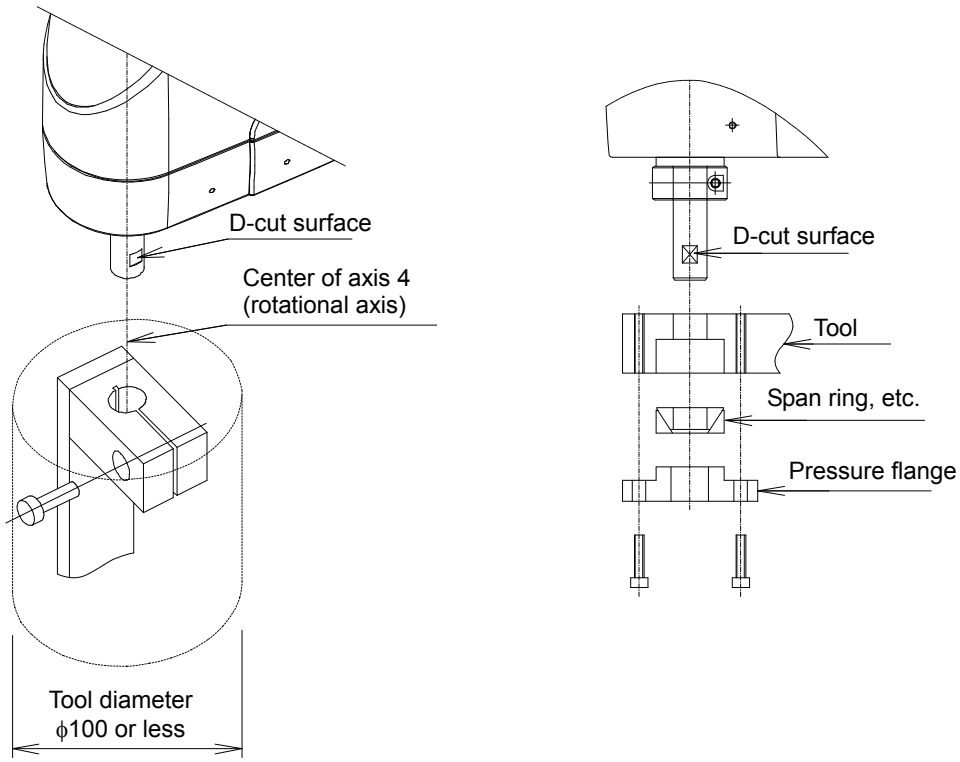

Warning **Caution**

- Turn off the power to the controller and robot before installing a tool.
- If the tool mounting part does not have sufficient strength, it may break while the robot is operating and cause the tool to detach and fly off.
- If the tool diameter exceeds 100 mm, the tool will contact the robot within its range of movement and cause damage to the tool, work and/or robot.
- Avoid attachment of the tool at the D-cut surface via thread fastening. Doing so may damage the D-cut positioning surface.

5.3 Carrying Load

Load capacity

Type	Rated load capacity	Maximum load capacity
IX-HNN50□□/60□□ IX-INN50□□/60□□	2 kg	10 kg
IX-HNN70□□/80□□ IX-INN70□□/80□□	5 kg	20 kg

Load's permissible moment of inertia

Type	Permissible moment of inertia	Remarks
IX-HNN50□□/60□□ IX-INN50□□/60□□	0.06 kg·m^2	Both rated and maximum
IX-HNN70□□/80□□ IX-INN70□□/80□□	0.10 kg·m^2	

Load offset (from the center of axis 4 (rotational axis))
50 mm or less

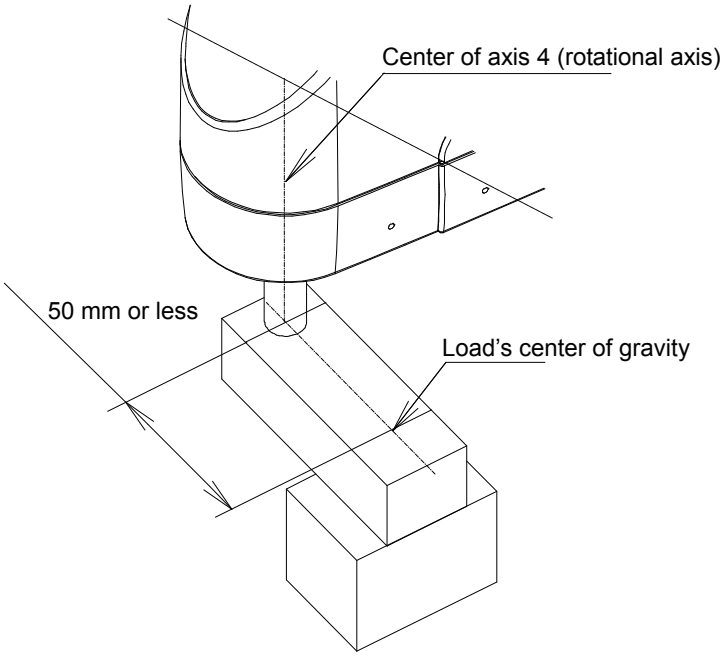

Caution

- Set appropriate acceleration/deceleration according to the mass of the tip and moment of inertia. Failure to do so may cause the drive part to wear prematurely or may result in damage or vibration.
- If vibration occurs, lower the acceleration/deceleration as appropriate.
- If the load gets offset, the robot becomes more likely to cause vibration. Design the tools so that the load's center of gravity aligns with the center of axis 4.
- Do not move the robot horizontally with axis 3 (vertical axis) extended. It may cause the vertical axis to bend and disable the axis. To move the robot horizontally with axis 3 extended, adjust the speed and acceleration/deceleration as appropriate.

5.4 User Wiring and Piping

The robot comes with standard cables and tubes that the user can use in a desired wiring/piping configuration.

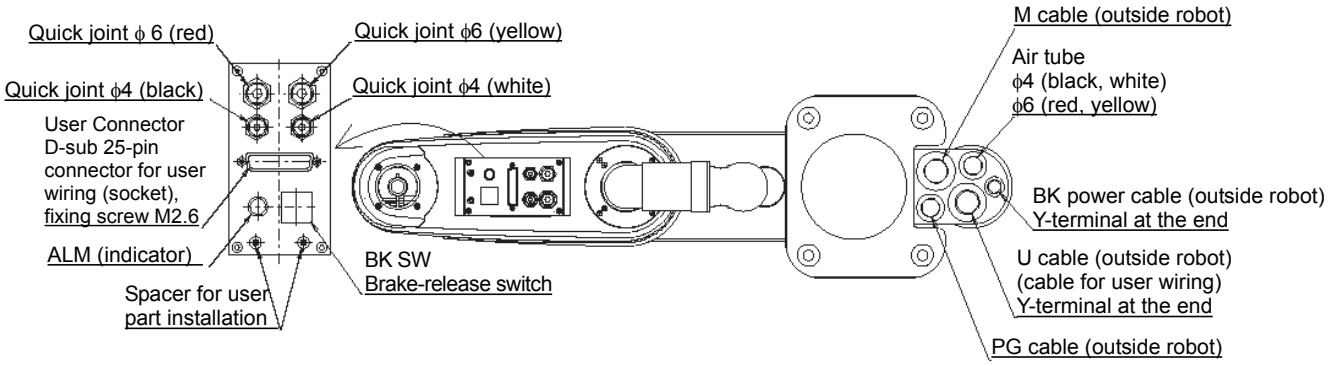

User connector specifications

Rated voltage	3.0 V
Permissible current	1.1 A
Conductor size and number of wires	AWG 26 (0.15 mm^2), 25 wires
Other	Twisted-pair cable (1 to 24), shielded

Piping specifications

Normal service pressure	0.8 MPa
Dimensions (outer diameter x inner diameter) and number of tubes	ϕ4 mm x ϕ2.5 mm, 2 pieces
	ϕ6 mm x ϕ4 mm, 2 pieces
Working medium	Air

ALM (indicator) specifications

Rated voltage	24 VDC
Rated current	12 mA
Illumination color	Red LED

Shape of Y-terminal

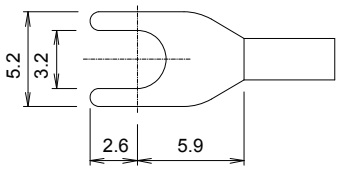

Spacer for user part installation

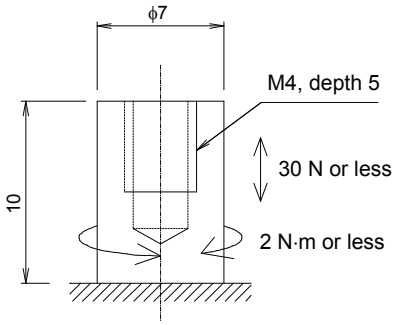

External force applied to the spacers must not exceed 30 N in the axial direction or 2 N·m in the rotating direction (for each spacer).

The robot comes with a 25-pin plug for the D-sub connector for user wiring.
Solder a user-supplied cable to the D-sub connector (plug), attach the supplied hood, and then connect to the user connector (socket). Use a shielded cable with an outer diameter of ϕ11 or less.

To turn on the indicator, the user must configure a dedicated circuit that uses the controller I/O output signal, etc.

User connector pins and corresponding Y-terminals

Inside unit Cable

	Arm 2 side		Controller side		
	Connection	No.	Y-terminal designation	Wire color	Connection
User Connector	D-sub, 25-pin	1	U1	Orange 1 red	Y-terminal
		2	U2	Orange 1 black	
		3	U3	Light gray 1 red	
		4	U4	Light gray 1 black	
		5	U5	White 1 red	
		6	U6	White 1 black	
		7	U7	Yellow 1 red	
		8	U8	Yellow 1 black	
		9	U9	Pink 1 red	
		10	U10	Pink 1 black	
		11	U11	Orange 2 red	
		12	U12	Orange 2 black	
		13	U13	Light gray 2 red	
		14	U14	Light gray 2 black	
		15	U15	White 2 red	
		16	U16	White 2 black	
		17	U17	Yellow 2 red	
		18	U18	Yellow 2 black	
		19	U19	Pink 2 red	
		20	U20	Pink 2 black	
		21	U21	Orange 3 red	
		22	U22	Orange 3 black	
		23	U23	Light gray 3 red	
		24	U24	Light gray 3 black	
		25	U25	White 3 red	
ALM	Indicator (LED)		LED +24V	White 3 black	
			LED G24V	Yellow 3 red	
To D-sub connector frame			FG	Green	

To base

Warning

- Before commencing wiring/piping work, turn off the power to the controller and the power/air supplies to the robot. Failure to do so may cause the robot to malfunction.
- Use cables and tubes within their specifications. Failure to do so may result in fire or short circuit due to an overheated cable, or may cause air leaks.
- Connect the shielded cable to the hood. Otherwise, the robot may malfunction due to noise.
- Secure the supplied D-sub connector using the screws on the hood.

6 Inspection/Maintenance

6.1 Inspection/Maintenance

Your horizontal articulated robot must be inspected daily and on a regular basis to ensure safe, efficient operation. Perform the necessary inspections after confirming the maintenance/inspection items required for your IAI robot, as defined in this section.

The following items must be adjusted at our factory. Do not disassemble the following components or cut cables at the user site:

Disassembly of servo motor
Disassembly of ball speed reducer
Disassembly of ball-screw spline
Disassembly of bearing
Disassembly of harmonic speed reducer
Disassembly of brake
Cutting of cable

IAI will not be responsible for any malfunction or damage resulting from the conduct of any operation cited above.

Warning

- Performing inspection or maintenance without fully understanding the details of work may result in a serious accident.
- If inspections are neglected, the drive part may wear prematurely or the robot may malfunction unexpectedly.

6.1.1 Daily Inspection

Check the following items daily before and after operating the robot.
Observe the precautions for work near the robot and for inspection/maintenance/adjustment operations when carrying out each check.

Check location	Description
Safety cage	Correct the deformation or positional shift of the cage. Confirm that the interlock mechanism is operating properly.
Robot	Check the robot mounting bolts for looseness. Check the exterior for abnormality, loose covers, flaws, dents, etc. (If the robot has flaws or other abnormalities, please contact IAI.) Check for abnormal move, vibration or noise.
Cables	Check the cables for flaws. Check the cable mounting parts for looseness.
Emergency-stop switch	Confirm that the emergency-stop switch functions properly.

6.1.2 Six-Month Inspection

Check the following items on the robot every six months.
Observe the precautions for work near the robot and for inspection/maintenance/adjustment operations when carrying out each check.

Check location	Description
Robot	Check the arm mounting sections for looseness. (If any of the arm mounting sections is loose, tighten the fastening parts securely.)
Ball-screw spline	Add grease.
Timing belts of axes 3 and 4	• Check the belt tension for axes 3 and 4. • Check the belts for flaws, cracks, wear, etc.
Connectors	Check the connectors for looseness.

If the robot has flaws or other abnormalities, please contact IAI.

⚠ Caution

- In case the grease got into your eye, immediately go to see the doctor to get an appropriate care.
- After finishing the grease supply work, wash your hands carefully with water and soap to rinse the grease off.

6.1.3 Yearly Inspection

Check the following items on the robot every year.
Observe the precautions for work near the robot and for inspection/maintenance/adjustment operations when carrying out each check.

Check location	Description
Harmonic speed reducer	Change the grease. (Based on 24-hour operation. Change the grease every three years or so if the robot is operated eight hours a day.)
Ball-screw spline	Check the shaft for looseness. (Contact IAI if an abnormality is found.)

Warning

- Performing inspection or maintenance without fully understanding the details of work may result in a serious accident.
- If inspections are neglected, the drive part may wear prematurely or the robot may malfunction unexpectedly.
- Display a “Work in Progress” sign so that other operators will not operate the controller, operation panel, etc.

6.2 How to Check/Adjust Belt Tension

6.2.1 Preparation

The following tools are required when checking/adjusting belt tension:

- Push-pull gauge (maximum measurement capability of 2 kg)
- Hex wrenches (2.5, 3, 4 and 5 mm)
- Spanners (5.5 and 8 mm)
- Phillips screwdriver
- Scale
- Pin (ϕ3, 40 to 80 mm in length)

Turn off the power to the controller. Do not cut off the 24 VDC power supply to the brake.

Warning **Caution**

- Performing inspection or maintenance without fully understanding the details of work may result in a serious accident.
- If inspections are neglected, the drive part may wear prematurely or the robot may malfunction unexpectedly.
- Display a “Work in Progress” sign so that other operators will not operate the controller, operation panel, etc.

6.2.2 Removing the Cover

(1) With arms 1 and 2 extended as illustrated below, press the brake-release switch [1] to release the brake and then push down the vertical axis until the stopper contacts the pulley. (For the inverse specification, pull up the vertical axis until the stopper contacts the pulley.)
(2) Remove the countersunk head screws [2], [3] and [4] (four pieces each), in that order.
(3) Remove all connectors (UA, UB, BK and LED) and air tubes (four pieces) from the back of the panel.
(4) Move the cover to the position shown in the photograph.

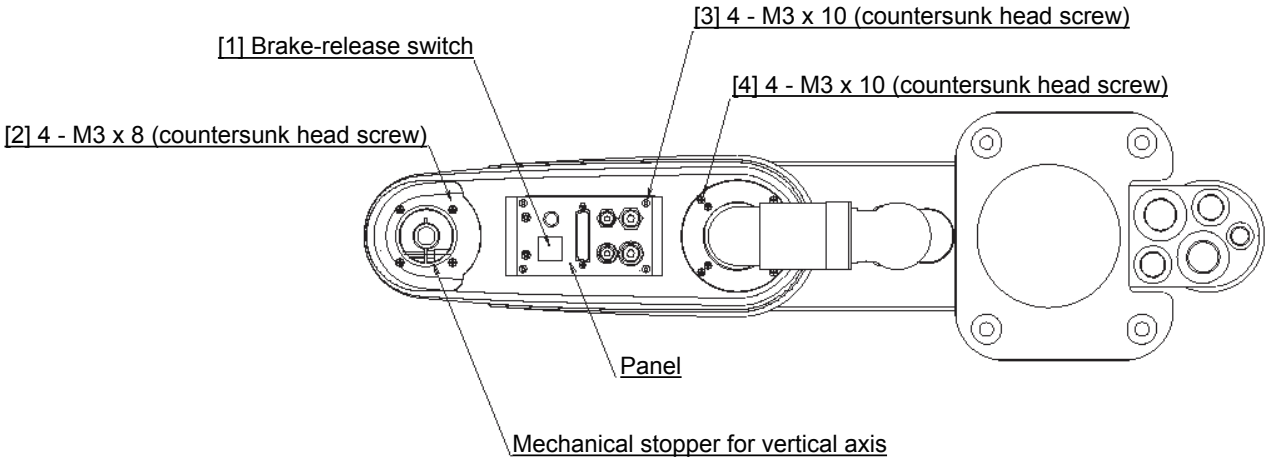

Caution

- Remove the four outer screws for the countersunk head screws (4).
- Do not remove the M/PG connectors at the rotary joint, since it will necessitate an absolute reset.
- The cover will not detach completely, since the M/PG connectors are still connected. Do not pull the cover forcibly.

6.2.3 Checking the Belt Tension

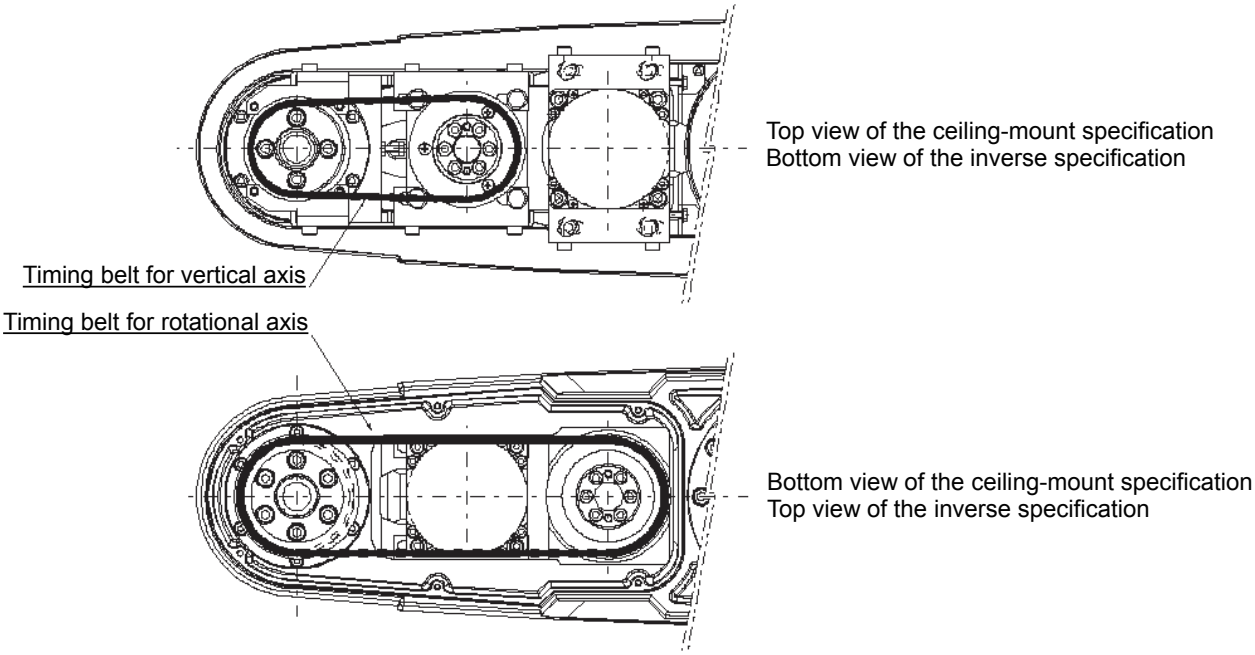

6.2.4 Checking the Belt Tension for the Vertical Axis

Using a push-pull gauge, push the timing belt for vertical axis with a force of A (gf) and measure the amount of deflection.
If the deflection is B (mm), the belt tension is normal.
If not, adjust the belt tension by referring to 6.2.6, “Adjusting the Belt Tension for the Vertical Axis.”

Type	A	B
IX-HNN50□□/60□□ IX-INN50□□/60□□	340 ~ 410 (gf)	1.35 (mm)
IX-HNN70□□/80□□ IX-INN70□□/80□□	550 ~ 650 (gf)	2.2 (mm)

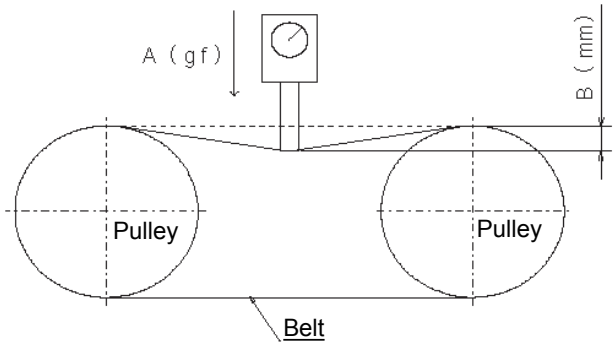

Caution

- When measuring deflection, do not use a gauge with a sharp tip that may damage the belt.

6.2.5 Checking the Belt Tension for the Rotational Axis

(1) Insert a ϕ 3 pin in the hole provided on one side of arm 2 (pin length: 40 to 80 mm) until the pin lightly contacts the belt, and then mark a point off C (mm) from the surface of arm 2.

(2) Using a push-pull gauge, push the pin with a force of D (kgf). The belt tension is normal if the mark on the pin aligns with the surface of arm 2. If not, adjust the belt tension by referring to 6.2.7, “Adjusting the Belt Tension for the Rotational Axis.”

Type	C	D
IX-HNN50□□/60□□ IX-INN50□□/60□□	2.48 (mm)	1.3 ~ 1.5 (kgf)
IX-HNN70□□/80□□ IX-INN70□□/80□□	3.60 (mm)	1.6 ~ 2.0 (kgf)

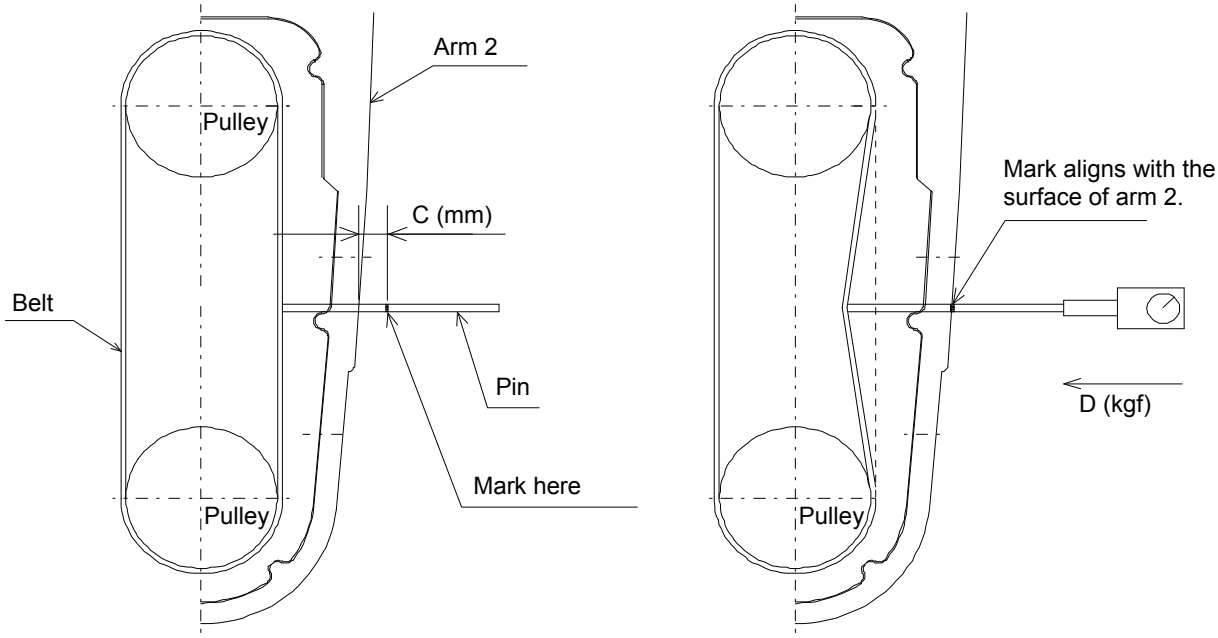

Caution

- Do not use a pin with a sharp tip that may damage the belt.

6.2.6 Adjusting the Belt Tension for the Vertical Axis

(1) Loosen the four M5 nuts [4] slightly, making sure the fastened points do not become overly loose.
(2) Loosen the lock nut [5], and then turn the bolt with urethane stopper [6] to tension the belt properly.
(3) Check the belt tension by referring to 6.2.4, “Checking the Belt Tension for the Vertical Axis.”
(4) Tighten the M5 nuts [4] loosened in step 1, and then tighten the lock nut [5].
(5) Check the belt tension again by referring to 6.2.4, “Checking the Belt Tension for the Vertical Axis.”
(If the deflection has changed, perform the adjustment again.)

6.2.7 Adjusting the Belt Tension for the Rotational Axis

(1) Loosen the bolts [1] and [2] (four pieces each) slightly, making sure the fastened points do not become overly loose.
(2) Turn the bolts [3] (two pieces) to tension the belt.
(3) Check the belt tension by referring to 6.2.5, “Checking the Belt Tension for the Rotational Axis.”
(4) Tighten the bolts [1] and [2] loosened in step 1.
(5) Finally, tighten the bolts [3] securely.
(6) Check the belt tension again by referring to 6.2.5, “Checking the Belt Tension for the Rotational Axis.”
(If the deflection has changed, perform the adjustment again.)

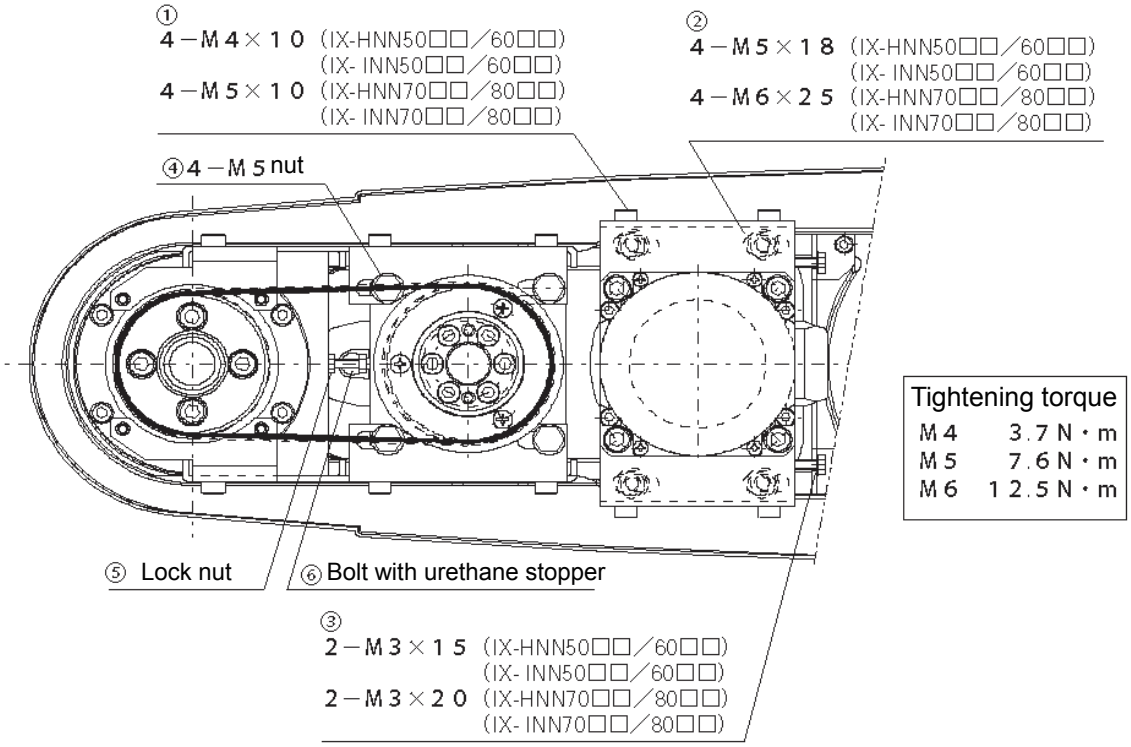

Caution

- Be careful not to overtighten screws [1], [2] and [4].
- After fixing the axis center, be sure to confirm once again that the deflection meets the specified value.

6.2.8 Installing the Cover

(1) Place the cover on the robot and connect the connectors, cables and air tubes installed as illustrated below. (Absolute reset, as described on the following page, is not required after the belt tension is only checked.)

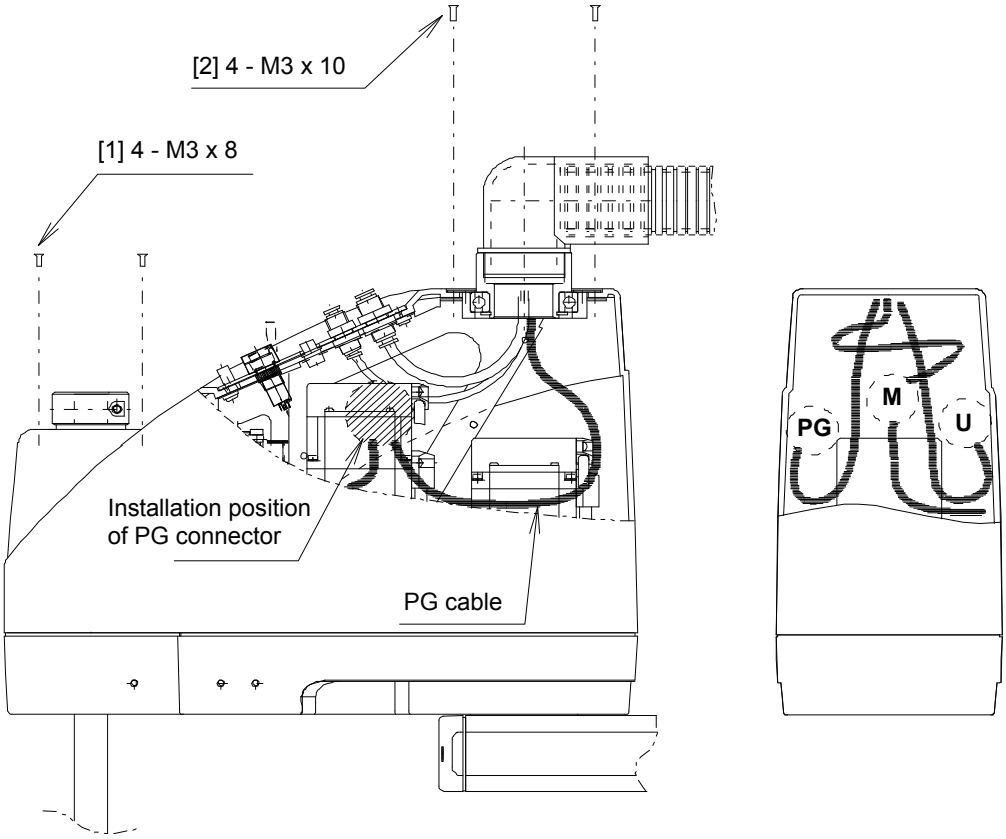

Caution

- Check the marking tubes to prevent improper connections.
- Be careful not to bend the air tubes.
- Be careful not to let the cables contact the pulley.
- Check if the connectors are fully inserted.
- Be careful not to pinch the cables.

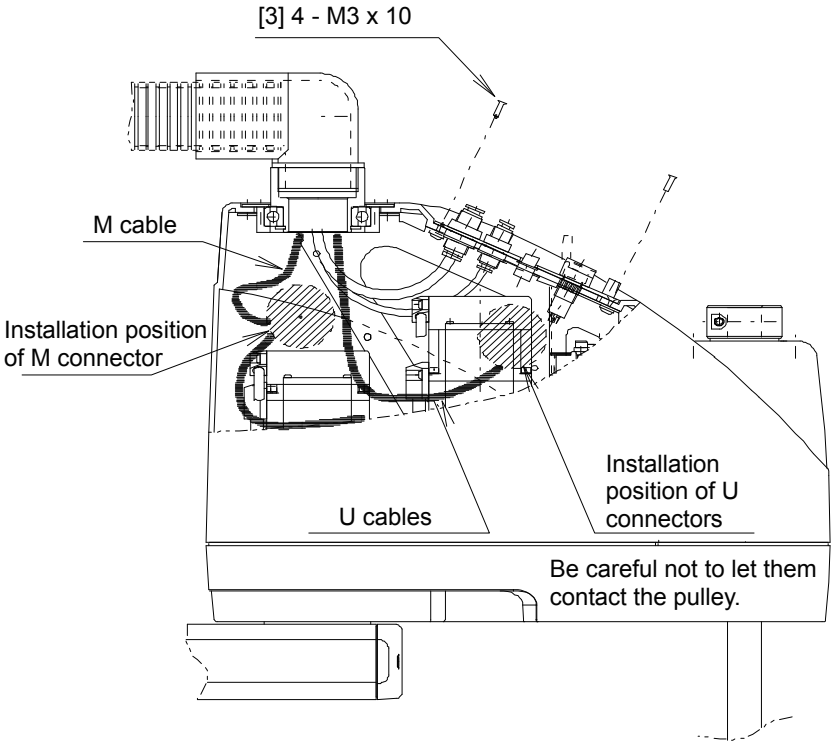

(2) Perform an absolute reset for the rotational axis and vertical axis. This completes the procedure for installation of the cover.
(Refer to 6.4, “Absolute Reset Procedure.”)

Caution

- Check the marking tubes to prevent improper connections.
- Be careful not to bend the air tubes.
- Be careful not to let the cables contact the pulley.
- Check if the connectors are fully inserted.
- Be careful not to pinch the cables.
- Perform an absolute reset for the rotational axis and vertical axis only after adjustment of the belt tension.

6.3 Battery Replacement

6.3.1 Preparation

The following items are required when replacing the batteries:

- Phillips screwdriver
- New dedicated batteries for IX: AB-3 (4 pieces)

Before replacing the batteries, turn off the power to the controller, control panel and other relevant units.

Warning **Caution**

- Performing inspection or maintenance without fully understanding the details of work may result in a serious accident.
- Display a “Work in Progress” sign so that other operators will not operate the controller, operation panel, etc.
- Use dedicated batteries for IX. Batteries for the old model (IH) cannot be used.

6.3.2 Battery Replacement Procedure

(1) Remove the countersunk head screws [1] (six pieces) and detach the cover (base).
(2) Remove the batteries from the battery holder.
(3) Remove the battery connectors and connect new batteries.

- After removing the old batteries, quickly connect new batteries (roughly within 5 minutes x number of batteries).
- If new batteries are not connected for a longer period, the rotation data will be lost and an absolute reset will become necessary.
- Replace batteries one axis at a time. If the batteries for all axes are replaced at once, the work may not be completed within the specified time.

(4) Install the batteries into the battery holder.

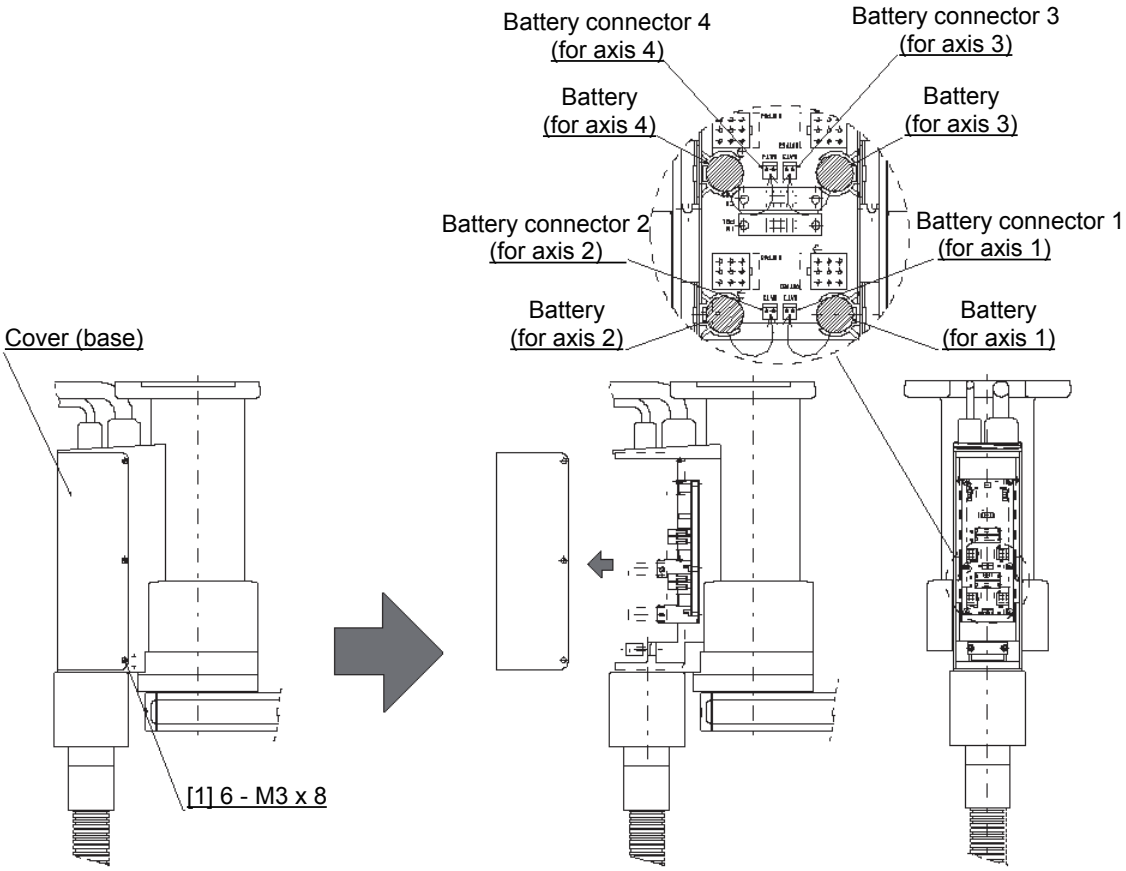

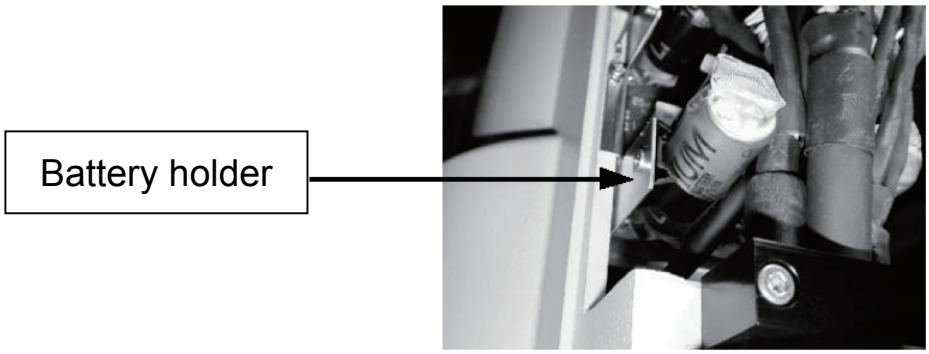

(5) Affix the cover (base) using the countersunk head screws [1] (six pieces) (tightening torque: 0.74 N·m).

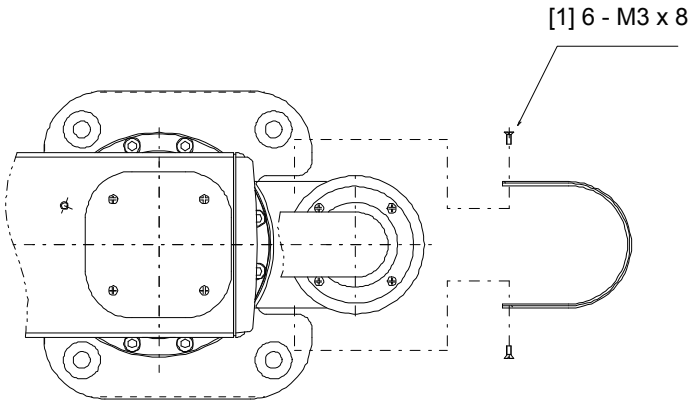

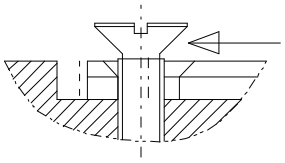

Do not tighten the screws to the specified torque in one go. First tighten the screws to the position shown to the left, and while pushing the cover in the direction of the arrow tighten the screws on both sides evenly to ensure tight sealing.

Caution

- When installing the cover (base), be careful not to pinch the cables inside.

6.4 Absolute Reset Procedure

6.4.1 Preparation for Absolute Reset

The following jig is required when performing an absolute reset:

- Absolute reset adjustment jig

Connect the cables for the robot, controller and PC, so the robot can be operated from the PC.
Before commencing the work, always confirm that the emergency-stop switch is functioning properly.
An absolute reset adjustment jig is always required when performing an absolute reset of the rotational axis or vertical axis. However, the jig is not always necessary when performing an absolute reset of arm 1 or arm 2.
(Rotation data can be reset as long as a positioning accuracy of “center of positioning mark label ±1 graduation” is ensured.)

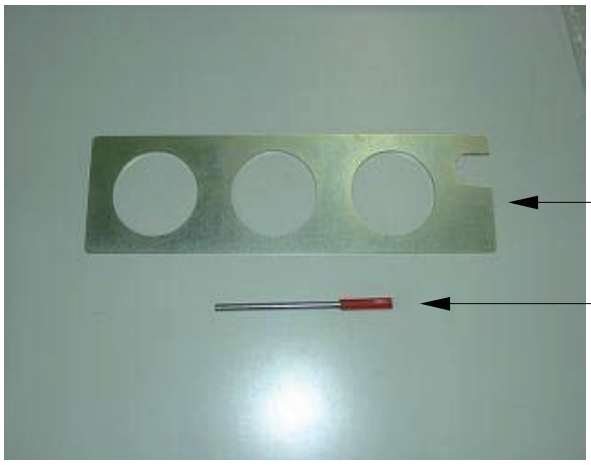

Absolute reset adjustment jig

JG-1 { IX-HNN50□□/60□□ / IX-INN50□□/60□□ }

JG-3 { IX-HNN70□□/80□□ / IX-INN70□□/80□□ }

Warning

- Performing inspection or maintenance without fully understanding the details of work may result in a serious accident.
- Display a “Work in Progress” sign so that other operators will not operate the controller, operation panel, etc.

6.4.2 Starting the Absolute Reset Menu

(1) Open the absolute reset window from the PC software.

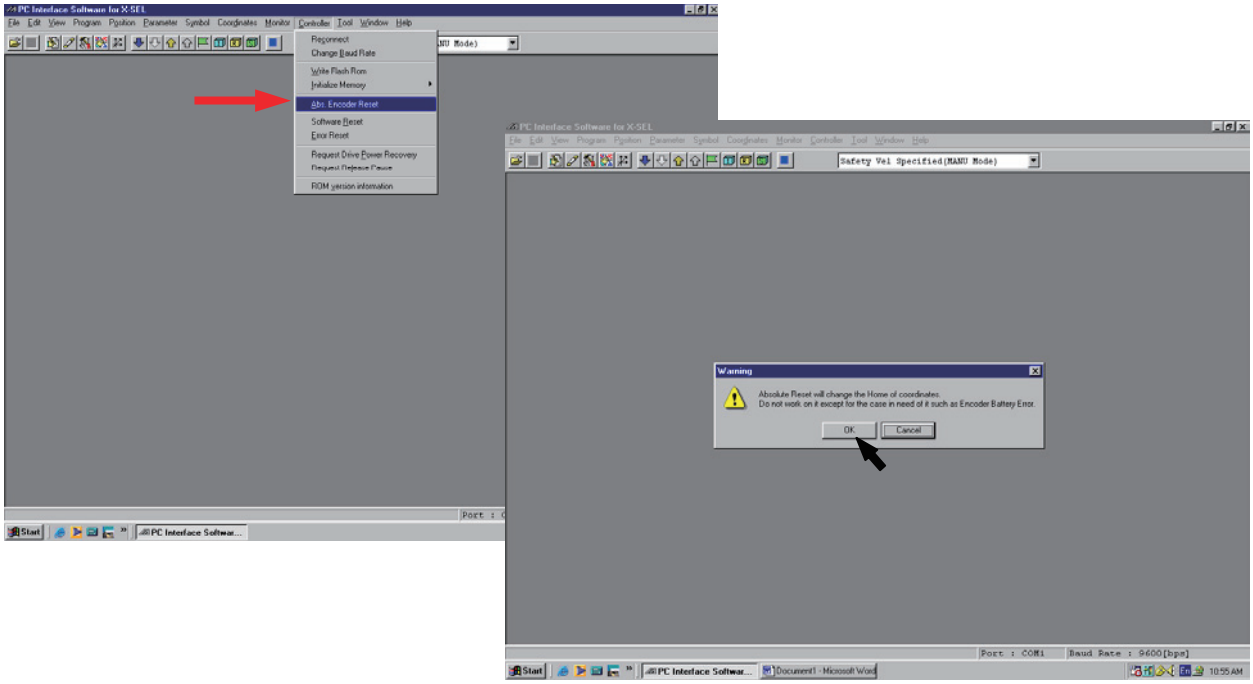

(2) The absolute reset window opens.

- One of three absolute reset screens—for arm 1, arm 2 and rotational axis + vertical axis—is displayed when a corresponding tab is clicked.

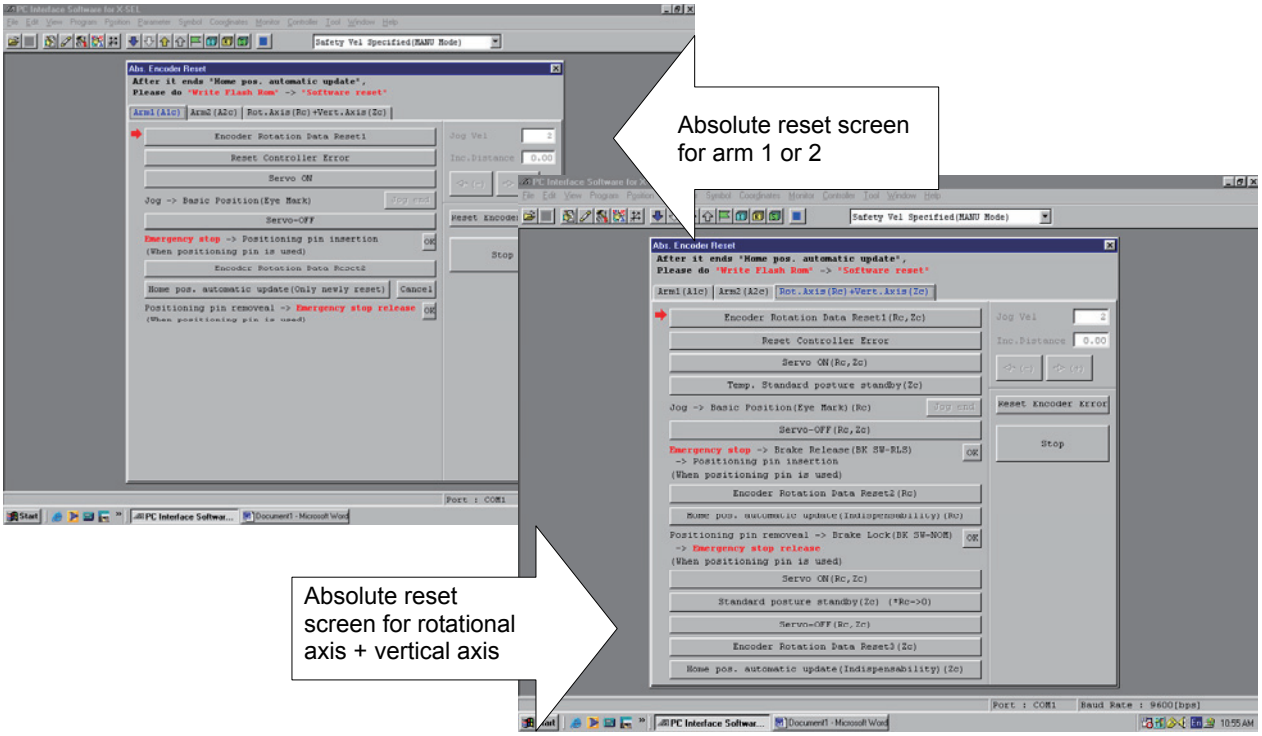

6.4.3 Absolute Reset Procedure for Arm 1 or 2

(1) Click the “Encoder Rotation Data Reset1” button.

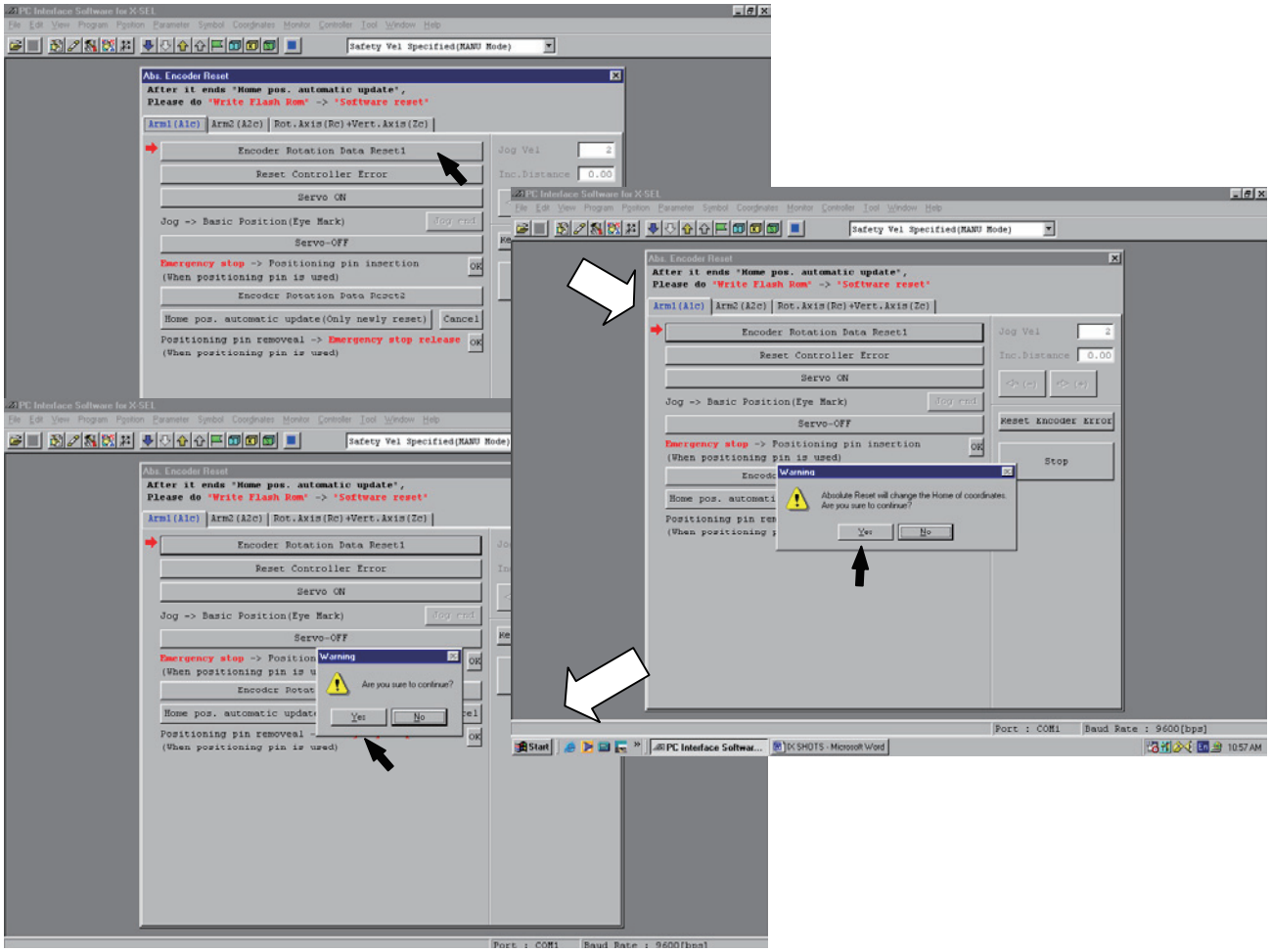

(2) Click the “Reset Controller Error” button.

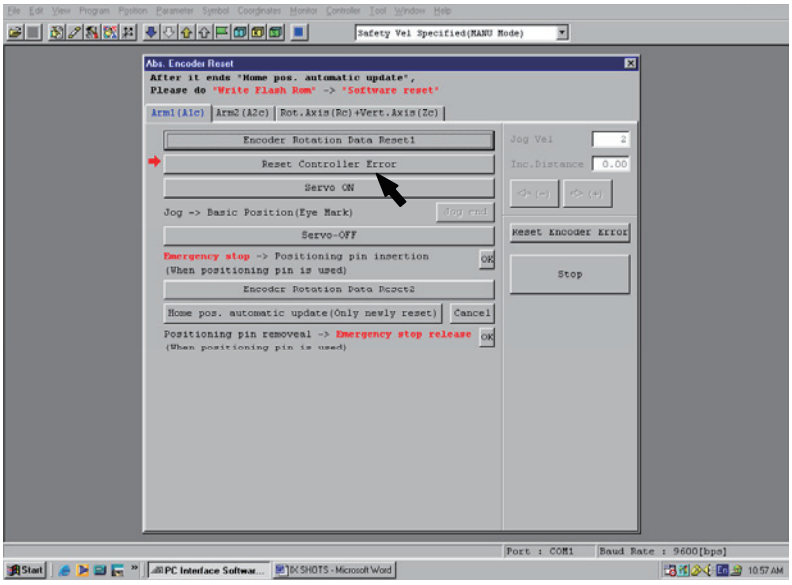

(3) Click the “Servo ON” button.

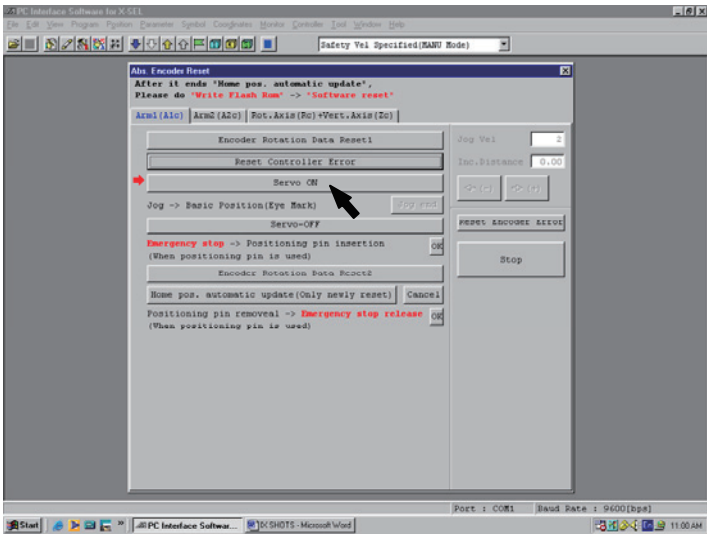

(4) Jog the arm to near the reference position (see reference position drawing in step 7), and click the “Jog end” button.

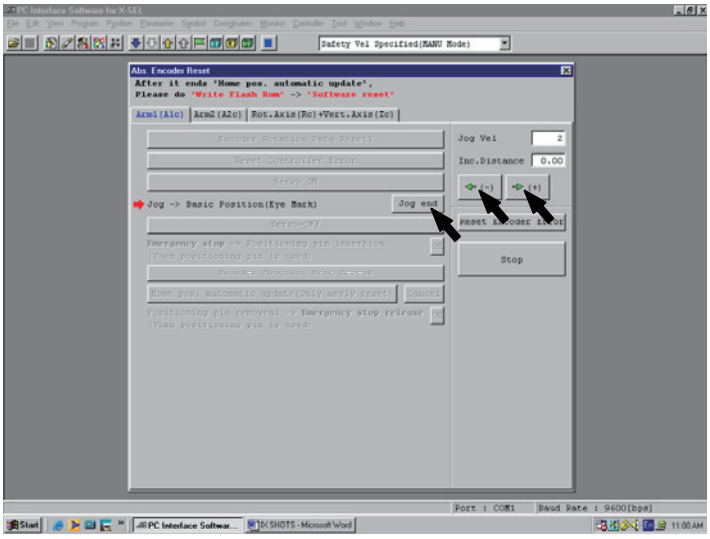

(5) Click the “Servo-OFF” button.

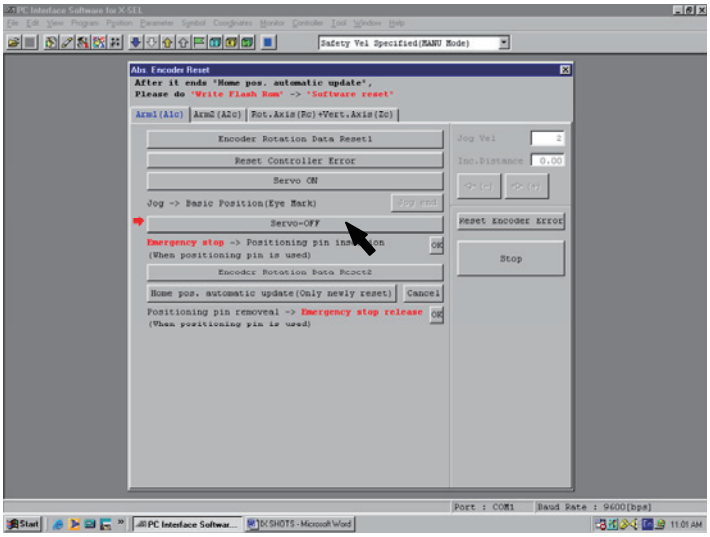

(6) Press the emergency-stop switch.

(7) Set an adjustment jig (pin) in arm 1 or 2 to fix the arm at the reference position.
- Set the jig after confirming that the emergency-stop switch is pressed.
- Set the jig after adjusting the arm to the reference position, using the positioning mark label as a guide.
- Arm 1 has a cover (not arm 2), which is fixed with setscrews. Remove the setscrews and detach the cover before setting the jig.
- It is recommended that an adjustment jig be used to perform an absolute reset. With arm 1 or 2, however, rotation data can be reset as long as a positioning accuracy of "center of positioning mark label ±1 graduation" is ensured.

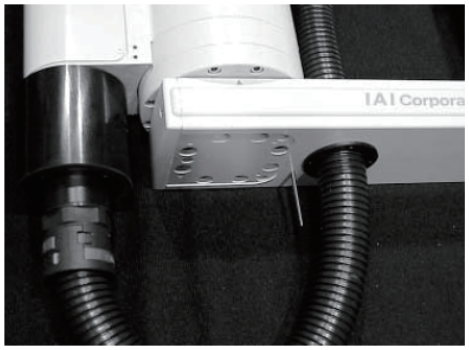

Arm 1

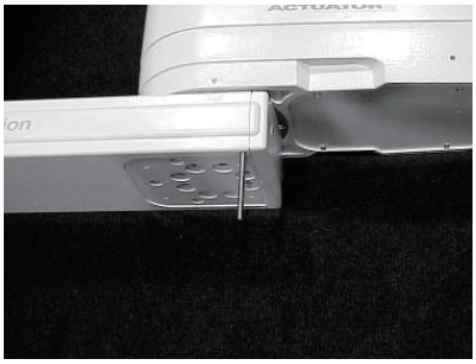

Arm 2

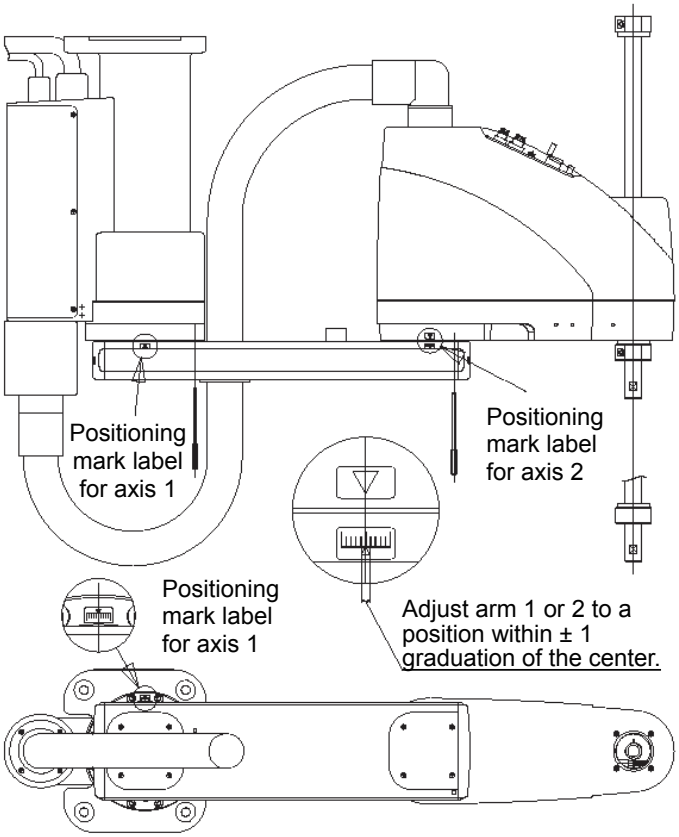

Reference position drawing

Warning

- Always press the emergency-stop switch before setting an adjustment jig. Failure to do so may cause the robot to malfunction and result in a serious accident.

(8) Click the “OK” button.

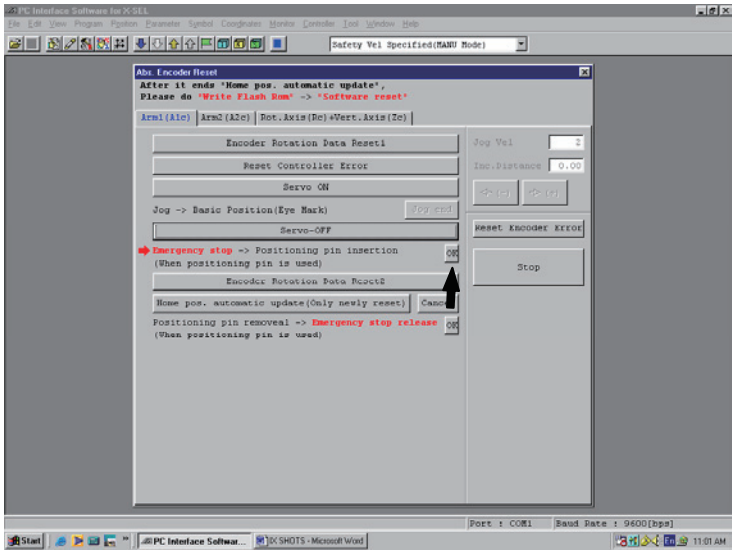

(9) Click the “Encoder Rotation Data Reset2” button.

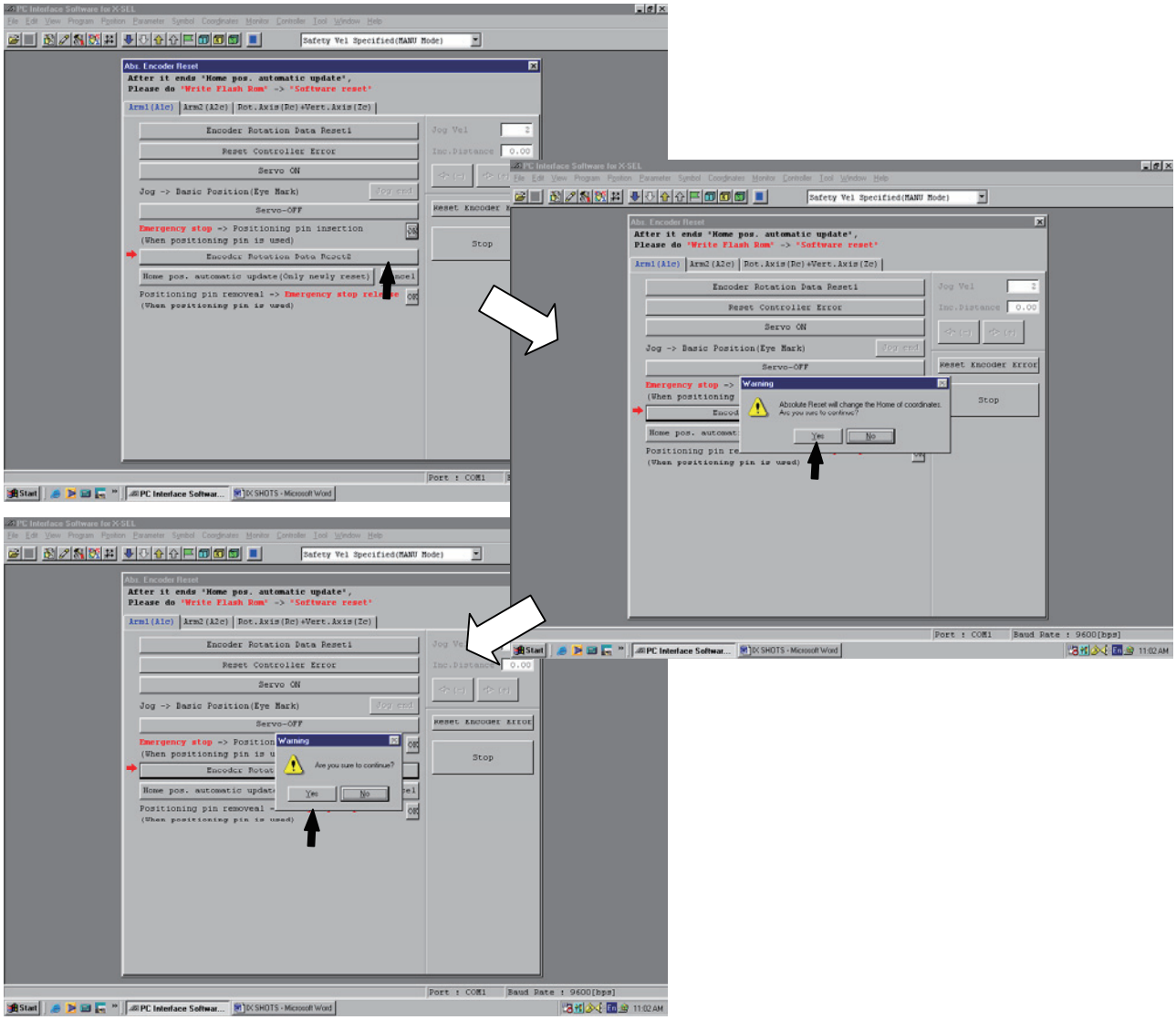

(10) Remove the adjustment jig.
- If you are working on arm 1, install the cover and secure it with the setscrews (not required for arm 2).

(11) Release the emergency-stop switch.

(12) Click the “OK” button.

- An arrow is shown next to the “Home pos. automatic update” button. Do not set this item. (In particular, be sure this item is not set when performing an absolute reset without using a jig).
- If the home position is updated automatically when a reset is performed without using an adjustment jig, the home position will become offset.
- If the home position has been updated by mistake, perform an absolute reset again using an adjustment jig. (This time, end the procedure before home position automatic update).
- Always click the “OK” button after removing the jig and releasing the emergency-stop switch.

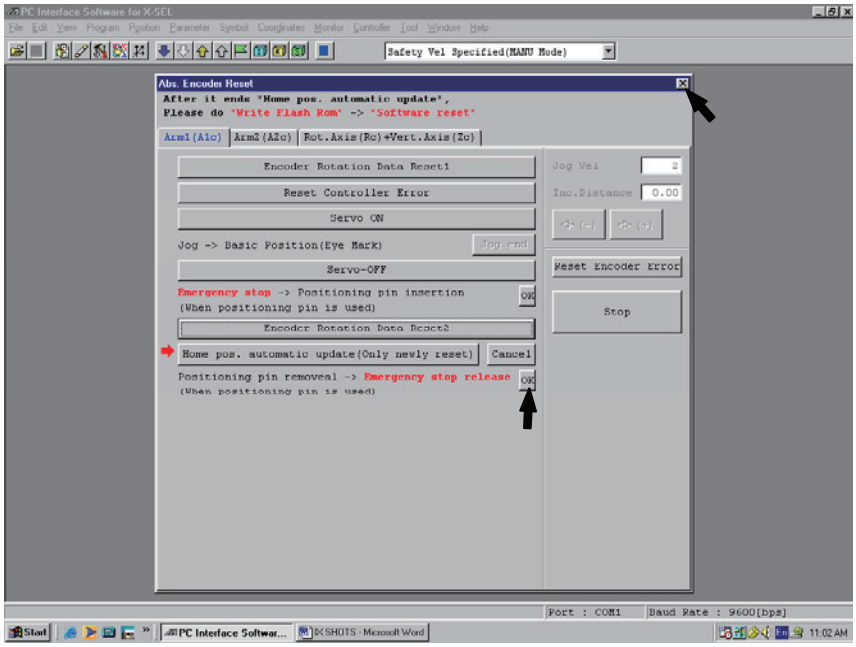

(13) Click “X” in the top right-hand corner to exit the absolute reset window.
- Once the absolute reset is complete, be sure to reset the controller.

Caution

- Be careful not to perform a reset using an incorrect sequence, since it may cause the arm position to become offset.
- When home position automatic update has been performed, be sure to write the flash ROM.

6.4.4 Absolute Reset Procedure for the Rotational Axis + Vertical Axis

(1) Click “Encoder Rotation Data Reset1” button.

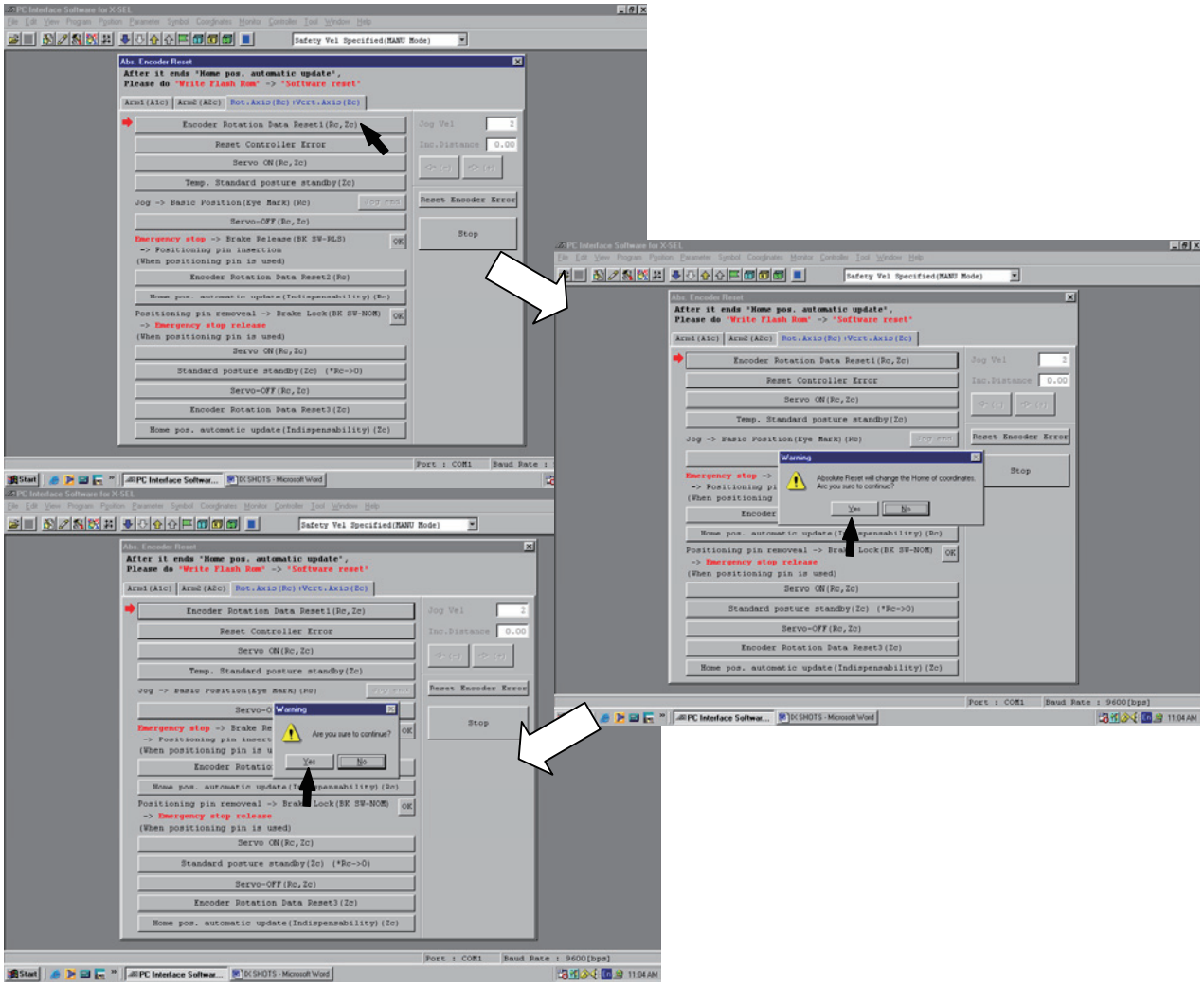

(2) Click the “Reset Controller Error” button.

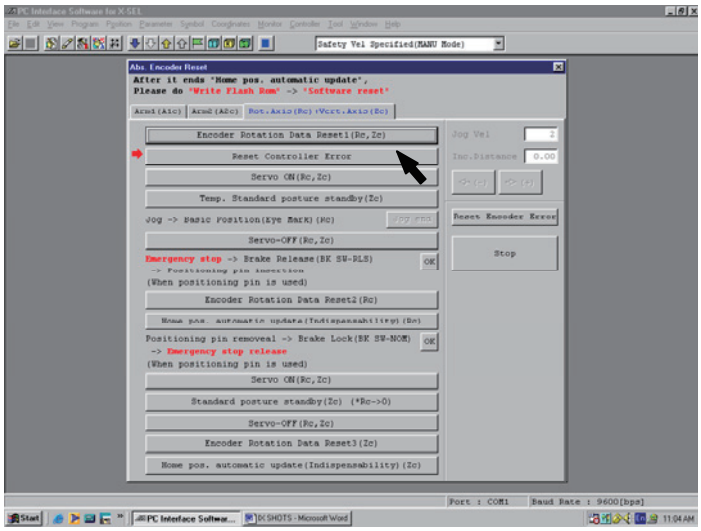

(3) Click the “Servo ON” button.

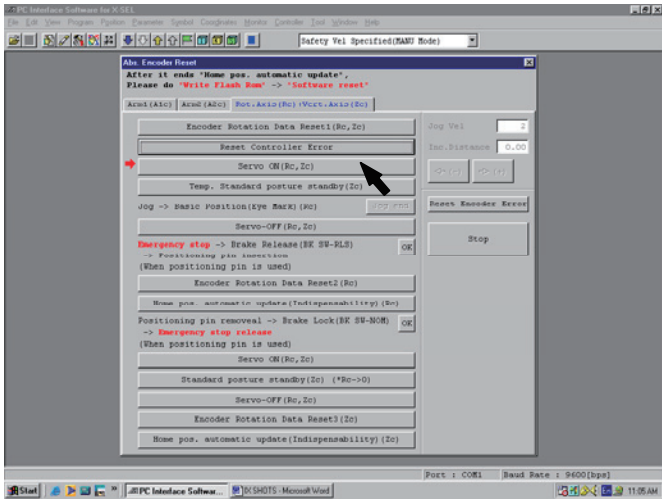

(4) Click the “Temp. Standard posture standby” button.

- The vertical axis returns to its home position. Exercise caution so as not to be injured by the axis during movement.

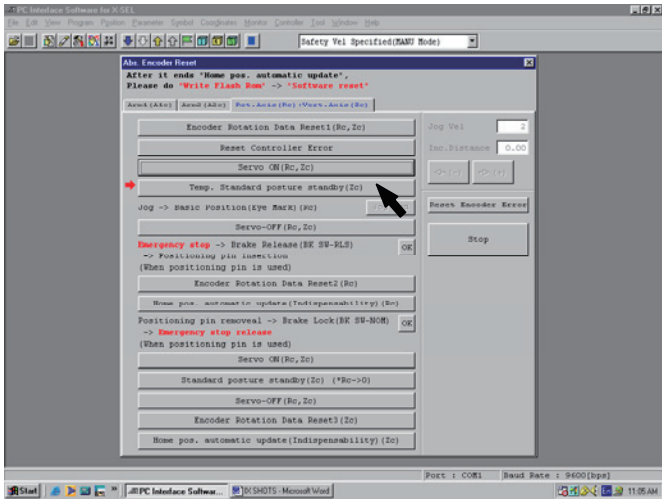

(5) Jog the rotational axis to the reference position (see reference position drawing in step 8), and click the “Jog end” button.

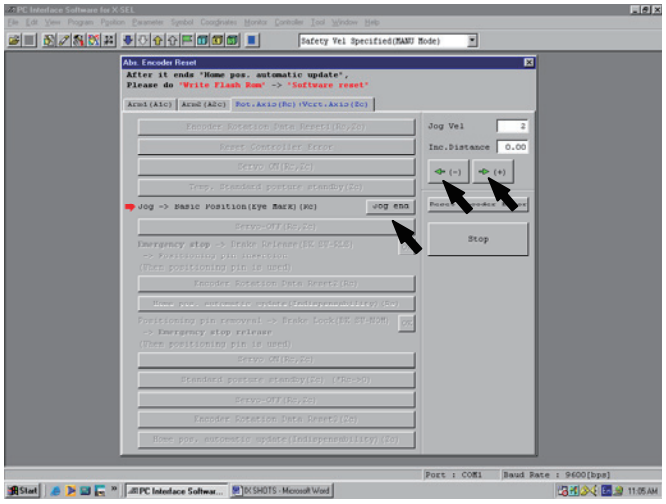

(6) Click the “Servo-OFF” button.

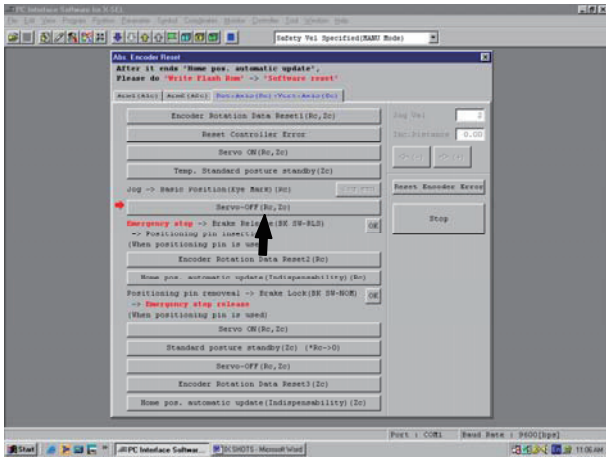

(7) Press the emergency-stop switch.

(8) Affix the rotational axis at the reference position by setting the plate and pin of the adjustment jig as illustrated below.

- Set the jig after confirming that the emergency-stop switch is pressed.
- Set the jig after adjusting the rotational axis to the reference position, using the positioning mark label as a guide.
- The top face of the stopper should roughly align with the bottom face of arm 2.

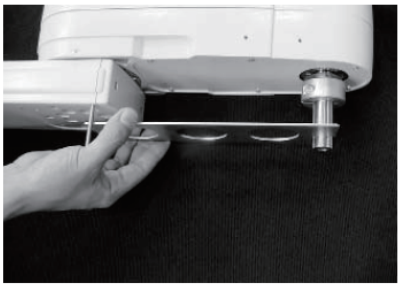

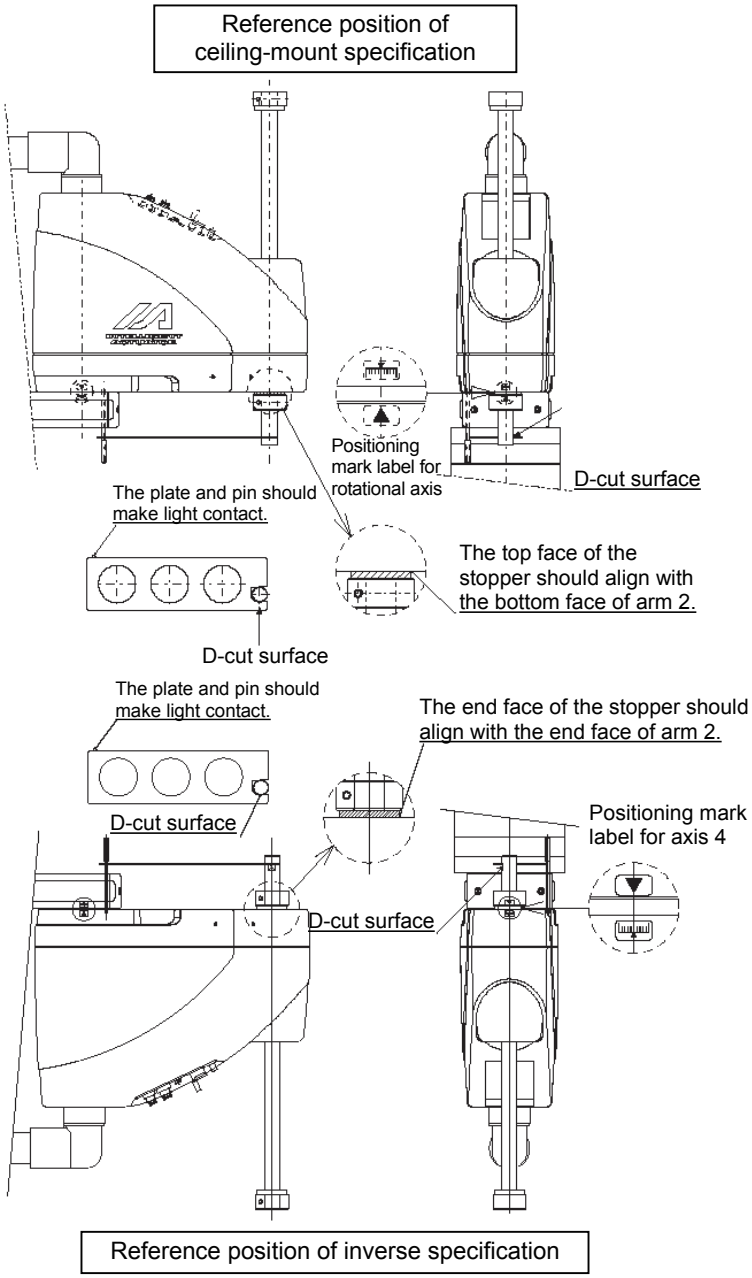

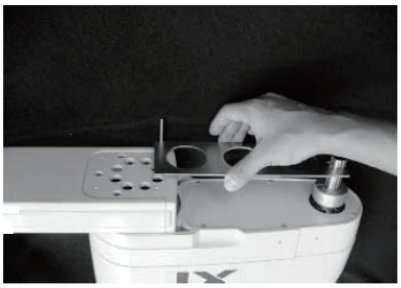

Warning

- Always press the emergency-stop switch before setting an adjustment jig. Failure to do so may cause the robot to malfunction and result in a serious accident.
- Pay attention to the orientation of the D-cut surface of the plate jig.

(9) Click the “OK” button.

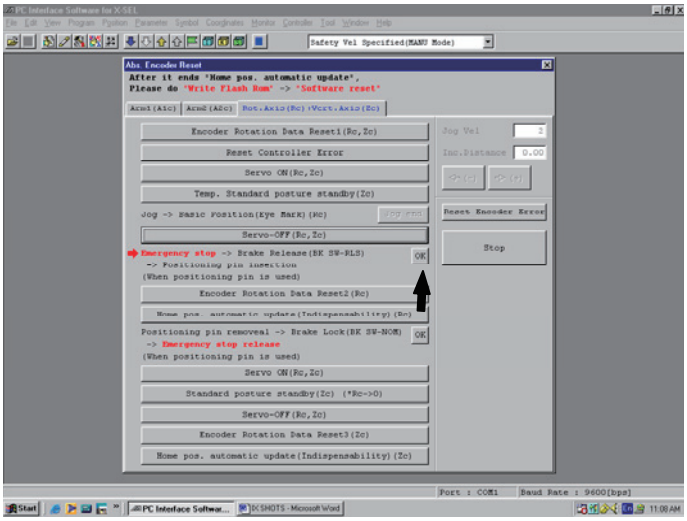

(10) Click the “Encoder Rotation Data Reset2” button.

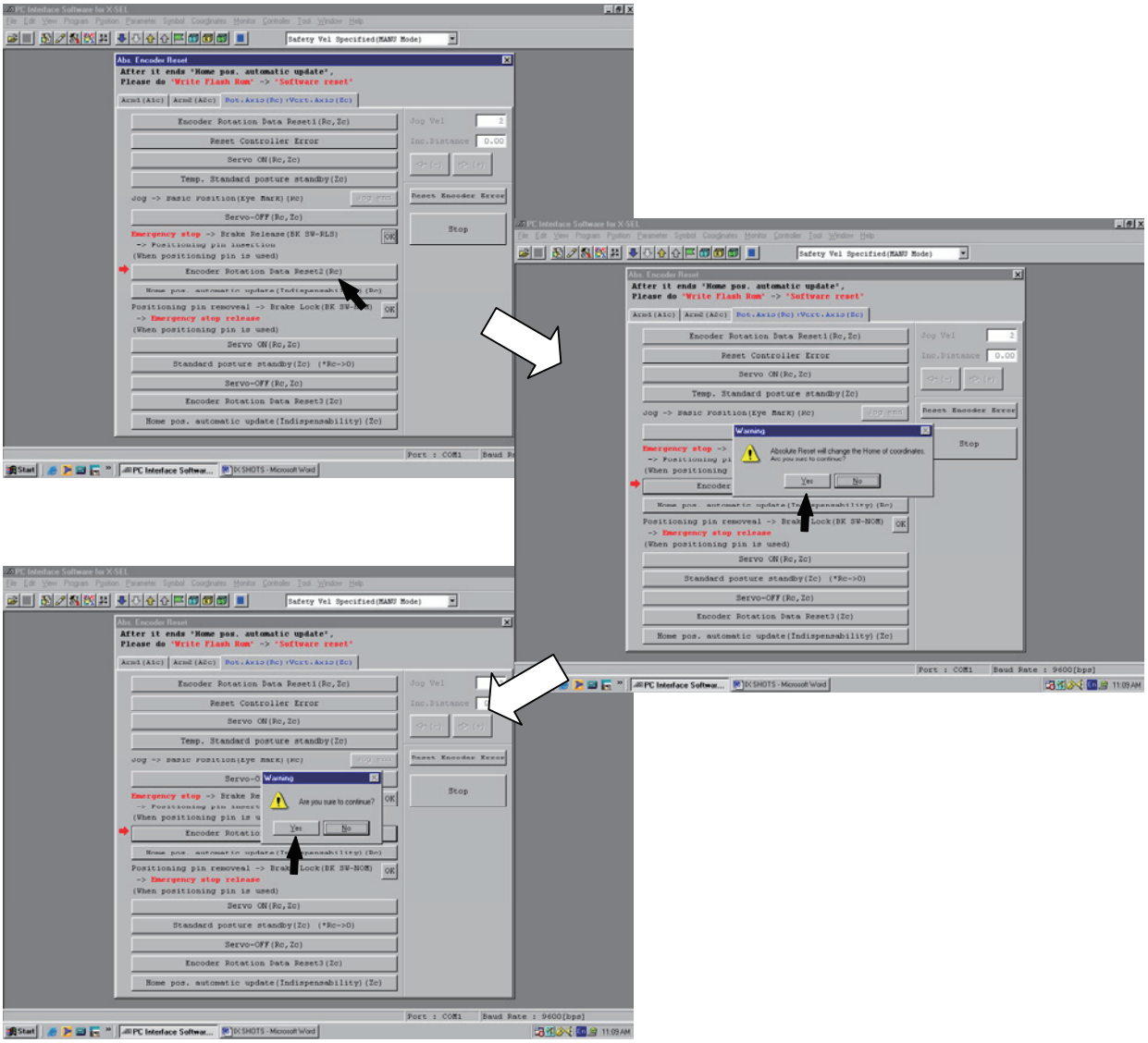

(11) Click the “Home pos. automatic update” button.

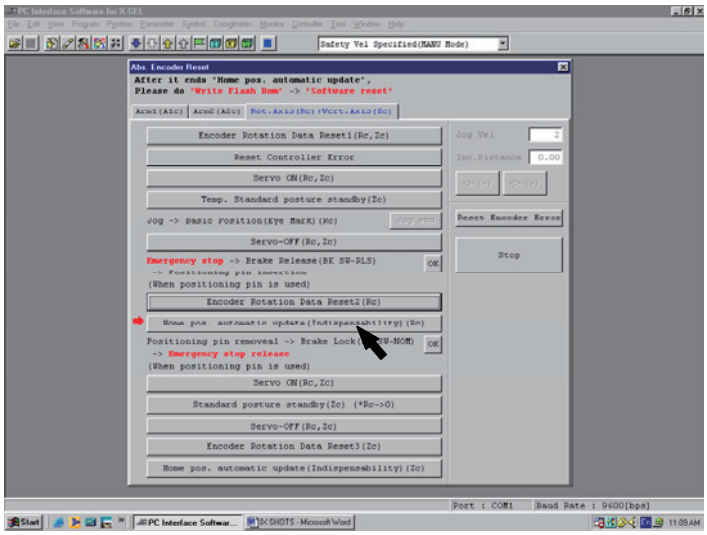

(12) Remove the adjustment jig.

(13) Release the emergency-stop switch.

(14) Click the “OK” button.

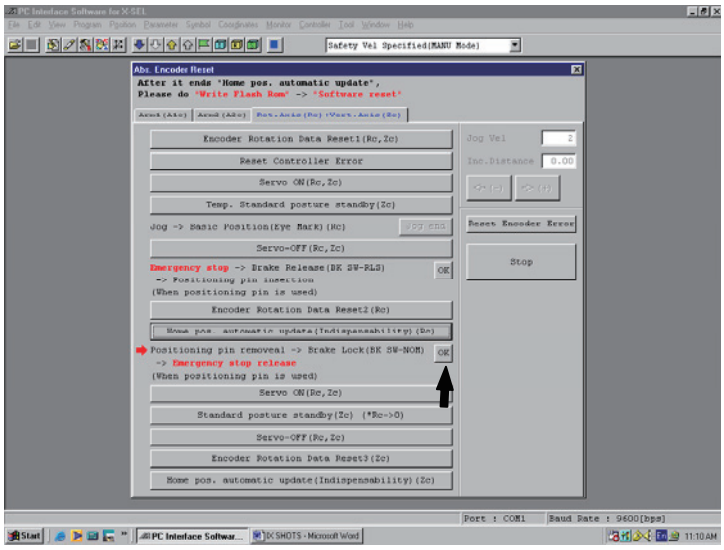

(15) Click the “Servo ON” button.

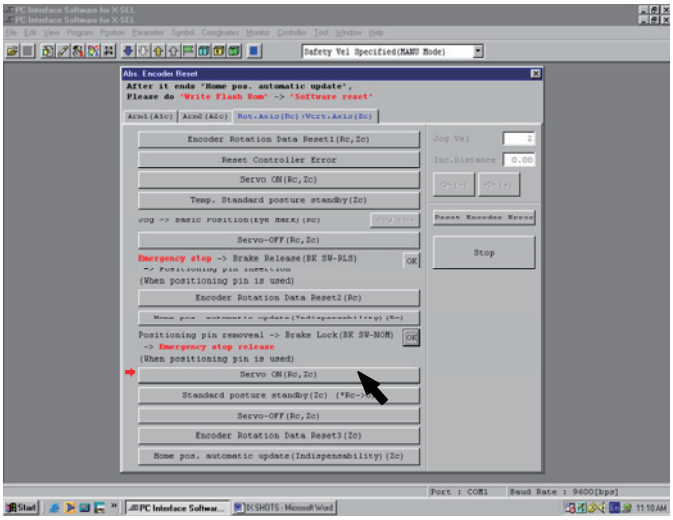

(16) Click the “Standard posture standby” button.

- The vertical axis returns to its home position. Exercise caution so as not to be injured by the axis during movement.

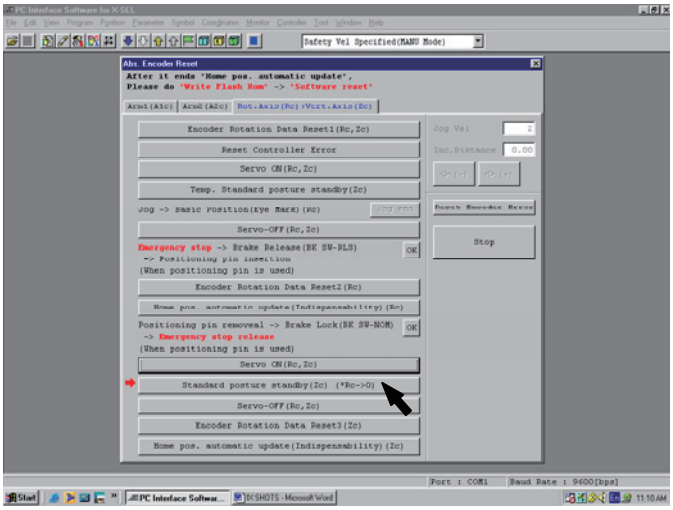

(17) Click the “Servo-OFF” button.

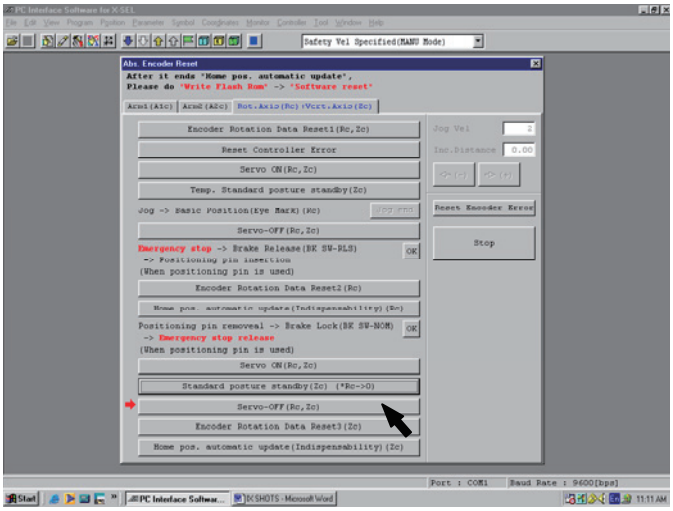

(18) Click the “Encoder Rotation Data Reset3” button.

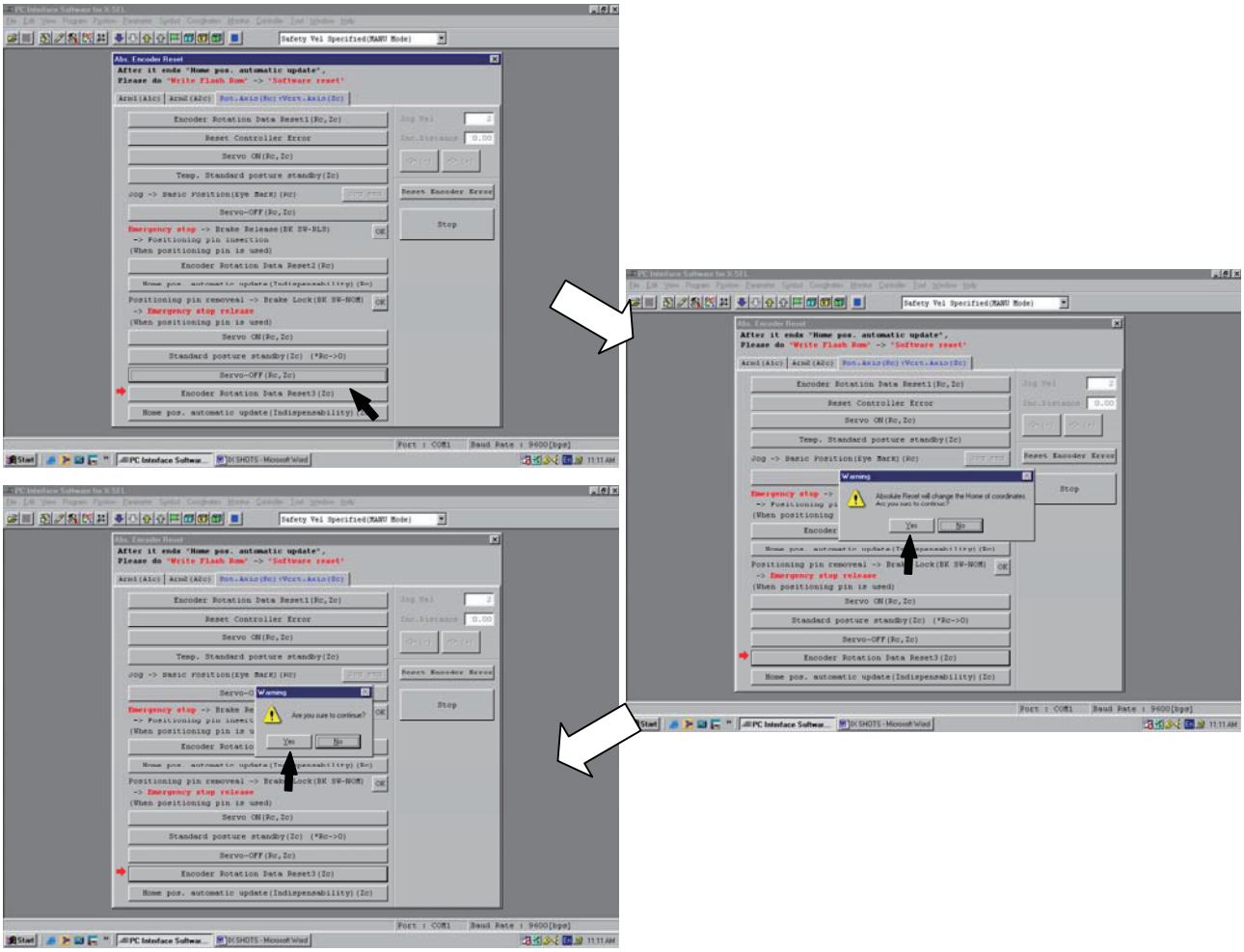

(19) Click the “Home pos. automatic update” button, and then click “X” in the top right-hand corner to exit the absolute reset window.

- Once the absolute reset is complete, be sure to write the flash ROM and reset the controller.

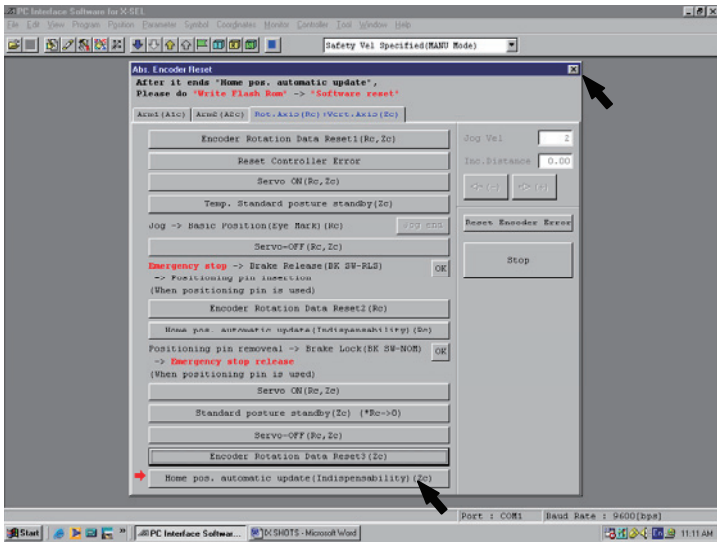

6.4.5 Writing the Flash ROM

(1) Following an absolute reset of the rotational axis and vertical axis, the following screen opens when the absolute reset window is closed. Click the “Yes” button.

- Clicking “Yes” writes the information in the flash ROM.
- The flash ROM must also be written when home position automatic update has been performed for arm 1 or 2.

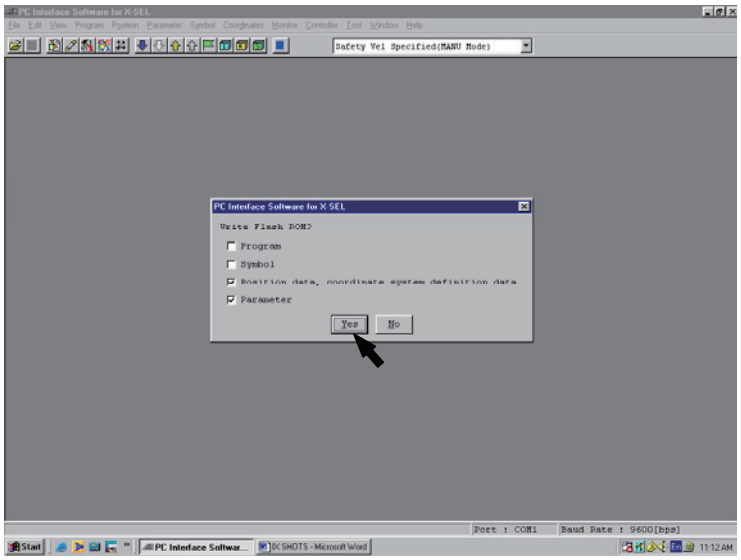

(2) When the writing of flash ROM is complete, the following screen is displayed. Click the “Yes” button.

- The controller is restarted and the software is reset.

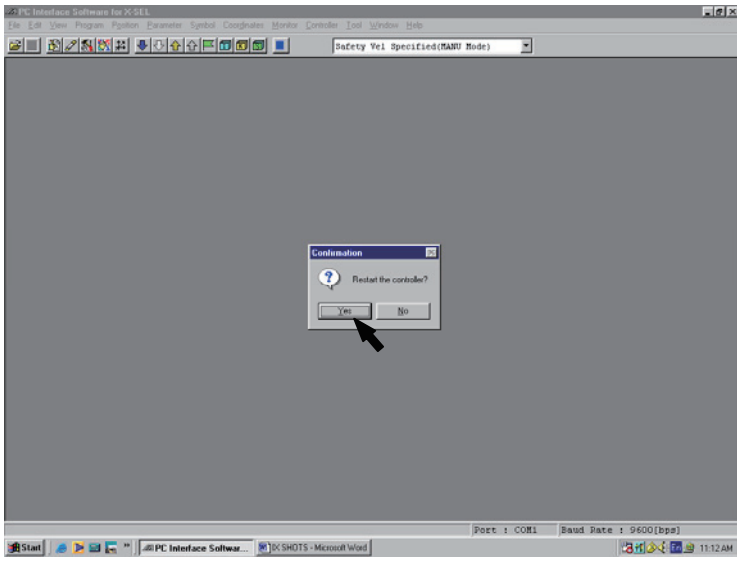

6.4.6 Resetting the Controller

(1) Select “Software Reset” from the Controller menu on the tool bar.

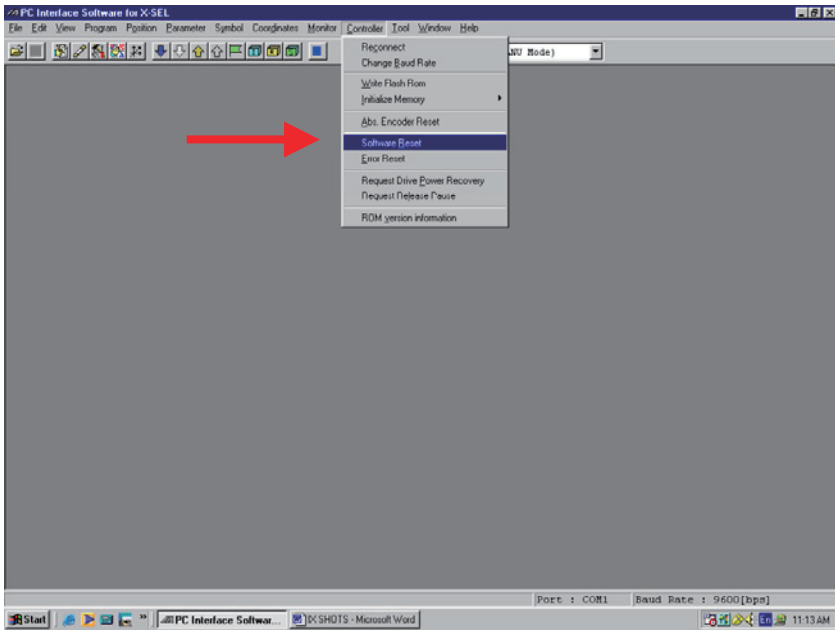

(2) Click the “Yes” button. The controller is reset and restarted.

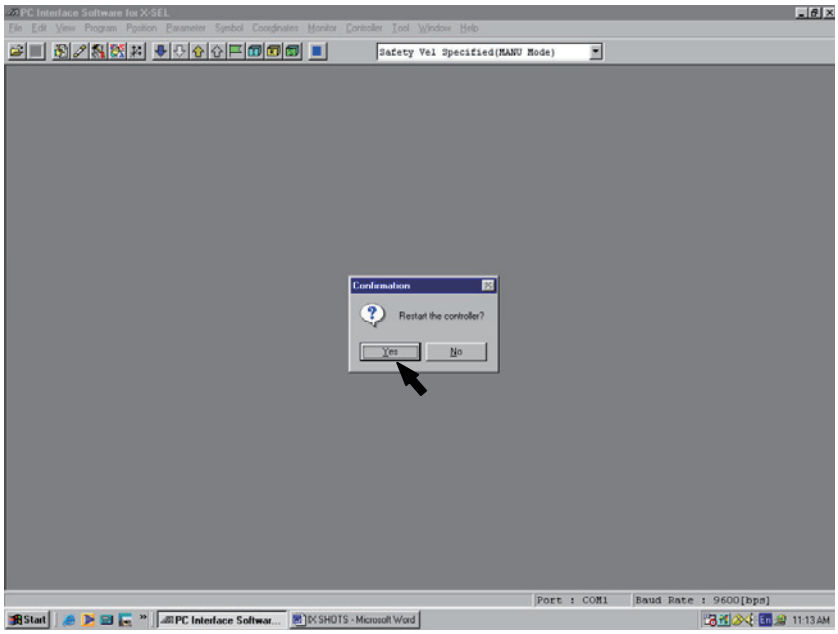

7 Specifications

7.1 Horizontal Articulated Robot Specifications

IX-HNN-50□□ (Arm Length 500, Ceiling-mount Specification)

Item			Specifications
Type			IX-HNN50□□-**L
Degree of freedom			Four degrees of freedom
Overall arm length		mm	500
Arm 1 length		mm	250
Arm 2 length		mm	250
Drive method	Axis 1 (arm 1)		AC servo motor + Speed reducer
	Axis 2 (arm 2)		AC servo motor + Speed reducer
	Axis 3 (vertical axis)		AC servo motor with brake + Belt + Ball-screw spline
	Axis 4 (rotational axis)		AC servo motor with brake + Speed reducer + Belt + Spline
Motor capacity	Axis 1 (arm 1)	W	400
	Axis 2 (arm 2)	W	200
	Axis 3 (vertical axis)	W	200
	Axis 4 (rotational axis)	W	100
Movement range	Axis 1 (arm 1)	degree	±120
	Axis 2 (arm 2)	degree	±135
	Axis 3 (vertical axis) (*1)	mm	200
	Axis 4 (rotational axis)	degree	±360
Maximum operating speed (*2)	Axis 1 + Axis 2 (maximum composite speed)	mm/sec	6283
	Axis 3 (vertical axis)	mm/sec	1393
	Axis 4 (rotational axis)	degree/sec	1200
Positioning repeatability (*3)	Axis 1 + Axis 2	mm	±0.010
	Axis 3 (vertical axis)	mm	±0.010
	Axis 4 (rotational axis)	degree	±0.005
Cycle time (*4)			0.44
Load capacity	Rated	kg	2
	Maximum	kg	10
Push-in thrust of axis 3 (vertical axis)	Dynamic (*8)	N (kgf)	152 (15.5)
	Static (*9)	N (kgf)	108 (11.0)
Permissible load on axis 4	Permissible moment of inertia (*5)	$kg \cdot m^2$	0.06
	Permissible torque	N·m (kgf·cm)	3.3 (33.6)
Permissible tool diameter (*6)		mm	ϕ100
Origin detection			Absolute
User wiring			D-sub 25-pin connector with 25-core AWG26 shielded cable (socket)
Alarm indicator (*7)			One small, red LED indicator (rated voltage: 24 V)
User piping			Two air tubes (outer diameter: ϕ6, inner diameter: ϕ4) (normal service pressure: 0.8 MPa) Two air tubes (outer diameter: ϕ4, inner diameter: ϕ2.5) (normal service pressure: 0.8 MPa)

Item			Specifications
Operating environment	Ambient temperature/humidity		Temperature: 0 to 40°C, humidity: 20 to 85%RH or less (non-condensing)
	Altitude	m	1,000 or less
Noise		dB	73
Robot weight		kg	30.5
Brake power source for main unit		W	24V DC ±10% 20W
Controller	Power supply		230 V 50/60 Hz 8 A
	Allowable supply voltage fluctuation	%	±10
	Overvoltage category (IEC60664-1)		Category III
	Pollution degree (IEC60664-1)		Pollution degree 3

*1 To move the robot horizontally at high speed, perform teaching so that the vertical axis stays as close to the top position as possible. (Fig. 1)
To operate the robot with its vertical axis at the bottom position, the speed and acceleration must be reduced as appropriate. (Fig. 2)
*2 Assuming PTP instruction operation.
*3 Measured at a constant ambient temperature of 20°C.
*4 Measured when the robot is operated at the maximum speed, carrying a rated load of 2 kg.
*5 The permissible moment of inertia converted to a value at the rotational center of axis 4. The offset from the rotational center of axis 4 to the tool's center of gravity is assumed to be 50 mm or less. (Fig. 3)
If the tool's center of gravity is further away from the rotational center of axis 4, the speed and acceleration must be reduced as appropriate.
*6 If the tool exceeds the permissible diameter, it will contact the robot inside the robot's range of movement. (Fig. 4)
*7 To enable the alarm LED indicator, the user must provide a circuit that supplies 24 VDC to the LED terminal in the user connector in response to the controller I/O output signal, etc.
*8 A force of up to three times the dynamic push-in thrust may be applied at any given moment.
*9 The static thrust refers to thrust generated within the robot's range of operation based on a PAPR command.

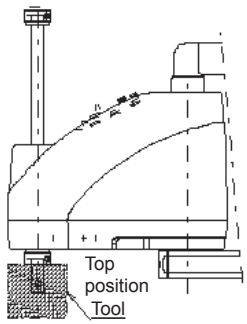

(Fig. 1)

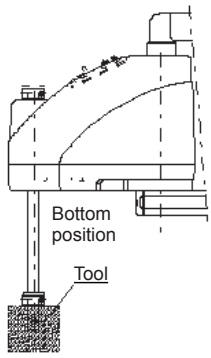

(Fig. 2)

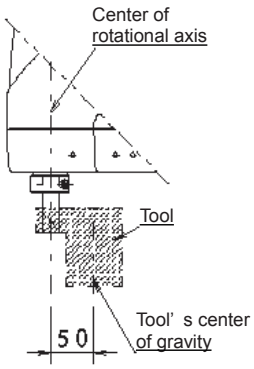

(Fig. 3)

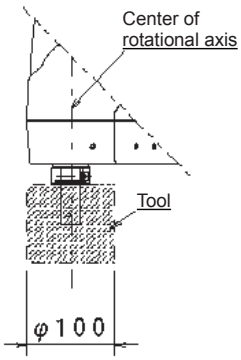

(Fig. 4)

Reference design standards: Annex I to Machine Directives, EN292-1, EN292-2, EN1050, EN60204-1, EN775

IX-INN50□□ (Arm Length 500, Inverse Specification)

Item			Specifications
Type			IX-INN50□□-**L
Degree of freedom			Four degrees of freedom
Overall arm length		mm	500
Arm 1 length		mm	250
Arm 2 length		mm	250
Drive method	Axis 1 (arm 1)		AC servo motor + Speed reducer
	Axis 2 (arm 2)		AC servo motor + Speed reducer
	Axis 3 (vertical axis)		AC servo motor with brake + Belt + Ball-screw spline
	Axis 4 (rotational axis)		AC servo motor with brake + Speed reducer + Belt + Spline
Motor capacity	Axis 1 (arm 1)	W	400
	Axis 2 (arm 2)	W	200
	Axis 3 (vertical axis)	W	200
	Axis 4 (rotational axis)	W	100
Movement range	Axis 1 (arm 1)	degree	±120
	Axis 2 (arm 2)	degree	±135
	Axis 3 (vertical axis) (*1)	mm	200
	Axis 4 (rotational axis)	degree	±360
Maximum operating speed (*2)	Axis 1 + Axis 2 (maximum composite speed)	mm/sec	6283
	Axis 3 (vertical axis)	mm/sec	1393
	Axis 4 (rotational axis)	degree/sec	1200
Positioning repeatability (*3)	Axis 1 + Axis 2	mm	±0.010
	Axis 3 (vertical axis)	mm	±0.010
	Axis 4 (rotational axis)	degree	±0.005
Cycle time (*4)			0.44
Load capacity	Rated	kg	2
	Maximum	kg	10
Push-in thrust of axis 3 (vertical axis)	Dynamic (*8)	N (kgf)	152 (15.5)
	Static (*9)	N (kgf)	108 (11.0)
Permissible load on axis 4	Permissible moment of inertia (*5)	kg·m^2	0.06
	Permissible torque	N·m (kgf·cm)	3.3 (33.6)
Permissible tool diameter (*6)		mm	ϕ100
Origin detection			Absolute
User wiring			D-sub 25-pin connector with 25-core AWG26 shielded cable (socket)
Alarm indicator (*7)			One small, red LED indicator (rated voltage: 24 V)
User piping			Two air tubes (outer diameter: ϕ6, inner diameter: ϕ4) (normal service pressure: 0.8 MPa) Two air tubes (outer diameter: ϕ4, inner diameter: ϕ2.5) (normal service pressure: 0.8 MPa)

Item			Specifications
Operating environment	Ambient temperature/humidity		Temperature: 0 to 40°C, humidity: 20 to 85%RH or less (non-condensing)
	Altitude	m	1,000 or less
Noise		dB	73
Robot weight		kg	30.5
Brake power source for main unit		W	24V DC ±10% 20W
Controller	Power supply		230 V 50/60 Hz 8 A
	Allowable supply voltage fluctuation	%	±10
	Overvoltage category (IEC60664-1)		Category III
	Pollution degree (IEC60664-1)		Pollution degree 3

*1 To move the robot horizontally at high speed, perform teaching so that the vertical axis stays as close to the bottom position as possible. (Fig. 1)
To operate the robot with its vertical axis at the bottom position, the speed and acceleration must be reduced as appropriate. (Fig. 2)
*2 Assuming PTP instruction operation.
*3 Measured at a constant ambient temperature of 20°C.
*4 Measured when the robot is operated at the maximum speed, carrying a rated load of 2 kg.
*5 The permissible moment of inertia converted to a value at the rotational center of axis 4. The offset from the rotational center of axis 4 to the tool's center of gravity is assumed to be 50 mm or less. (Fig. 3)
If the tool's center of gravity is further away from the rotational center of axis 4, the speed and acceleration must be reduced as appropriate.
*6 If the tool exceeds the permissible diameter, it will contact the robot inside the robot's range of movement. (Fig. 4)
*7 To enable the alarm LED indicator, the user must provide a circuit that supplies 24 VDC to the LED terminal in the user connector in response to the controller I/O output signal, etc.
*8 A force of up to three times the dynamic push-in thrust may be applied at any given moment.
*9 The static thrust refers to thrust generated within the robot's range of operation based on a PAPR command.

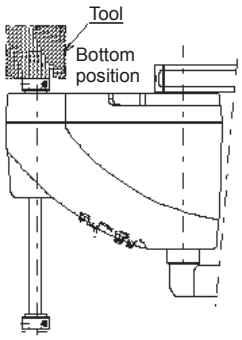

(Fig. 1)

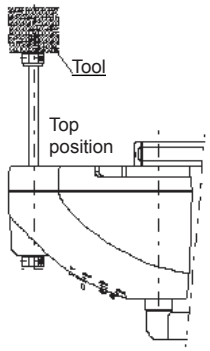

(Fig. 2)

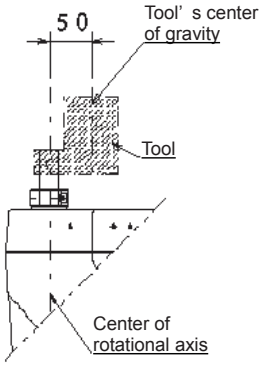

(Fig. 3)

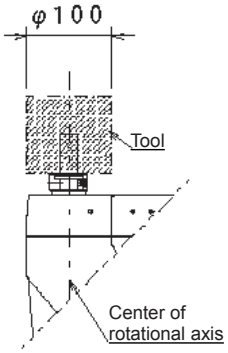

(Fig. 4)

Reference design standards: Annex I to Machine Directives, EN292-1, EN292-2, EN1050, EN60204-1, EN775

IX-HNN60□□ (Arm Length 600, Ceiling-mount Specification)

Item			Specifications
Type			IX-HNN60□□-**L
Degree of freedom			Four degrees of freedom
Overall arm length		mm	600
Arm 1 length		mm	350
Arm 2 length		mm	250
Drive method	Axis 1 (arm 1)		AC servo motor + Speed reducer
	Axis 2 (arm 2)		AC servo motor + Speed reducer
	Axis 3 (vertical axis)		AC servo motor with brake + Belt + Ball-screw spline
	Axis 4 (rotational axis)		AC servo motor with brake + Speed reducer + Belt + Spline
Motor capacity	Axis 1 (arm 1)	W	400
	Axis 2 (arm 2)	W	200
	Axis 3 (vertical axis)	W	200
	Axis 4 (rotational axis)	W	100
Movement range	Axis 1 (arm 1)	degree	±120
	Axis 2 (arm 2)	degree	±145
	Axis 3 (vertical axis) (*1)	mm	200 (Optional: 300)
	Axis 4 (rotational axis)	degree	±360
Maximum operating speed (*2)	Axis 1 + Axis 2 (maximum composite speed)	mm/sec	7121
	Axis 3 (vertical axis)	mm/sec	1393
	Axis 4 (rotational axis)	degree/sec	1200
Positioning repeatability (*3)	Axis 1 + Axis 2	mm	±0.010
	Axis 3 (vertical axis)	mm	±0.010
	Axis 4 (rotational axis)	degree	±0.005
Cycle time (*4)			0.52
Load capacity	Rated	kg	2
	Maximum	kg	10
Push-in thrust of axis 3 (vertical axis)	Dynamic (*8)	N (kgf)	152 (15.5)
	Static (*9)	N (kgf)	108 (11.0)
Permissible load on axis 4	Permissible moment of inertia (*5)	$kg \cdot m^2$	0.06
	Permissible torque	N·m (kgf·cm)	3.3 (33.6)
Permissible tool diameter (*6)		mm	ϕ100
Origin detection			Absolute
User wiring			D-sub 25-pin connector with 25-core AWG26 shielded cable (socket)
Alarm indicator (*7)			One small, red LED indicator (rated voltage: 24 V)
User piping			Two air tubes (outer diameter: ϕ6, inner diameter: ϕ4) (normal service pressure: 0.8 MPa) Two air tubes (outer diameter: ϕ4, inner diameter: ϕ2.5) (normal service pressure: 0.8 MPa)

Item			Specifications
Operating environment	Ambient temperature/humidity		Temperature: 0 to 40°C, humidity: 20 to 85%RH or less (non-condensing)
	Altitude	m	1,000 or less
Noise		dB	73
Robot weight		kg	31.5
Brake power source for main unit		W	24V DC ±10% 20W
Controller	Power supply		230 V 50/60 Hz 8 A
	Allowable supply voltage fluctuation	%	±10
	Overvoltage category (IEC60664-1)		Category III
	Pollution degree (IEC60664-1)		Pollution degree 3

*1 To move the robot horizontally at high speed, perform teaching so that the vertical axis stays as close to the top position as possible. (Fig. 1)
To operate the robot with its vertical axis at the bottom position, the speed and acceleration must be reduced as appropriate. (Fig. 2)
*2 Assuming PTP instruction operation.
*3 Measured at a constant ambient temperature of 20°C.
*4 Measured when the robot is operated at the maximum speed, carrying a rated load of 2 kg.
*5 The permissible moment of inertia converted to a value at the rotational center of axis 4. The offset from the rotational center of axis 4 to the tool's center of gravity is assumed to be 50 mm or less. (Fig. 3)
If the tool's center of gravity is further away from the rotational center of axis 4, the speed and acceleration must be reduced as appropriate.
*6 If the tool exceeds the permissible diameter, it will contact the robot inside the robot's range of movement. (Fig. 4)
*7 To enable the alarm LED indicator, the user must provide a circuit that supplies 24 VDC to the LED terminal in the user connector in response to the controller I/O output signal, etc.
*8 A force of up to three times the dynamic push-in thrust may be applied at any given moment.
*9 The static thrust refers to thrust generated within the robot's range of operation based on a PAPR command.

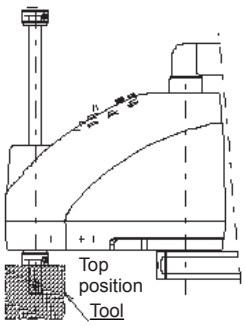

(Fig. 1)

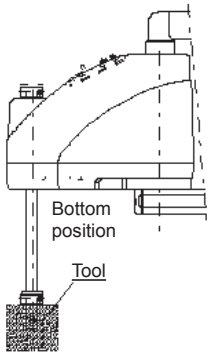

(Fig. 2)

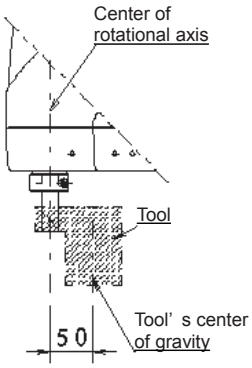

(Fig. 3)

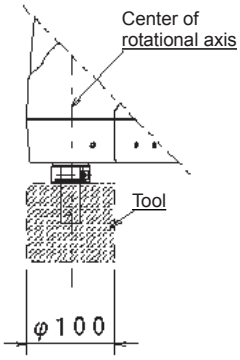

(Fig. 4)

Reference design standards: Annex I to Machine Directives, EN292-1, EN292-2, EN1050, EN60204-1, EN775

IX-INN60□□ (Arm Length 600, Inverse Specification)

Item			Specifications
Type			IX-INN60□□-**L
Degree of freedom			Four degrees of freedom
Overall arm length		mm	600
Arm 1 length		mm	350
Arm 2 length		mm	250
Drive method	Axis 1 (arm 1)		AC servo motor + Speed reducer
	Axis 2 (arm 2)		AC servo motor + Speed reducer
	Axis 3 (vertical axis)		AC servo motor with brake + Belt + Ball-screw spline
	Axis 4 (rotational axis)		AC servo motor with brake + Speed reducer + Belt + Spline
Motor capacity	Axis 1 (arm 1)	W	400
	Axis 2 (arm 2)	W	200
	Axis 3 (vertical axis)	W	200
	Axis 4 (rotational axis)	W	100
Movement range	Axis 1 (arm 1)	degree	±120
	Axis 2 (arm 2)	degree	±145
	Axis 3 (vertical axis) (*1)	mm	200 (Optional: 300)
	Axis 4 (rotational axis)	degree	±360
Maximum operating speed (*2)	Axis 1 + Axis 2 (maximum composite speed)	mm/sec	7121
	Axis 3 (vertical axis)	mm/sec	1393
	Axis 4 (rotational axis)	degree/sec	1200
Positioning repeatability (*3)	Axis 1 + Axis 2	mm	±0.010
	Axis 3 (vertical axis)	mm	±0.010
	Axis 4 (rotational axis)	degree	±0.005
Cycle time (*4)			0.52
Load capacity	Rated	kg	2
	Maximum	kg	10
Push-in thrust of axis 3 (vertical axis)	Dynamic (*8)	N (kgf)	152 (15.5)
	Static (*9)	N (kgf)	108 (11.0)
Permissible load on axis 4	Permissible moment of inertia (*5)	$kg \cdot m^2$	0.06
	Permissible torque	N·m (kgf·cm)	3.3 (33.6)
Permissible tool diameter (*6)		mm	ϕ100
Origin detection			Absolute
User wiring			D-sub 25-pin connector with 25-core AWG26 shielded cable (socket)
Alarm indicator (*7)			One small, red LED indicator (rated voltage: 24 V)
User piping			Two air tubes (outer diameter: ϕ6, inner diameter: ϕ4) (normal service pressure: 0.8 MPa) Two air tubes (outer diameter: ϕ4, inner diameter: ϕ2.5) (normal service pressure: 0.8 MPa)

Item			Specifications
Operating environment	Ambient temperature/humidity		Temperature: 0 to 40°C, humidity: 20 to 85%RH or less (non-condensing)
	Altitude	m	1,000 or less
Noise		dB	73
Robot weight		kg	31.5
Brake power source for main unit		W	24V DC ±10% 20W
Controller	Power supply		230 V 50/60 Hz 8 A
	Allowable supply voltage fluctuation	%	±10
	Overvoltage category (IEC60664-1)		Category III
	Pollution degree (IEC60664-1)		Pollution degree 3

*1 To move the robot horizontally at high speed, perform teaching so that the vertical axis stays as close to the bottom position as possible. (Fig. 1)
To operate the robot with its vertical axis at the bottom position, the speed and acceleration must be reduced as appropriate. (Fig. 2)
*2 Assuming PTP instruction operation.
*3 Measured at a constant ambient temperature of 20°C.
*4 Measured when the robot is operated at the maximum speed, carrying a rated load of 2 kg.
*5 The permissible moment of inertia converted to a value at the rotational center of axis 4. The offset from the rotational center of axis 4 to the tool's center of gravity is assumed to be 50 mm or less. (Fig. 3)
If the tool's center of gravity is further away from the rotational center of axis 4, the speed and acceleration must be reduced as appropriate.
*6 If the tool exceeds the permissible diameter, it will contact the robot inside the robot's range of movement. (Fig. 4)
*7 To enable the alarm LED indicator, the user must provide a circuit that supplies 24 VDC to the LED terminal in the user connector in response to the controller I/O output signal, etc.
*8 A force of up to three times the dynamic push-in thrust may be applied at any given moment.
*9 The static thrust refers to thrust generated within the robot's range of operation based on a PAPR command.

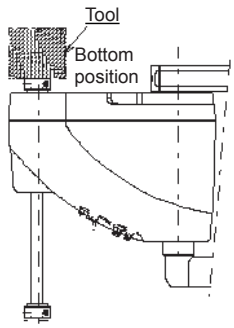

(Fig. 1)

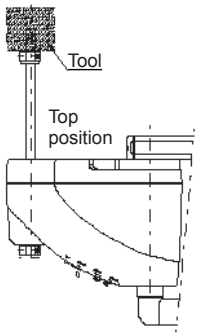

(Fig. 2)

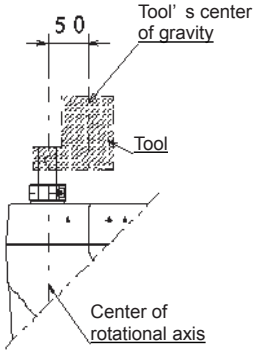

(Fig. 3)

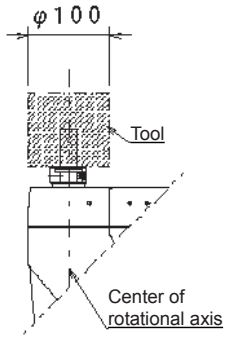

(Fig. 4)

Reference design standards: Annex I to Machine Directives, EN292-1, EN292-2, EN1050, EN60204-1, EN775

IX-HNN70□□ (Arm Length 700, Ceiling-mount Specification)

Item			Specifications
Type			IX-HNN70□□-**L-T1
Degree of freedom			Four degrees of freedom
Overall arm length		mm	700
Arm 1 length		mm	350
Arm 2 length		mm	350
Drive method	Axis 1 (arm 1)		AC servo motor + Speed reducer
	Axis 2 (arm 2)		AC servo motor + Speed reducer
	Axis 3 (vertical axis)		AC servo motor with brake + Belt + Ball-screw spline
	Axis 4 (rotational axis)		AC servo motor with brake + Speed reducer + Belt + Spline
Motor capacity	Axis 1 (arm 1)	W	750
	Axis 2 (arm 2)	W	400
	Axis 3 (vertical axis)	W	400
	Axis 4 (rotational axis)	W	200
Movement range	Axis 1 (arm 1)	degree	±125
	Axis 2 (arm 2)	degree	±145
	Axis 3 (vertical axis) (*1)	mm	200 (Optional: 400)
	Axis 4 (rotational axis)	degree	±360
Maximum operating speed (*2)	Axis 1 + Axis 2 (maximum composite speed)	mm/sec	6597
	Axis 3 (vertical axis)	mm/sec	1583
	Axis 4 (rotational axis)	degree/sec	1200
Positioning repeatability (*3)	Axis 1 + Axis 2	mm	±0.015
	Axis 3 (vertical axis)	mm	±0.010
	Axis 4 (rotational axis)	degree	±0.005
Cycle time (*4)			0.50
Load capacity	Rated	kg	5
	Maximum	kg	20
Push-in thrust of axis 3 (vertical axis)	Dynamic (*8)	N (kgf)	265 (27.0)
	Static (*9)	N (kgf)	188 (19.1)
Permissible load on axis 4	Permissible moment of inertia (*5)	$kg \cdot m^2$	0.1
	Permissible torque	N·m (kgf·cm)	6.7 (68.3)
Permissible tool diameter (*6)		mm	ϕ100
Origin detection			Absolute
User wiring			D-sub 25-pin connector with 25-core AWG26 shielded cable (socket)
Alarm indicator (*7)			One small, red LED indicator (rated voltage: 24 V)
User piping			Two air tubes (outer diameter: ϕ6, inner diameter: ϕ4) (normal service pressure: 0.8 MPa) Two air tubes (outer diameter: ϕ4, inner diameter: ϕ2.5) (normal service pressure: 0.8 MPa)

Item			Specifications
Operating environment	Ambient temperature/humidity		Temperature: 0 to 40°C, humidity: 20 to 85%RH or less (non-condensing)
	Altitude	m	1,000 or less
Noise		dB	74
Robot weight		kg	58
Brake power source for main unit		W	24V DC ±10% 20W
Controller	Power supply		230 V 50/60 Hz 15 A
	Allowable supply voltage fluctuation	%	±10
	Overvoltage category (IEC60664-1)		Category III
	Pollution degree (IEC60664-1)		Pollution degree 3

*1 To move the robot horizontally at high speed, perform teaching so that the vertical axis stays as close to the top position as possible. (Fig. 1)
To operate the robot with its vertical axis at the bottom position, the speed and acceleration must be reduced as appropriate. (Fig. 2)
*2 Assuming PTP instruction operation.
*3 Measured at a constant ambient temperature of 20°C.
*4 Measured when the robot is operated at the maximum speed, carrying a rated load of 5 kg.
*5 The permissible moment of inertia converted to a value at the rotational center of axis 4. The offset from the rotational center of axis 4 to the tool's center of gravity is assumed to be 50 mm or less. (Fig. 3)
If the tool's center of gravity is further away from the rotational center of axis 4, the speed and acceleration must be reduced as appropriate.
*6 If the tool exceeds the permissible diameter, it will contact the robot inside the robot's range of movement. (Fig. 4)
*7 To enable the alarm LED indicator, the user must provide a circuit that supplies 24 VDC to the LED terminal in the user connector in response to the controller I/O output signal, etc.
*8 A force of up to three times the dynamic push-in thrust may be applied at any given moment.
*9 The static thrust refers to thrust generated within the robot's range of operation based on a PAPR command.

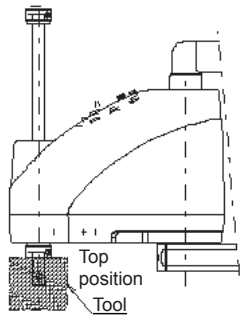

(Fig. 1)

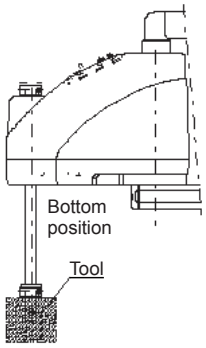

(Fig. 2)

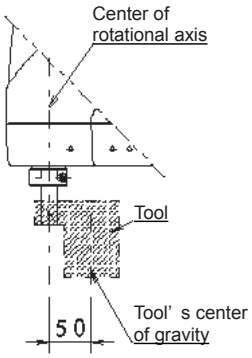

(Fig. 3)

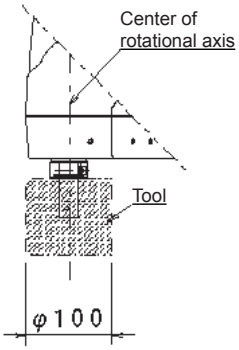

(Fig. 4)

Reference design standards: Annex I to Machine Directives, EN292-1, EN292-2, EN1050, EN60204-1, EN775

IX-INN70□□ (Arm Length 700, Inverse Specification)

Item			Specifications
Type			IX-INN70□□-**L-T1
Degree of freedom			Four degrees of freedom
Overall arm length		mm	700
Arm 1 length		mm	350
Arm 2 length		mm	350
Drive method	Axis 1 (arm 1)		AC servo motor + Speed reducer
	Axis 2 (arm 2)		AC servo motor + Speed reducer
	Axis 3 (vertical axis)		AC servo motor with brake + Belt + Ball-screw spline
	Axis 4 (rotational axis)		AC servo motor with brake + Speed reducer + Belt + Spline
Motor capacity	Axis 1 (arm 1)	W	750
	Axis 2 (arm 2)	W	400
	Axis 3 (vertical axis)	W	400
	Axis 4 (rotational axis)	W	200
Movement range	Axis 1 (arm 1)	degree	±125
	Axis 2 (arm 2)	degree	±140
	Axis 3 (vertical axis) (*1)	mm	200 (Optional: 400)
	Axis 4 (rotational axis)	degree	±360
Maximum operating speed (*2)	Axis 1 + Axis 2 (maximum composite speed)	mm/sec	6597
	Axis 3 (vertical axis)	mm/sec	1583
	Axis 4 (rotational axis)	degree/sec	1200
Positioning repeatability (*3)	Axis 1 + Axis 2	mm	±0.015
	Axis 3 (vertical axis)	mm	±0.010
	Axis 4 (rotational axis)	degree	±0.005
Cycle time (*4)			0.50
Load capacity	Rated	kg	5
	Maximum	kg	20
Push-in thrust of axis 3 (vertical axis)	Dynamic (*8)	N (kgf)	265 (27.0)
	Static (*9)	N (kgf)	188 (19.1)
Permissible load on axis 4	Permissible moment of inertia (*5)	kg·m^2	0.1
	Permissible torque	N·m (kgf·cm)	6.7 (68.3)
Permissible tool diameter (*6)		mm	ϕ100
Origin detection			Absolute
User wiring			D-sub 25-pin connector with 25-core AWG26 shielded cable (socket)
Alarm indicator (*7)			One small, red LED indicator (rated voltage: 24 V)
User piping			Two air tubes (outer diameter: ϕ6, inner diameter: ϕ4) (normal service pressure: 0.8 MPa) Two air tubes (outer diameter: ϕ4, inner diameter: ϕ2.5) (normal service pressure: 0.8 MPa)

Item			Specifications
Operating environment	Ambient temperature/humidity		Temperature: 0 to 40°C, humidity: 20 to 85%RH or less (non-condensing)
	Altitude	m	1,000 or less
Noise		dB	74
Robot weight		kg	58
Brake power source for main unit		W	24V DC ±10% 20W
Controller	Power supply		230 V 50/60 Hz 15 A
	Allowable supply voltage fluctuation	%	±10
	Overvoltage category (IEC60664-1)		Category III
	Pollution degree (IEC60664-1)		Pollution degree 3

*1 To move the robot horizontally at high speed, perform teaching so that the vertical axis stays as close to the bottom position as possible. (Fig. 1)
To operate the robot with its vertical axis at the bottom position, the speed and acceleration must be reduced as appropriate. (Fig. 2)
*2 Assuming PTP instruction operation.
*3 Measured at a constant ambient temperature of 20°C.
*4 Measured when the robot is operated at the maximum speed, carrying a rated load of 5 kg.
*5 The permissible moment of inertia converted to a value at the rotational center of axis 4. The offset from the rotational center of axis 4 to the tool's center of gravity is assumed to be 50 mm or less. (Fig. 3)
If the tool's center of gravity is further away from the rotational center of axis 4, the speed and acceleration must be reduced as appropriate.
*6 If the tool exceeds the permissible diameter, it will contact the robot inside the robot's range of movement. (Fig. 4)
*7 To enable the alarm LED indicator, the user must provide a circuit that supplies 24 VDC to the LED terminal in the user connector in response to the controller I/O output signal, etc.
*8 A force of up to three times the dynamic push-in thrust may be applied at any given moment.
*9 The static thrust refers to thrust generated within the robot's range of operation based on a PAPR command.

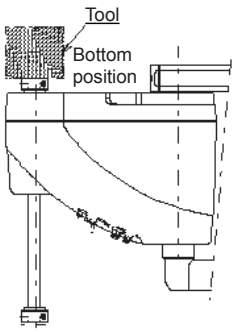

(Fig. 1)

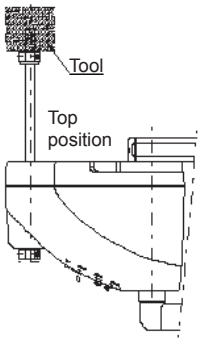

(Fig. 2)

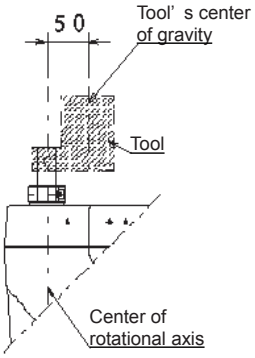

(Fig. 3)

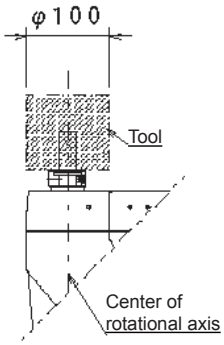

(Fig. 4)

Reference design standards: Annex I to Machine Directives, EN292-1, EN292-2, EN1050, EN60204-1, EN775

IX-HNN80□□ (Arm Length 800, Ceiling-mount Specification)

Item			Specifications
Type			IX-HNN80□□-**L-T1
Degree of freedom			Four degrees of freedom
Overall arm length		mm	800
Arm 1 length		mm	450
Arm 2 length		mm	350
Drive method	Axis 1 (arm 1)		AC servo motor + Speed reducer
	Axis 2 (arm 2)		AC servo motor + Speed reducer
	Axis 3 (vertical axis)		AC servo motor with brake + Belt + Ball-screw spline
	Axis 4 (rotational axis)		AC servo motor with brake + Speed reducer + Belt + Spline
Motor capacity	Axis 1 (arm 1)	W	750
	Axis 2 (arm 2)	W	400
	Axis 3 (vertical axis)	W	400
	Axis 4 (rotational axis)	W	200
Movement range	Axis 1 (arm 1)	degree	±125
	Axis 2 (arm 2)	degree	±145
	Axis 3 (vertical axis) (*1)	mm	200 (Optional: 400)
	Axis 4 (rotational axis)	degree	±360
Maximum operating speed (*2)	Axis 1 + Axis 2 (maximum composite speed)	mm/sec	7121
	Axis 3 (vertical axis)	mm/sec	1583
	Axis 4 (rotational axis)	degree/sec	1200
Positioning repeatability (*3)	Axis 1 + Axis 2	mm	±0.015
	Axis 3 (vertical axis)	mm	±0.010
	Axis 4 (rotational axis)	degree	±0.005
Cycle time (*4)			0.52
Load capacity	Rated	kg	5
	Maximum	kg	20
Push-in thrust of axis 3 (vertical axis)	Dynamic (*8)	N (kgf)	265 (27.0)
	Static (*9)	N (kgf)	188 (19.1)
Permissible load on axis 4	Permissible moment of inertia (*5)	$kg \cdot m^2$	0.1
	Permissible torque	N·m (kgf·cm)	6.7 (68.3)
Permissible tool diameter (*6)		mm	ϕ100
Origin detection			Absolute
User wiring			D-sub 25-pin connector with 25-core AWG26 shielded cable (socket)
Alarm indicator (*7)			One small, red LED indicator (rated voltage: 24 V)
User piping			Two air tubes (outer diameter: ϕ6, inner diameter: ϕ4) (normal service pressure: 0.8 MPa) Two air tubes (outer diameter: ϕ4, inner diameter: ϕ2.5) (normal service pressure: 0.8 MPa)

Item			Specifications
Operating environment	Ambient temperature/humidity		Temperature: 0 to 40°C, humidity: 20 to 85%RH or less (non-condensing)
	Altitude	m	1,000 or less
Noise		dB	74
Robot weight		kg	60
Brake power source for main unit		W	24V DC ±10%　20W
Controller	Power supply		230 V　50/60 Hz　15 A
	Allowable supply voltage fluctuation	%	±10
	Overvoltage category (IEC60664-1)		Category III
	Pollution degree (IEC60664-1)		Pollution degree 3

*1 To move the robot horizontally at high speed, perform teaching so that the vertical axis stays as close to the top position as possible. (Fig. 1)
To operate the robot with its vertical axis at the bottom position, the speed and acceleration must be reduced as appropriate. (Fig. 2)
*2 Assuming PTP instruction operation.
*3 Measured at a constant ambient temperature of 20°C.
*4 Measured when the robot is operated at the maximum speed, carrying a rated load of 5 kg.
*5 The permissible moment of inertia converted to a value at the rotational center of axis 4. The offset from the rotational center of axis 4 to the tool's center of gravity is assumed to be 50 mm or less. (Fig. 3)
If the tool's center of gravity is further away from the rotational center of axis 4, the speed and acceleration must be reduced as appropriate.
*6 If the tool exceeds the permissible diameter, it will contact the robot inside the robot's range of movement. (Fig. 4)
*7 To enable the alarm LED indicator, the user must provide a circuit that supplies 24 VDC to the LED terminal in the user connector in response to the controller I/O output signal, etc.
*8 A force of up to three times the dynamic push-in thrust may be applied at any given moment.
*9 The static thrust refers to thrust generated within the robot's range of operation based on a PAPR command.

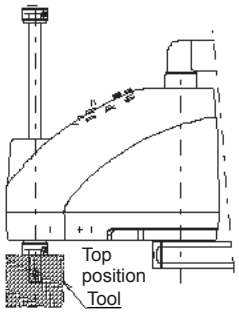

(Fig. 1)

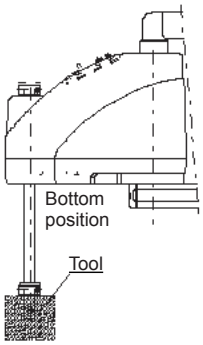

(Fig. 2)

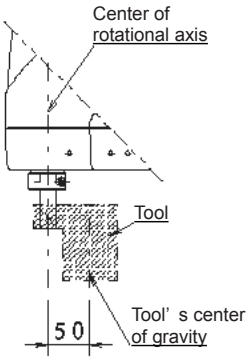

(Fig. 3)

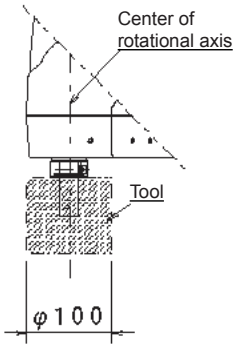

(Fig. 4)

Reference design standards: Annex I to Machine Directives, EN292-1, EN292-2, EN1050, EN60204-1, EN775

IX-INN80□□ (Arm Length 800, Inverse Specification)

Item			Specifications
Type			IX-INN80□□-**L-T1
Degree of freedom			Four degrees of freedom
Overall arm length		mm	800
Arm 1 length		mm	450
Arm 2 length		mm	350
Drive method	Axis 1 (arm 1)		AC servo motor + Speed reducer
	Axis 2 (arm 2)		AC servo motor + Speed reducer
	Axis 3 (vertical axis)		AC servo motor with brake + Belt + Ball-screw spline
	Axis 4 (rotational axis)		AC servo motor with brake + Speed reducer + Belt + Spline
Motor capacity	Axis 1 (arm 1)	W	750
	Axis 2 (arm 2)	W	400
	Axis 3 (vertical axis)	W	400
	Axis 4 (rotational axis)	W	200
Movement range	Axis 1 (arm 1)	degree	±125
	Axis 2 (arm 2)	degree	±145
	Axis 3 (vertical axis) (*1)	mm	200 (Optional: 400)
	Axis 4 (rotational axis)	degree	±360
Maximum operating speed (*2)	Axis 1 + Axis 2 (maximum composite speed)	mm/sec	7121
	Axis 3 (vertical axis)	mm/sec	1583
	Axis 4 (rotational axis)	degree/sec	1200
Positioning repeatability (*3)	Axis 1 + Axis 2	mm	±0.015
	Axis 3 (vertical axis)	mm	±0.010
	Axis 4 (rotational axis)	degree	±0.005
Cycle time (*4)			0.52
Load capacity	Rated	kg	5
	Maximum	kg	20
Push-in thrust of axis 3 (vertical axis)	Dynamic (*8)	N (kgf)	265 (27.0)
	Static (*9)	N (kgf)	188 (19.1)
Permissible load on axis 4	Permissible moment of inertia (*5)	kg·m^2	0.1
	Permissible torque	N·m (kgf·cm)	6.7 (68.3)
Permissible tool diameter (*6)		mm	ϕ100
Origin detection			Absolute
User wiring			D-sub 25-pin connector with 25-core AWG26 shielded cable (socket)
Alarm indicator (*7)			One small, red LED indicator (rated voltage: 24 V)
User piping			Two air tubes (outer diameter: ϕ6, inner diameter: ϕ4) (normal service pressure: 0.8 MPa) Two air tubes (outer diameter: ϕ4, inner diameter: ϕ2.5) (normal service pressure: 0.8 MPa)

Item			Specifications
Operating environment	Ambient temperature/humidity		Temperature: 0 to 40°C, humidity: 20 to 85%RH or less (non-condensing)
	Altitude	m	1,000 or less
Noise		dB	74
Robot weight		kg	60
Brake power source for main unit		W	24V DC ±10% 20W
Controller	Power supply		230 V 50/60 Hz 15 A
	Allowable supply voltage fluctuation	%	±10
	Overvoltage category (IEC60664-1)		Category III
	Pollution degree (IEC60664-1)		Pollution degree 3

*1 To move the robot horizontally at high speed, perform teaching so that the vertical axis stays as close to the bottom position as possible. (Fig. 1)
To operate the robot with its vertical axis at the bottom position, the speed and acceleration must be reduced as appropriate. (Fig. 2)
*2 Assuming PTP instruction operation.
*3 Measured at a constant ambient temperature of 20°C.
*4 Measured when the robot is operated at the maximum speed, carrying a rated load of 5 kg.
*5 The permissible moment of inertia converted to a value at the rotational center of axis 4. The offset from the rotational center of axis 4 to the tool's center of gravity is assumed to be 50 mm or less. (Fig. 3)
If the tool's center of gravity is further away from the rotational center of axis 4, the speed and acceleration must be reduced as appropriate.
*6 If the tool exceeds the permissible diameter, it will contact the robot inside the robot's range of movement. (Fig. 4)
*7 To enable the alarm LED indicator, the user must provide a circuit that supplies 24 VDC to the LED terminal in the user connector in response to the controller I/O output signal, etc.
*8 A force of up to three times the dynamic push-in thrust may be applied at any given moment.
*9 The static thrust refers to thrust generated within the robot's range of operation based on a PAPR command.

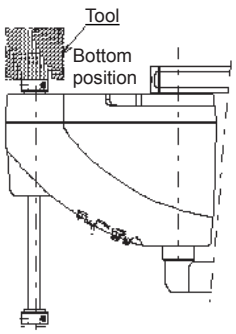

(Fig. 1)

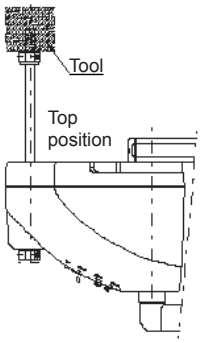

(Fig. 2)

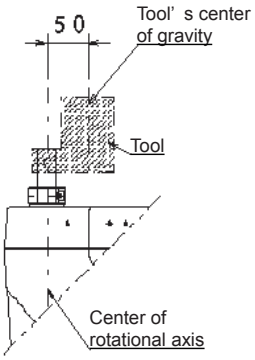

(Fig. 3)

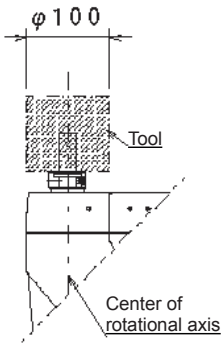

(Fig. 4)

Reference design standards: Annex I to Machine Directives, EN292-1, EN292-2, EN1050, EN60204-1, EN775

7.2 External Dimensions

IX-HNN-50□□

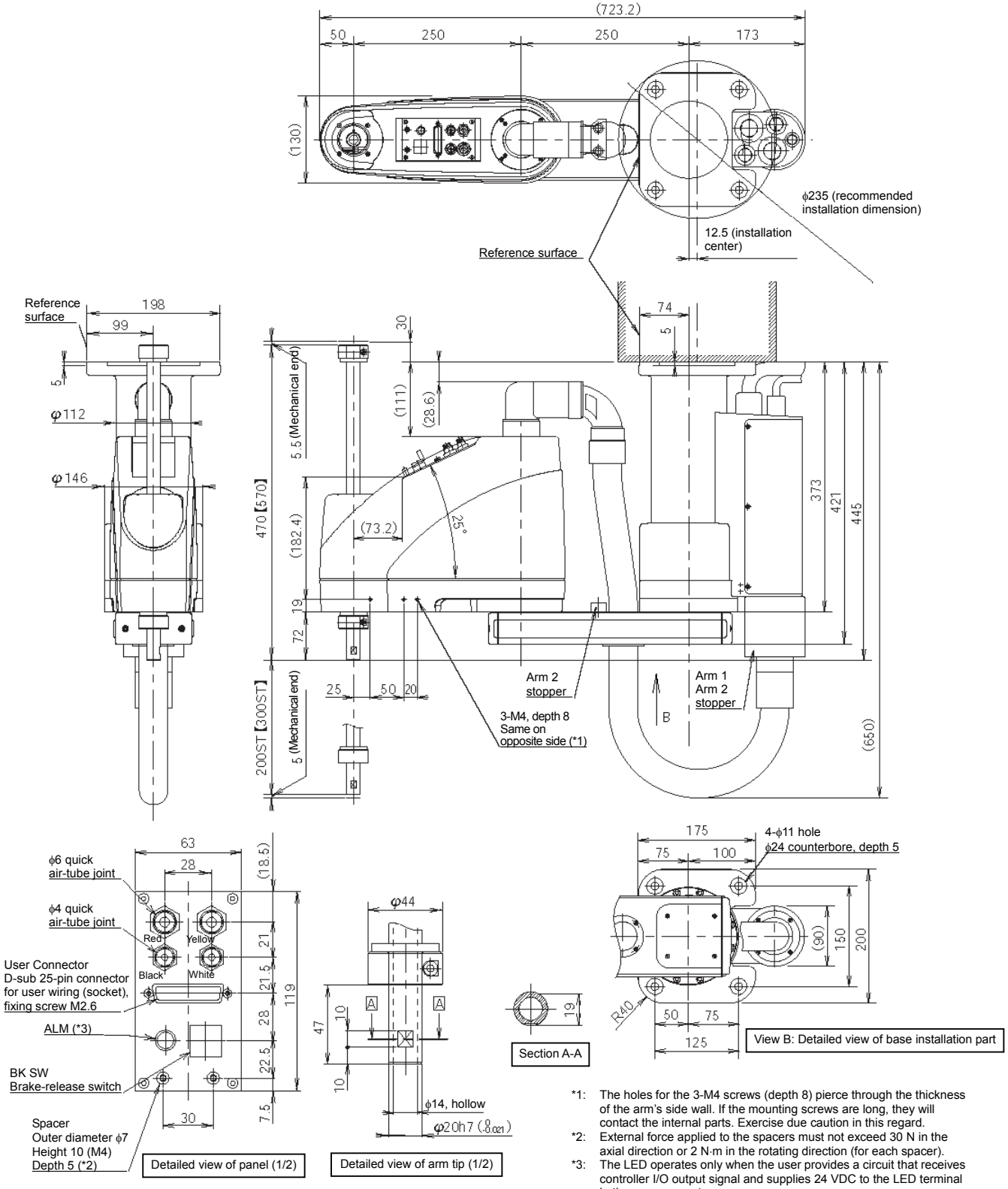

*1: The holes for the 3-M4 screws (depth 8) pierce through the thickness of the arm's side wall. If the mounting screws are long, they will contact the internal parts. Exercise due caution in this regard.

*2: External force applied to the spacers must not exceed 30 N in the axial direction or 2 N·m in the rotating direction (for each spacer).

*3: The LED operates only when the user provides a circuit that receives controller I/O output signal and supplies 24 VDC to the LED terminal in the user connector.

IX-HNN-60□□

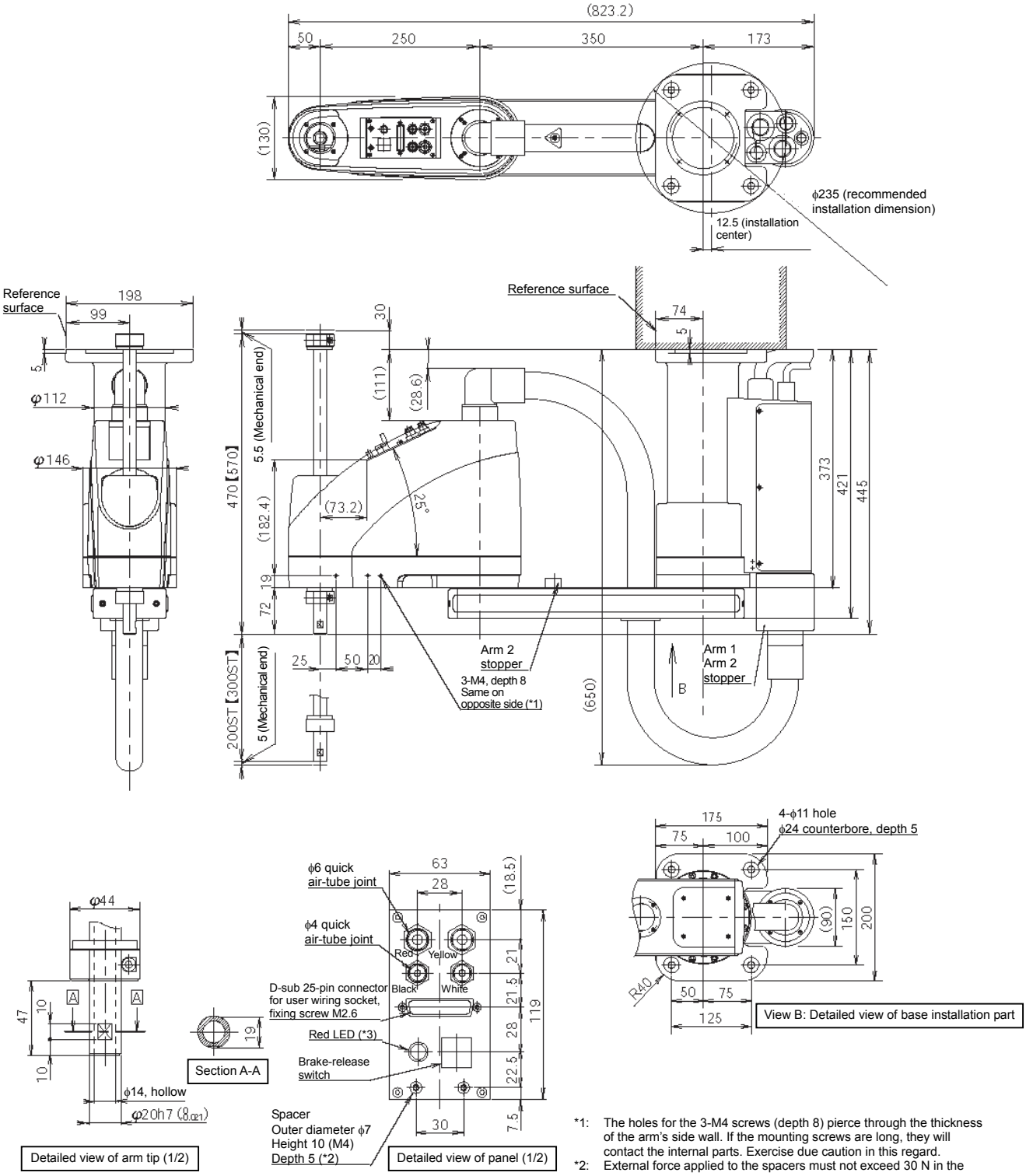

*1: The holes for the 3-M4 screws (depth 8) pierce through the thickness of the arm's side wall. If the mounting screws are long, they will contact the internal parts. Exercise due caution in this regard.

*2: External force applied to the spacers must not exceed 30 N in the axial direction or 2 N·m in the rotating direction (for each spacer).

*3: The LED operates only when the user provides a circuit that receives controller I/O output signal and supplies 24 VDC to the LED terminal in the user connector.

IX-HNN-70□□

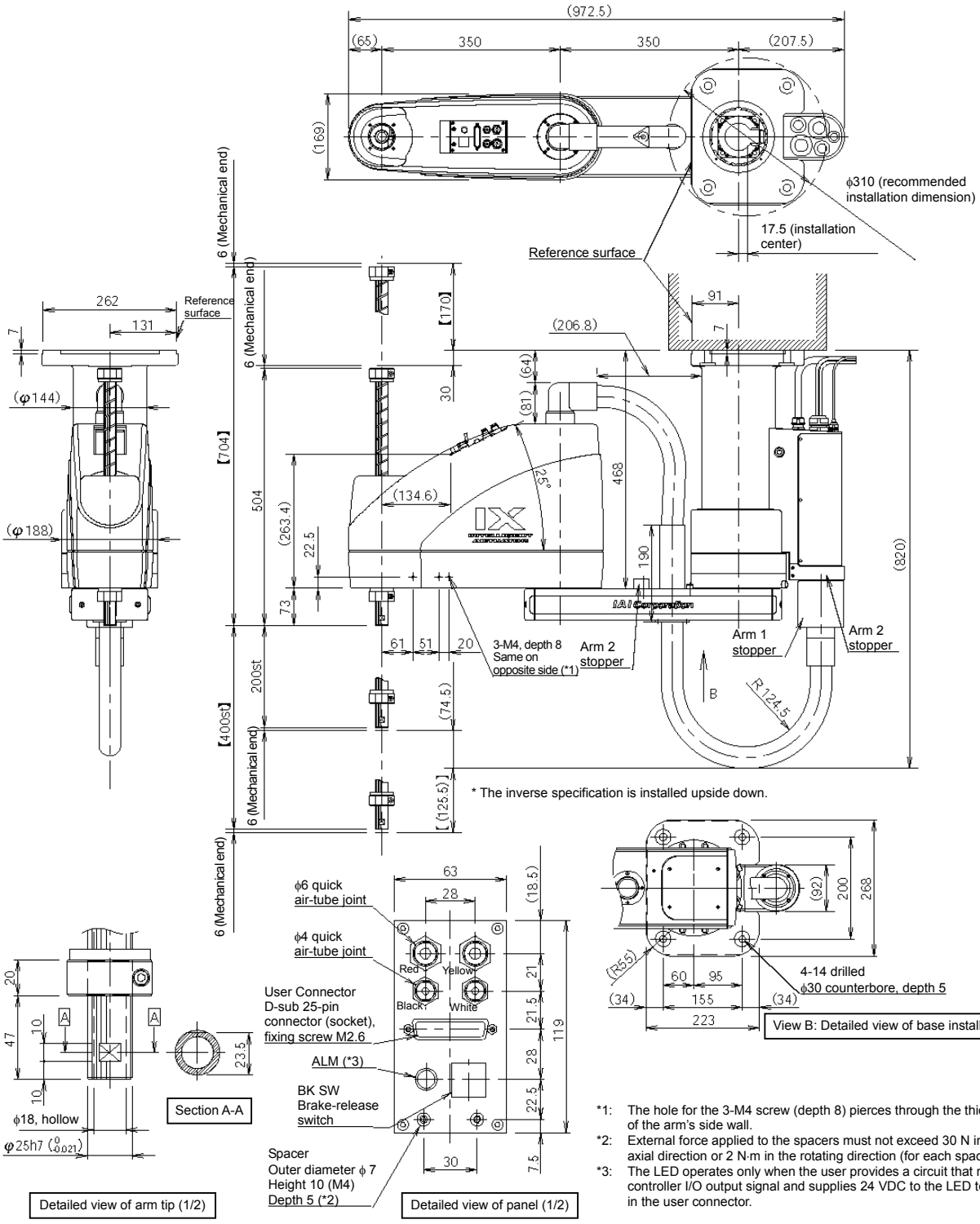

*1: The hole for the 3-M4 screw (depth 8) pierces through the thickness of the arm's side wall.
*2: External force applied to the spacers must not exceed 30 N in the axial direction or 2 N·m in the rotating direction (for each spacer).
*3: The LED operates only when the user provides a circuit that receives controller I/O output signal and supplies 24 VDC to the LED terminal in the user connector.

IX-HNN-80□□

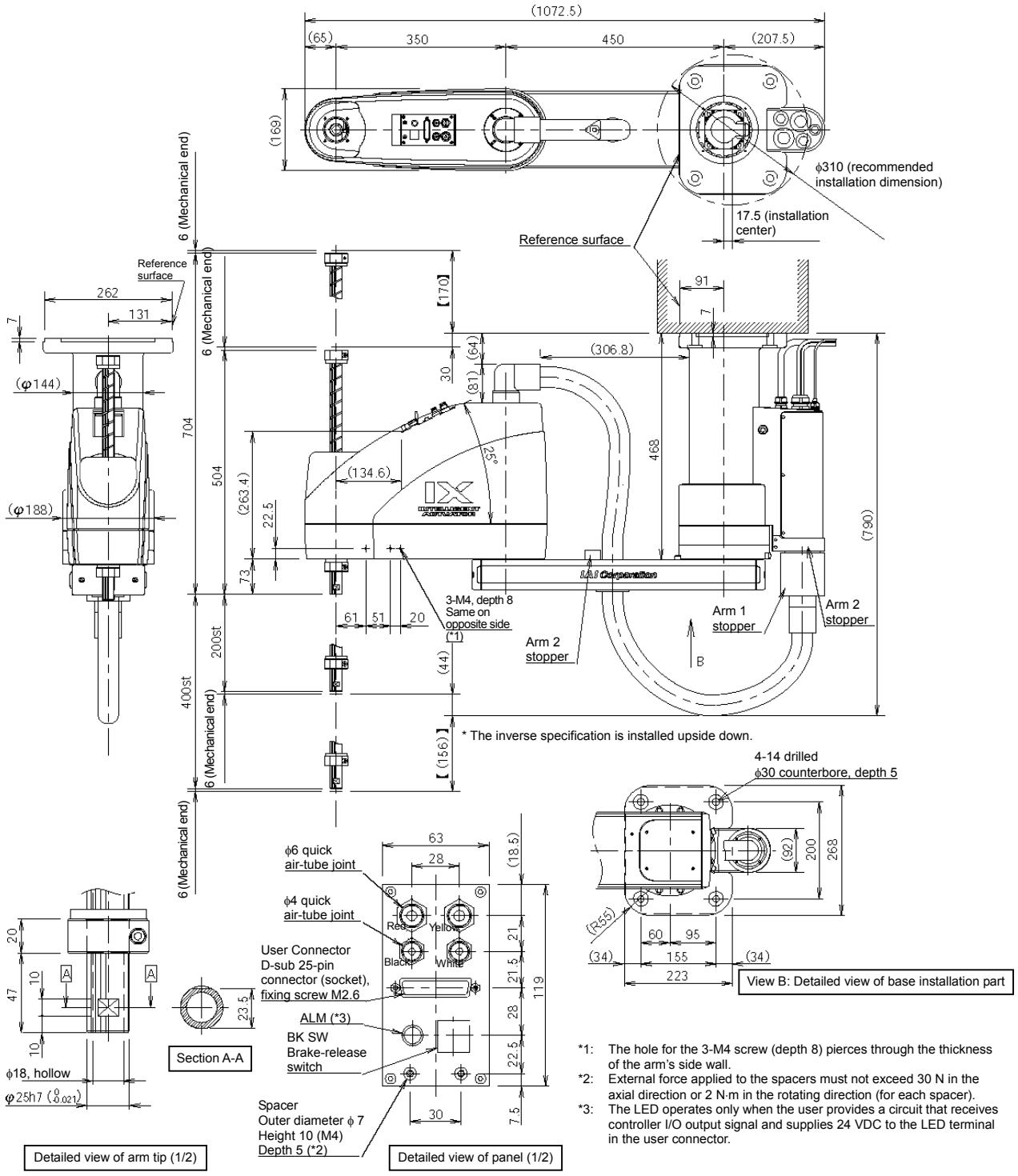

*1: The hole for the 3-M4 screw (depth 8) pierces through the thickness of the arm's side wall.
*2: External force applied to the spacers must not exceed 30 N in the axial direction or 2 N·m in the rotating direction (for each spacer).
*3: The LED operates only when the user provides a circuit that receives controller I/O output signal and supplies 24 VDC to the LED terminal in the user connector.

7.3 Robot Operation Area

IX-HNN-50□□
IX-INN-50□□

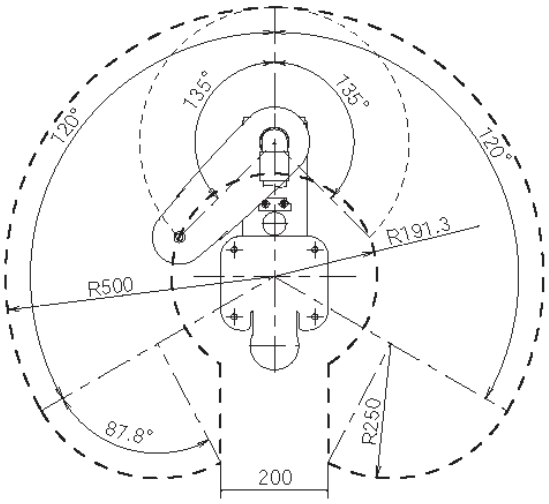

(Operation prohibited area)

Movement range

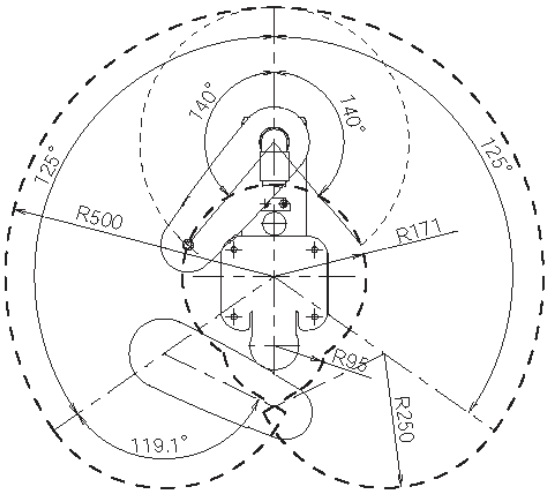

Stopper position range

IX-HNN-60□□
IX-INN-60□□

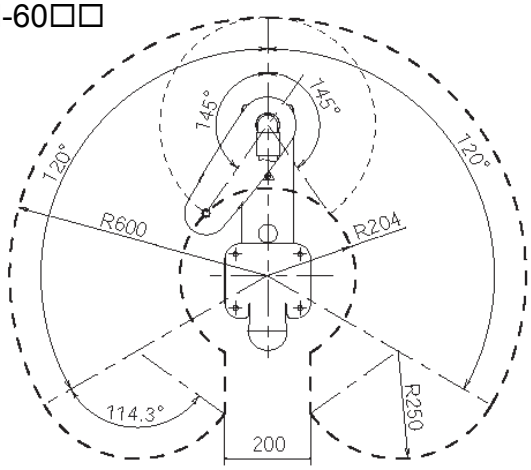

(Operation prohibited area)

Movement range

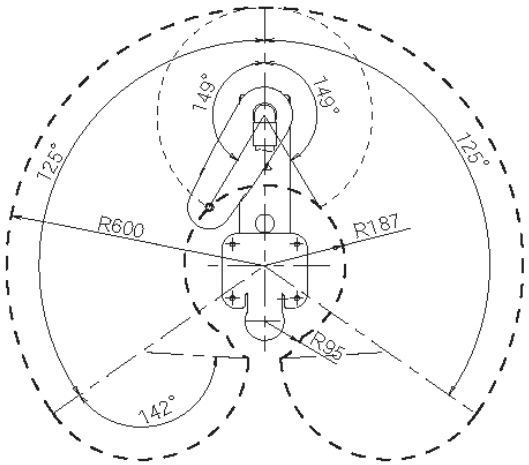

Stopper position range

IX-HNN-70□□
IX-INN-70□□

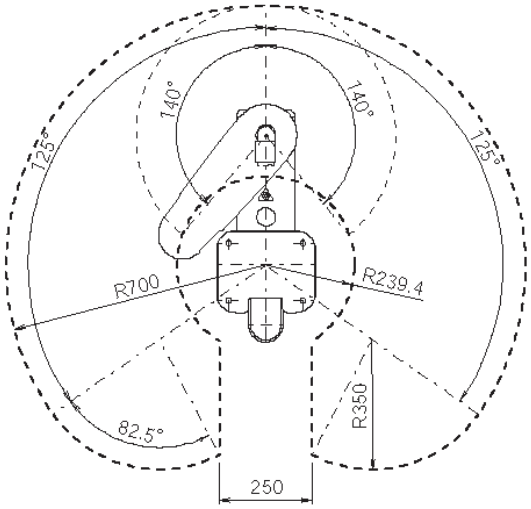

(Operation prohibited area)

Movement range

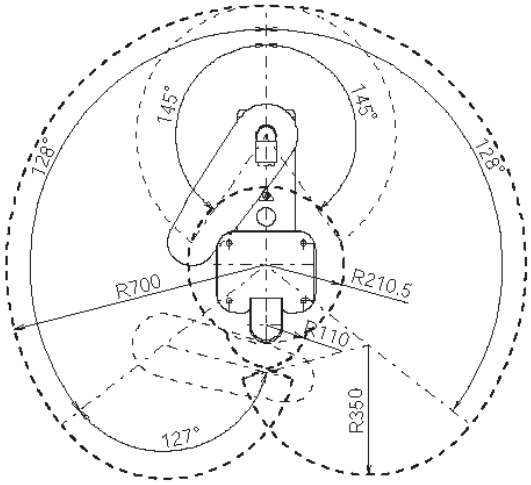

Stopper position range

IX-HNN-80□□
IX-INN-80□□

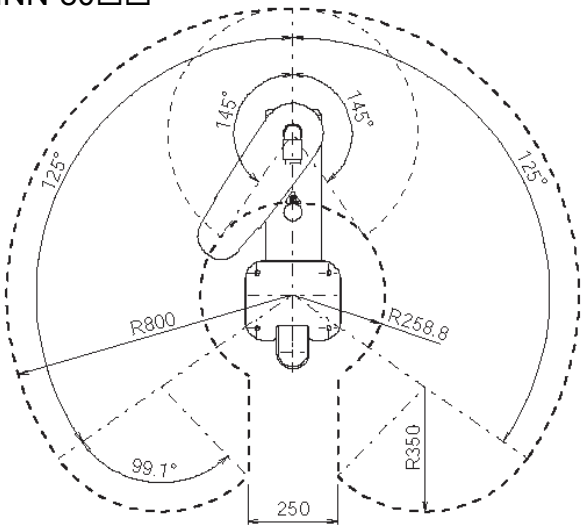

(Operation prohibited area)

Movement range

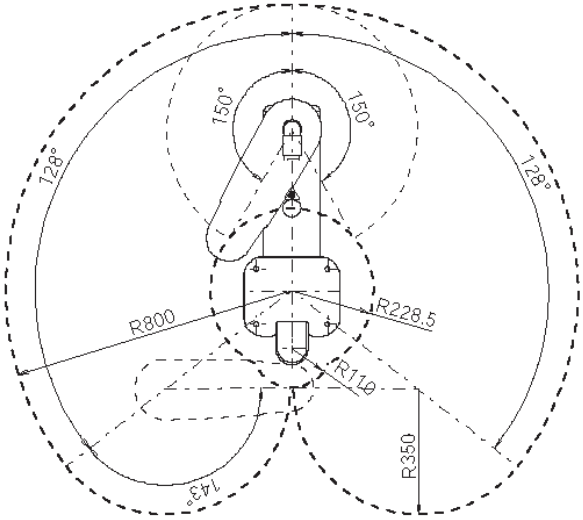

Stopper position range

7.4 Wiring Diagram

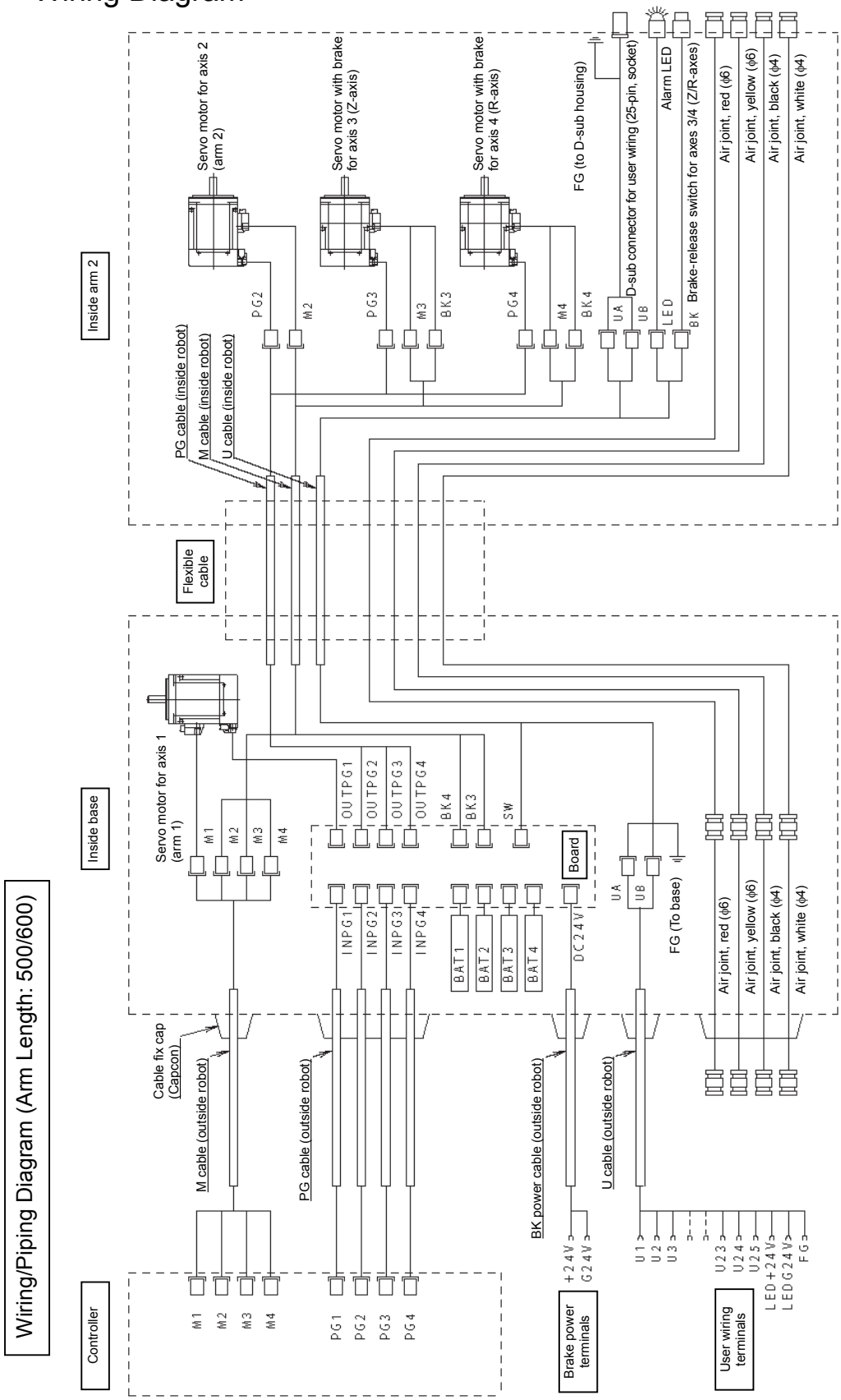

Notes
(1) The actual layout of board connectors varies from this drawing.
(2) Since the brake power circuit is provided on the primary side (high-voltage side), a dedicated 24 V power supply is required for this circuit. The 24 V power supply for I/O circuits used on the secondary side (low-voltage side) cannot be shared.
(3) To operate the alarm LED, the user must provide a circuit that uses the controller I/O output signal.

7.5 230V Circuit Components

IX-HNN50**/60**, IX-INN50**/60**

No.	Code name	Model	Manufacturer	Remarks
1	Axis 1 servo motor	TS4609 N2027 E200	Tamagawa Seiki	AC servo motor, ☐ 60, 400 W, key groove, CE certified
2	Axis 2 servo motor	TS4607 N2027 E200		AC servo motor, ☐ 60, 200 W, key groove, CE certified
3	Axis 3 servo motor w/ brake	TS4607 N7027 E200		AC servo motor, ☐ 60, 200 W, w/ brake, round shaft, CE certified
4	Axis 4 servo motor w/ brake	TS4606 N7027 E200		AC servo motor, ☐ 60, 100 W, key groove, CE certified
5	M cable (inside robot)		IAI	Wire: 300 V, 105°C (rated), AWG18 (0.84 mm^2), flexible cable, UL VW-1, c-UL FT-1
6	M cable (outside robot)		IAI	Wire: 300 V, 80°C (rated), AWG18 (0.89 mm^2), oil-resistant cable, UL VW-1, c-UL FT-1

IX-HNN70**/80**, IX-INN70**/80**

No.	Code name	Model	Manufacturer	Remarks
1	Axis 1 servo motor	TS4614 N2027 E200	Tamagawa Seiki	AC servo motor, ☐ 80, 750 W, key groove, CE certified
2	Axis 2 servo motor	TS4609 N2027 E200		AC servo motor, ☐ 60, 400 W, key groove, CE certified
3	Axis 3 servo motor w/ brake	TS4609 N7027 E200		AC servo motor, ☐ 60, 400 W, w/ brake, round shaft, CE certified
4	Axis 4 servo motor w/ brake	TS4607 N2027 E200		AC servo motor, ☐ 60, 200 W, key groove, CE certified
5	M cable (inside robot)		IAI	Wire: 300 V, 105°C (rated), AWG18 (0.84 mm^2), flexible cable, UL VW-1, c-UL FT-1
6	M cable (outside robot)		IAI	Wire: 300 V, 80°C (rated), AWG18 (0.89 mm^2), oil-resistant cable, UL VW-1, c-UL FT-1

8. Warranty

8.1 Warranty Period

One of the following periods, whichever is shorter:
- 18 months after shipment from IAI
- 12 months after delivery to the specified location
- 2,500 hours of operation

8.2 Scope of Warranty

Our products are covered by warranty when all of the following conditions are met. Faulty products covered by warranty will be replaced or repaired free of charge:

(1) The breakdown or problem in question pertains to our product as delivered by us or our authorized dealer.

(2) The breakdown or problem in question occurred during the warranty period.

(3) The breakdown or problem in question occurred while the product was in use for an appropriate purpose under the conditions and environment of use specified in the operation manual and catalog.

(4) The breakdown of problem in question was caused by a specification defect or problem, or by a quality issue with our product.

Note that breakdowns due to any of the following reasons are excluded from the scope of warranty:
[1] Anything other than our product
[2] Modification or repair performed by a party other than us (unless we have approved such modification or repair)
[3] Anything that could not be easily predicted with the level of science and technology available at the time of shipment from our company
[4] A natural disaster, man-made disaster, incident or accident for which we are not liable
[5] Natural fading of paint or other symptoms of aging
[6] Wear, depletion or other expected result of use
[7] Operation noise, vibration or other subjective sensation not affecting function or maintenance

Note that the warranty only covers our product as delivered and that any secondary loss arising from a breakdown of our product is excluded from the scope of warranty.

8.3 Honoring the Warranty

As a rule, the product must be brought to us for repair under warranty.

8.4 Limited Liability

(1) We shall assume no liability for any special damage, consequential loss or passive loss such as a loss of expected profit arising from or in connection with our product.
(2) We shall not be liable for any program or control method created by the customer to operate our product or for the result of such program or control method.

8.5 Conditions of Conformance with Applicable Standards/Regulations, Etc., and Applications

(1) If our product is combined with another product or any system, device, etc., used by the customer, the customer must first check the applicable standards, regulations and/or rules. The customer is also responsible for confirming that such combination with our product conforms to the applicable standards, etc. In such a case we will not be liable for the conformance of our product with the applicable standards, etc.

(2) Our product is for general industrial use. It is not intended or designed for the applications specified below, which require a high level of safety. Accordingly, as a rule our product cannot be used in these applications. Contact us if you must use our product for any of these applications:

[1] Medical equipment pertaining to maintenance or management of human life or health
[2] A mechanism or mechanical equipment intended to move or transport people (such as a vehicle, railway facility or aviation facility)
[3] Important safety parts of mechanical equipment (such as safety devices)
[4] Equipment used to handle cultural assets, art or other irreplaceable items

(3) Contact us at the earliest opportunity if our product is to be used in any condition or environment that differs from what is specified in the catalog or operation manual.

8.6 Other Items Excluded from Warranty

The price of the product delivered to you does not include expenses associated with programming, the dispatch of engineers, etc. Accordingly, a separate fee will be charged in the following cases even during the warranty period:

[1] Guidance for installation/adjustment and witnessing of test operation
[2] Maintenance and inspection
[3] Technical guidance and education on operating/wiring methods, etc.
[4] Technical guidance and education on programming and other items related to programs

9. EC Declaration of Conformity

This product comes with EC Declaration of Conformity as it complies with Machinery Directive if Option CE is selected.

IAI Quality and Innovation

IAI CORPORATION
577-1 Obane, Shimizu-Ku, Shizuoka City, Shizuoka 424-0103 Japan
Phone +81-543-64-5105 Facsimile +81-543-64-5182

EC DECLARATION OF CONFORMITY

Manufacturer:

IAI CORPORATION
577-1 Obane, Shimizu-Ku, Shizuoka City, Shizuoka 424-0103 Japan

Authorized representative within the Community:

IAI Industrieroboter GmbH
Ober der Röth 4, D-65824 Schwalbach am Taunus, Germany

Hereby declares that the equipment described below
complies with the provisions of the below European Directives and the harmonized standards.

IX SCARA Robot
(IX series)

Models covered are shown at appendix 1,2,3, and 4 from the next page.

We can provide electronic data of relevant information on the partly completed machinery in response to a reasonable request by the national authorities.

And also we request that the partly completed machinery must not be put into service until the final machinery has been declared in conformity with the provisions of Machinery Directive.

- Machinery Directive: 2006/42/EC
  EN ISO 12100:2010, EN ISO 13849-1:2008,
  EN ISO 10218-1:2011
- EMC Directive: 2014/30/EU
  EN 55011: 2009/A1:2010, EN 61000-6-2: 2005,
  EN 61000-3-2: 2014, EN 61000-3-3: 2013
  EN61000-3: 2004/A1: 2012
- RoHS Directive: 2011/65/EU
  EN 50581: 2012

Done at Shizuoka, Japan,

On 3. Jun. , 2019

President Toru Ishida

ORIGINAL

Declaration of Conformity for IX Series Ver 003 Page 1 of 5

IAI
Quality and Innovation

IAI CORPORATION
577-1 Obane, Shimizu-Ku, Shizuoka City, Shizuoka 424-0103 Japan
Phone +81-543-64-5105 Facsimile +81-543-64-5182

Appendix 1

●Standard Type

Series	Type		Cable length		Controller Type		Option
IX -	NNN1205 NNN1505 NNN1805	-	3L 5L	-	T2	-	JY B CE
IX -	NNN2515 NNN3515 NNN5020 NNN5030 NNN6020 NNN6030 NNN7020 NNN7040 NNN8020 NNN8040	-	5L 10L	-	T1 T2	-	CE
IX -	NNN2515H NNN3515H NNN5020H NNN5030H NNN6020H NNN6030H NNN7020H NNN7040H NNN8020H NNN8040H	-	5L 10L	-	T2	-	JY CE KCS

●High Speed Type

Series	Type		Cable length		Controller Type		Option
IX -	NSN5016 NSN6016	-	5L 10L	-	T1 T2	-	CE
IX -	NSN5016H NSN6016H	-	5L 10L	-	T2	-	JY CE KCS

IAI
Quality and Innovation

IAI CORPORATION
577-1 Obane, Shimizu-Ku, Shizuoka City, Shizuoka 424-0103 Japan
Phone +81-543-64-5105 Facsimile +81-543-64-5182

Appendix 2

●Water and Dust resident Type

Series	Type		Cable length		Controller Type		Option
IX -	NNW2515 NNW3515 NNW5020 NNW5030 NNW6020 NNW6030 NNW7020 NNW7040 NNW8020 NNW8040	-	5L 10L	-	T1 T2	-	CE
IX -	NNW2515H NNW3515H NNW5020H NNW5030H NNW6020H NNW6030H NNW7020H NNW7040H NNW8020H NNW8040H	-	5L 10L	-	T2	-	JY CE KCS

●Wall mount Type

Series	Type		Cable length		Controller Type		Option
IX -	TNN3015 TNN3515	-	5L 10L	-	T1 T2	-	CE
IX -	TNN3015H TNN3515H	-	5L 10L	-	T2	-	JY CE KCS

●Wall mount / Inverse Type

Series	Type		Cable length		Controller Type		Option
IX -	UNN3015 UNN3515	-	5L 10L	-	T1 T2	-	CE
IX -	UNN3015H UNN3515H	-	5L 10L	-	T2	-	JY CE KCS

IAI
Quality and Innovation

IAI CORPORATION
577-1 Obane, Shimizu-Ku, Shizuoka City, Shizuoka 424-0103 Japan
Phone +81-543-64-5105 Facsimile +81-543-64-5182

Appendix 3

●Ceiling mount Type

Series	Type		Cable length		Controller Type		Option
IX -	HNN5020 HNN6020 HNN7020 HNN7040 HNN8020 HNN8040	-	5L 10L	-	T1 T2	-	CE
IX -	HNN5020H HNN6020H HNN7020H HNN7040H HNN8020H HNN8040H	-	5L 10L	-	T2	-	JY CE KCS

●Ceiling mount / Inverse Type

Series	Type		Cable length		Controller Type		Option
IX -	INN5020 INN6020 INN7020 INN7040 INN8020 INN8040	-	5L 10L	-	T1 T2	-	CE
IX -	INN5020H INN6020H INN7020H INN7040H INN8020H INN8040H	-	5L 10L	-	T2	-	JY CE KCS

IAI
Quality and Innovation

IAI CORPORATION
577-1 Obane, Shimizu-Ku, Shizuoka City, Shizuoka 424-0103 Japan
Phone +81-543-64-5105 Facsimile +81-543-64-5182

Appendix 4

●Creenroom Type

Series	Type	Cable length	Controller Type	Option
IX -	NNC1205 NNC1505 NNC1805	3L 5L	T2	JY B CE
IX -	NNC2515 NNC3515 NNC5020 NNC5030 NNC6020 NNC6030 NNC7020 NNC7040 NNC8020 NNC8040	5L 10L	T1 T2	CE
IX -	NNC2515H NNC3515H NNC5020H NNC5030H NNC6020H NNC6030H NNC7020H NNC7040H NNC8020H NNC8040H	5L 10L	T2	JY CE KCS

●Special Order Type

Series	Type	Cable length	Controller Type	Special Order	CE Option
IX -	NNN2522	3L	T1	SP	CE
IX -	NNN2522	3L	T1	SP2	CE
IX -	NNC3515	5L	T1	SP	CE
IX -	NNC3515	10L	T1	SP	CE
IX -	NNN3515	5L	T2	SP	CE
IX -	NNN3515	10L	T2	SP	CE
IX -	NSN6016	5L	T2	SP	CE
IX -	NSN6016	10L	T2	SP	CE
IX -	HSN6020	5L	T2	SP	CE
IX -	HSN6020	10L	T2	SP	CE

※ **Every CE and KCs is set by option.**

Change History

Revision Date	Description of Revision
April 2011	Third edition A page for CE Marking added
March 2012	Fourth edition Introduction, Safety Symbols and Safety Precautions are deleted Pg. 1 to 7 Safety Guide added Pg. 8 Caution in Handling added Pg. 20 Brake voltage source capacity from 20W to 30W → changed to 20W Pg. 30 Caution notes added telling to go to see the doctor to have an appropriate treatment when the grease got into an eye Pg. 59, 61, 63, 65, 67, 69, 71, 73 Brake voltage source capacity 20W added to specifications Pg. 82, 83 Contents changed in 8. Warranty 8. Contacting Us deleted
August 2012	Fifth edition 4.1 Installation Posture added
July 2019	5C edition Pg. 85 EC Declaration of Conformity added

Manual No.: ME3636-5C (July 2019)

Quality and Innovation

IAI Corporation

Head Office: 577-1 Obane Shimizu-KU Shizuoka City Shizuoka 424-0103, Japan
TEL +81-54-364-5105 FAX +81-54-364-2589
website: www.iai-robot.co.jp/

Technical Support available in USA, Europe and China

IAI America, Inc.

Head Office: 2690 W. 237th Street, Torrance, CA 90505
TEL (310) 891-6015 FAX (310) 891-0815
Chicago Office: 110 East State Parkway, Schaumburg, IL 60173
TEL (847) 908-1400 FAX (847) 908-1399
Atlanta Office: 1220 Kennestone Circle, Suite 108, Marietta, GA 30066
TEL (678) 354-9470 FAX (678) 354-9471
website: www.intelligentactuator.com

IAI Industrieroboter GmbH

Ober der Röth 4, D-65824 Schwalbach am Taunus, Germany
TEL 06196-88950 FAX 06196-889524
website:www.iai-gmbh.de

IAI (Shanghai) Co., Ltd.

SHANGHAI JIAHUA BUSINESS CENTER A8-303, 808, Hongqiao Rd. Shanghai 200030, China
TEL 021-6448-4753 FAX 021-6448-3992
website: www.iai-robot.com

IAI Robot (Thailand) Co., Ltd.

825 PhairojKijja Tower 7th Floor, Debaratana RD., Bangna-Nuea, Bangna, Bangkok 10260, Thailand
TEL +66-2-361-4458 FAX +66-2-361-4456
website:www.iai-robot.co.th

The information contained in this document is subject to change without notice for purposes of product improvement.
Copyright © 2019. Jul. IAI Corporation. All rights reserved.

19.07.000