INTELLIGENT ACTUATOR

IX

INTELLIGENT ACTUATOR

Horizontal Articulated Robot – IX Series

Wall-Mounting Type, Arm Length 300/350 (Wall-Mounting)
IX-TNN-3015H, IX-TNN-3515H

Wall-Mounting Type, Arm Length 300/350 (Inverse)
IX-UNN-3015H, IX-UNN-3515H

Operation Manual Ninth Edition

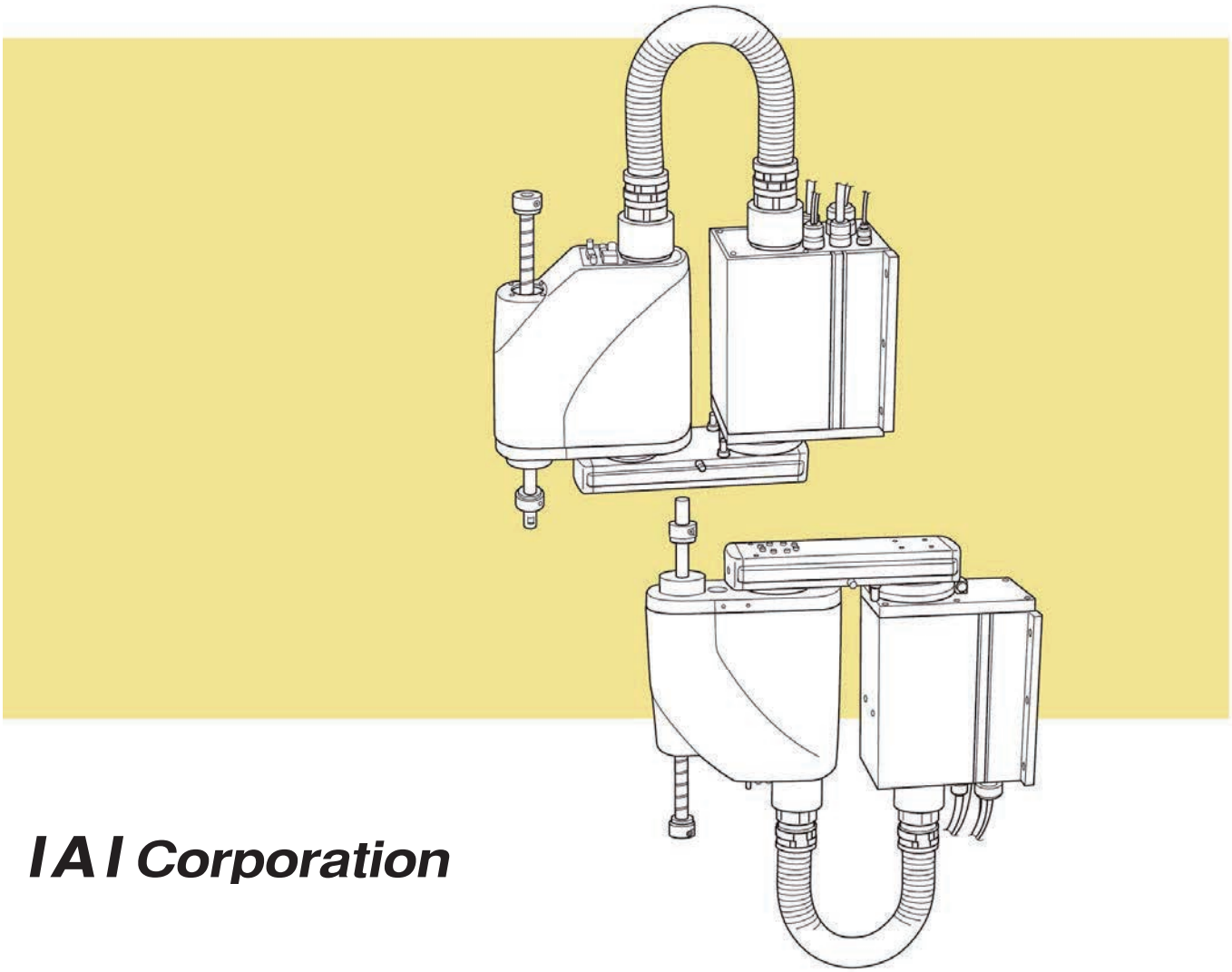

IAI Corporation

Please Read Before Use

Thank you for purchasing our product.

This Operation Manual explains the handling methods, structure and maintenance of this product, among others, providing the information you need to know to use the product safely.

Before using the product, be sure to read this manual and fully understand the contents explained herein to ensure safe use of the product.
The DVD that comes with the product contains operation manuals for IAI products.
When using the product, refer to the necessary portions of the applicable operation manual by printing them out or displaying them on a PC.

After reading the Operation Manual, keep it in a convenient place so that whoever is handling this product can reference it quickly when necessary.

[Important]

- This Operation Manual is original.
- The product cannot be operated in any way unless expressly specified in this Operation Manual. IAI shall assume no responsibility for the outcome of any operation not specified herein.
- Information contained in this Operation Manual is subject to change without notice for the purpose of product improvement.
- If you have any question or comment regarding the content of this manual, please contact the IAI sales office near you.
- Using or copying all or part of this Operation Manual without permission is prohibited.
- The company names, names of products and trademarks of each company shown in the sentences are registered trademarks.

Table of Contents

Safety Guide 1
Handling Precautions 8
International Standards Compliances 12
1. Name of Each Part 13
1.1 Robot 13
1.2 Labels 14
1.3 Label Positions 15
2. External Dimensions 17
3. Robot Operation Area 21
4. Wiring Diagram 22
4.1 Layout Drawing 22
4.2 230 V Circuit Components 23
5. Option 24
5.1 Absolute Reset Jig 24
5.2 Flange 24
5.3 Absolute Data Backup Battery 24
5.4 Cable Joint Cable Type (Model: JY) 25
5.4.1 Motor Cable 25
5.4.2 Encoder Cable 26
5.4.3 User Cable 27
5.4.4 Brake Cable 28
6. Checking after Unpacking 29
6.1 Items Included in the Carton 29
6.2 Operation Manuals Relating to This Product 30
6.3 How to Read Model Nameplate 30
6.4 How to Read Model Number 31
7. Specifications 32
7.1 IX-TNN3015H, IX-UNN3015H 32
7.2 IX-TNN3515H, IX-UNN3515H 34
8. Installation Environment and Storage/Preservation Environment 36
8.1 Installation Environment 36
8.2 Installation Platform 36
8.3 Storage/Preservation Environment 37
9. How to Install 38
9.1 Installation Posture 38
9.2 Installing the Robot 39

10. Connecting the Controller 41
11. Checking after Installation 44
12. Precautions for Use 45
12.1 Setting the Acceleration/Deceleration 45
12.2 Push Force of the Vertical Axis 47
12.3 Tools 48
12.4 Carrying Load 50
12.5 User Wiring and Piping 51
12.6 Moving Direction 53
13. Maintenance and Inspection 54
13.1 Inspection Items and Periods 54
13.2 Ball Screw Spline Grease Supply 56
13.2.1 Applicable Grease and Supply Period 56
13.2.2 Grease Supply 57
13.3 Check for Looseness of Arm Attachment Screws 58
13.4 Replacement of Absolute Backup Battery 59
13.4.1 Preparation 59
13.4.2 Replacement Procedure 60
13.5 Third Axis Timing Belt Visual Check 61
13.6 How to Measure Lost Motion 62
13.7 Forth Axis Timing Belt Visual Check 64
13.8 Absolute Encoder Reset Method 65
13.8.1 Preparation for Absolute Reset 65
13.8.2 Starting the Absolute Reset Menu 66
13.8.3 Absolute Reset Procedure for Arm 1 or 2 67
13.8.4 Absolute Reset Procedure for the Rotational Axis + Vertical Axis 73
14. Warranty 81
14.1 Warranty Period 81
14.2 Scope of Warranty 81
14.3 Honoring the Warranty 81
14.4 Limited Liabil 81
14.5 Conditions of Conformance with Applicable Standards/Regulations, Etc., and Applications 82
14.6 Other Items Excluded from Warranty 82
15. EC Declaration of Conformity 83
Change History 88

Safety Guide

“Safety Guide” has been written to use the machine safely and so prevent personal injury or property damage beforehand. Make sure to read it before the operation of this product.

Safety Precautions for Our Products

The common safety precautions for the use of any of our robots in each operation.

No.	Operation Description	Description
1	Model Selection	● This product has not been planned and designed for the application where high level of safety is required, so the guarantee of the protection of human life is impossible. Accordingly, do not use it in any of the following applications. 1) Medical equipment used to maintain, control or otherwise affect human life or physical health. 2) Mechanisms and machinery designed for the purpose of moving or transporting people (For vehicle, railway facility or air navigation facility) 3) Important safety parts of machinery (Safety device, etc.) ● Do not use the product outside the specifications. Failure to do so may considerably shorten the life of the product. ● Do not use it in any of the following environments. 1) Location where there is any inflammable gas, inflammable object or explosive 2) Place with potential exposure to radiation 3) Location with the ambient temperature or relative humidity exceeding the specification range 4) Location where radiant heat is added from direct sunlight or other large heat source 5) Location where condensation occurs due to abrupt temperature changes 6) Location where there is any corrosive gas (sulfuric acid or hydrochloric acid) 7) Location exposed to significant amount of dust, salt or iron powder 8) Location subject to direct vibration or impact ● For an actuator used in vertical orientation, select a model which is equipped with a brake. If selecting a model with no brake, the moving part may drop when the power is turned OFF and may cause an accident such as an injury or damage on the work piece.

No.	Operation Description	Description
2	Transportation	● When carrying a heavy object, do the work with two or more persons or utilize equipment such as crane. ● When the work is carried out with 2 or more persons, make it clear who is to be the leader and who to be the follower(s) and communicate well with each other to ensure the safety of the workers. ● When in transportation, consider well about the positions to hold, weight and weight balance and pay special attention to the carried object so it would not get hit or dropped. ● Transport it using an appropriate transportation measure. The actuators available for transportation with a crane have eyebolts attached or there are tapped holes to attach bolts. Follow the instructions in the operation manual for each model. ● Do not step or sit on the package. ● Do not put any heavy thing that can deform the package, on it. ● When using a crane capable of 1t or more of weight, have an operator who has qualifications for crane operation and sling work. ● When using a crane or equivalent equipments, make sure not to hang a load that weighs more than the equipment's capability limit. ● Use a hook that is suitable for the load. Consider the safety factor of the hook in such factors as shear strength. ● Do not get on the load that is hung on a crane. ● Do not leave a load hung up with a crane. ● Do not stand under the load that is hung up with a crane.
3	Storage and Preservation	● The storage and preservation environment conforms to the installation environment. However, especially give consideration to the prevention of condensation. ● Store the products with a consideration not to fall them over or drop due to an act of God such as earthquake.
4	Installation and Start	(1) Installation of Robot Main Body and Controller, etc. ● Make sure to securely hold and fix the product (including the work part). A fall, drop or abnormal motion of the product may cause a damage or injury. Also, be equipped for a fall-over or drop due to an act of God such as earthquake. ● Do not get on or put anything on the product. Failure to do so may cause an accidental fall, injury or damage to the product due to a drop of anything, malfunction of the product, performance degradation, or shortening of its life. ● When using the product in any of the places specified below, provide a sufficient shield. 1) Location where electric noise is generated 2) Location where high electrical or magnetic field is present 3) Location with the mains or power lines passing nearby 4) Location where the product may come in contact with water, oil or chemical droplets

No.	Operation Description	Description
4	Installation and Start	(2) Cable Wiring ● Use our company's genuine cables for connecting between the actuator and controller, and for the teaching tool. ● Do not scratch on the cable. Do not bend it forcibly. Do not pull it. Do not coil it around. Do not insert it. Do not put any heavy thing on it. Failure to do so may cause a fire, electric shock or malfunction due to leakage or continuity error. ● Perform the wiring for the product, after turning OFF the power to the unit, so that there is no wiring error. ● When the direct current power (+24V) is connected, take the great care of the directions of positive and negative poles. If the connection direction is not correct, it might cause a fire, product breakdown or malfunction. ● Connect the cable connector securely so that there is no disconnection or looseness. Failure to do so may cause a fire, electric shock or malfunction of the product. ● Never cut and/or reconnect the cables supplied with the product for the purpose of extending or shortening the cable length. Failure to do so may cause the product to malfunction or cause fire.
		(3) Grounding ● The grounding operation should be performed to prevent an electric shock or electrostatic charge, enhance the noise-resistance ability and control the unnecessary electromagnetic radiation. ● For the ground terminal on the AC power cable of the controller and the grounding plate in the control panel, make sure to use a twisted pair cable with wire thickness 0.5mm^2 (AWG20 or equivalent) or more for grounding work. For security grounding, it is necessary to select an appropriate wire thickness suitable for the load. Perform wiring that satisfies the specifications (electrical equipment technical standards). ● Perform Class D Grounding (former Class 3 Grounding with ground resistance 100Ω or below).

No.	Operation Description	Description
4	Installation and Start	(4) Safety Measures ● When the work is carried out with 2 or more persons, make it clear who is to be the leader and who to be the follower(s) and communicate well with each other to ensure the safety of the workers. ● When the product is under operation or in the ready mode, take the safety measures (such as the installation of safety and protection fence) so that nobody can enter the area within the robot's movable range. When the robot under operation is touched, it may result in death or serious injury. ● Make sure to install the emergency stop circuit so that the unit can be stopped immediately in an emergency during the unit operation. ● Take the safety measure not to start up the unit only with the power turning ON. Failure to do so may start up the machine suddenly and cause an injury or damage to the product. ● Take the safety measure not to start up the machine only with the emergency stop cancellation or recovery after the power failure. Failure to do so may result in an electric shock or injury due to unexpected power input. ● When the installation or adjustment operation is to be performed, give clear warnings such as "Under Operation; Do not turn ON the power!" etc. Sudden power input may cause an electric shock or injury. ● Take the measure so that the work part is not dropped in power failure or emergency stop. ● Wear protection gloves, goggle or safety shoes, as necessary, to secure safety. ● Do not insert a finger or object in the openings in the product. Failure to do so may cause an injury, electric shock, damage to the product or fire. ● When releasing the brake on a vertically oriented actuator, exercise precaution not to pinch your hand or damage the work parts with the actuator dropped by gravity.
5	Teaching	● When the work is carried out with 2 or more persons, make it clear who is to be the leader and who to be the follower(s) and communicate well with each other to ensure the safety of the workers. ● Perform the teaching operation from outside the safety protection fence, if possible. In the case that the operation is to be performed unavoidably inside the safety protection fence, prepare the "Stipulations for the Operation" and make sure that all the workers acknowledge and understand them well. ● When the operation is to be performed inside the safety protection fence, the worker should have an emergency stop switch at hand with him so that the unit can be stopped any time in an emergency. ● When the operation is to be performed inside the safety protection fence, in addition to the workers, arrange a watchman so that the machine can be stopped any time in an emergency. Also, keep watch on the operation so that any third person can not operate the switches carelessly. ● Place a sign "Under Operation" at the position easy to see. ● When releasing the brake on a vertically oriented actuator, exercise precaution not to pinch your hand or damage the work parts with the actuator dropped by gravity. * Safety protection Fence : In the case that there is no safety protection fence, the movable range should be indicated.

No.	Operation Description	Description
6	Trial Operation	● When the work is carried out with 2 or more persons, make it clear who is to be the leader and who to be the follower(s) and communicate well with each other to ensure the safety of the workers. ● After the teaching or programming operation, perform the check operation one step by one step and then shift to the automatic operation. ● When the check operation is to be performed inside the safety protection fence, perform the check operation using the previously specified work procedure like the teaching operation. ● Make sure to perform the programmed operation check at the safety speed. Failure to do so may result in an accident due to unexpected motion caused by a program error, etc. ● Do not touch the terminal block or any of the various setting switches in the power ON mode. Failure to do so may result in an electric shock or malfunction.
7	Automatic Operation	● Check before starting the automatic operation or rebooting after operation stop that there is nobody in the safety protection fence. ● Before starting automatic operation, make sure that all peripheral equipment is in an automatic-operation-ready state and there is no alarm indication. ● Make sure to operate automatic operation start from outside of the safety protection fence. ● In the case that there is any abnormal heating, smoke, offensive smell, or abnormal noise in the product, immediately stop the machine and turn OFF the power switch. Failure to do so may result in a fire or damage to the product. ● When a power failure occurs, turn OFF the power switch. Failure to do so may cause an injury or damage to the product, due to a sudden motion of the product in the recovery operation from the power failure.

No.	Operation Description	Description
8	Maintenance and Inspection	● When the work is carried out with 2 or more persons, make it clear who is to be the leader and who to be the follower(s) and communicate well with each other to ensure the safety of the workers. ● Perform the work out of the safety protection fence, if possible. In the case that the operation is to be performed unavoidably inside the safety protection fence, prepare the “Stipulations for the Operation” and make sure that all the workers acknowledge and understand them well. ● When the work is to be performed inside the safety protection fence, basically turn OFF the power switch. ● When the operation is to be performed inside the safety protection fence, the worker should have an emergency stop switch at hand with him so that the unit can be stopped any time in an emergency. ● When the operation is to be performed inside the safety protection fence, in addition to the workers, arrange a watchman so that the machine can be stopped any time in an emergency. Also, keep watch on the operation so that any third person can not operate the switches carelessly. ● Place a sign “Under Operation” at the position easy to see. ● For the grease for the guide or ball screw, use appropriate grease according to the Operation Manual for each model. ● Do not perform the dielectric strength test. Failure to do so may result in a damage to the product. ● When releasing the brake on a vertically oriented actuator, exercise precaution not to pinch your hand or damage the work parts with the actuator dropped by gravity. ● The slider or rod may get misaligned OFF the stop position if the servo is turned OFF. Be careful not to get injured or damaged due to an unnecessary operation. ● Pay attention not to lose the cover or untightened screws, and make sure to put the product back to the original condition after maintenance and inspection works. Use in incomplete condition may cause damage to the product or an injury. * Safety protection Fence : In the case that there is no safety protection fence, the movable range should be indicated.
9	Modification and Dismantle	● Do not modify, disassemble, assemble or use of maintenance parts not specified based at your own discretion.
10	Disposal	● When the product becomes no longer usable or necessary, dispose of it properly as an industrial waste. ● When removing the actuator for disposal, pay attention to drop of components when detaching screws. ● Do not put the product in a fire when disposing of it. The product may burst or generate toxic gases.
11	Other	● Do not come close to the product or the harnesses if you are a person who requires a support of medical devices such as a pacemaker. Doing so may affect the performance of your medical device. ● See Overseas Specifications Compliance Manual to check whether complies if necessary. ● For the handling of actuators and controllers, follow the dedicated operation manual of each unit to ensure the safety.

Alert Indication

The safety precautions are divided into “Danger”, “Warning”, “Caution” and “Notice” according to the warning level, as follows, and described in the operation Manual for each model.

Level	Degree of Danger and Damage	Symbol
Danger	This indicates an imminently hazardous situation which, if the product is not handled correctly, will result in death or serious injury.	Danger
Warning	This indicates a potentially hazardous situation which, if the product is not handled correctly, could result in death or serious injury.	Warning
Caution	This indicates a potentially hazardous situation which, if the product is not handled correctly, may result in minor injury or property damage.	Caution
Notice	This indicates lower possibility for the injury, but should be kept to use this product properly.	Notice

Handling Precautions

1. Positioning Repeatability Does Not Change Even If the Positioning Band is Changed.

Positioning repeatability does not change even if the positioning band is changed.
If the positioning band is narrower than the default value, the positioning repeatability does not change, but the time it takes for the positioning complete signal to be output takes longer. The execution of next operation instruction (e.g., MOVP, MOVL) is delayed and, as a result, the tact time of the entire cycle may be delayed.

2. Make sure to attach the Horizontal Articulated Robot properly by following this operation manual.

Using the product with the Horizontal Articulated Robot not being certainly retained or affixed may cause abnormal noise, vibration, malfunction or shorten the product life.

3. Handling of the Carton

Each robot is packed with a controller prior to shipment.
When transporting the carton containing the robot and controller, observe the following items and be careful not to drop the carton or apply impact due to forcible contact:

- If the carton is heavy, one operator should not attempt to carry it alone.
- Place the carton on a level surface if it is to be left there for a while.
- Do not climb upon the carton.
- Do not place on the carton any heavy object that may cause the carton to deform, or an article whose shape allows a load to be concentrated at one point.

[Carton]

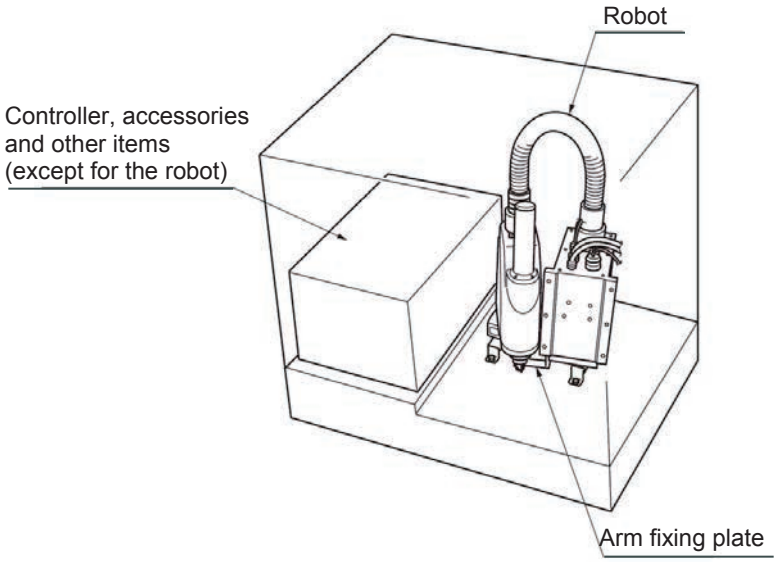

⚠ Warning **⚠ Caution**

- The robot and controller are very heavy. When transporting the carton containing the robot and controller, handle it with extra care so as not to drop the carton or apply impact due to forcible contact, as it may cause injury or damage to the robot or controller.
- Serious injury may result if the carton is dropped onto a person during transportation.
- Never stand below the carton as it is hoisted.
- Use a carrier device with sufficient loading capacity.
- If a machine or method is used that requires specified skills, it must be operated/performed by a person having the proper qualifications.

4. Handling of Individual Components

The robot and controller are supplied as a set.
Your robot cannot be used with the controller supplied with another robot.
When handling multiple robots, check that the serial number described on the robot is the same as the one on the controller and be careful not to switch the controllers.

The robot will not stand on its own after being unloaded from the carton pallet.
Hold it by hand, or place a cushioning material on the floor and place the robot on its side upon the cushion.

5. Transportation

When transporting the robot, loop the cables around the upper part of the robot using adhesive tape, etc., and transport the robot with the supplied arm locking plates and arm support plates securely fixed.
Use a dolly, forklift, etc., to transport the robot.

When transporting the robot, move the robot slowly by paying attention to the balance of the robot and being careful not to apply vibration or shock.

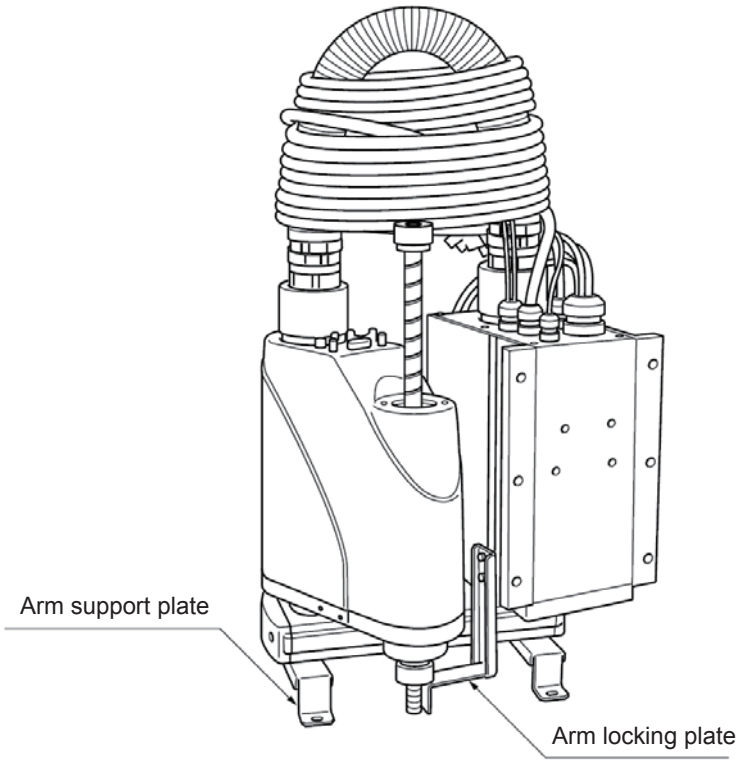

⚠ Danger **⚠ Warning**

- It is dangerous not to fix the arms and table securely because any free arm may turn suddenly and pinch your hand or the cables may be dragged and catch your feet.
- Do not attempt to transport or move the robot by directly carrying it, because you may hurt your back or drop the robot onto your feet.
- If the robot drops you may be pinned down and sustain serious injury.
- Never stand underneath the robot while it is transported.
- If any machine or means is used that requires a specified qualification, it must be operated by a person having the required qualification.

International Standards Compliances

This actuator complies with the following overseas standard.
Refer to Overseas Standard Compliance Manual (ME0287) for more detailed information.

RoHS Directive	CE Marking
○	○

1. Name of Each Part

1.1 Robot

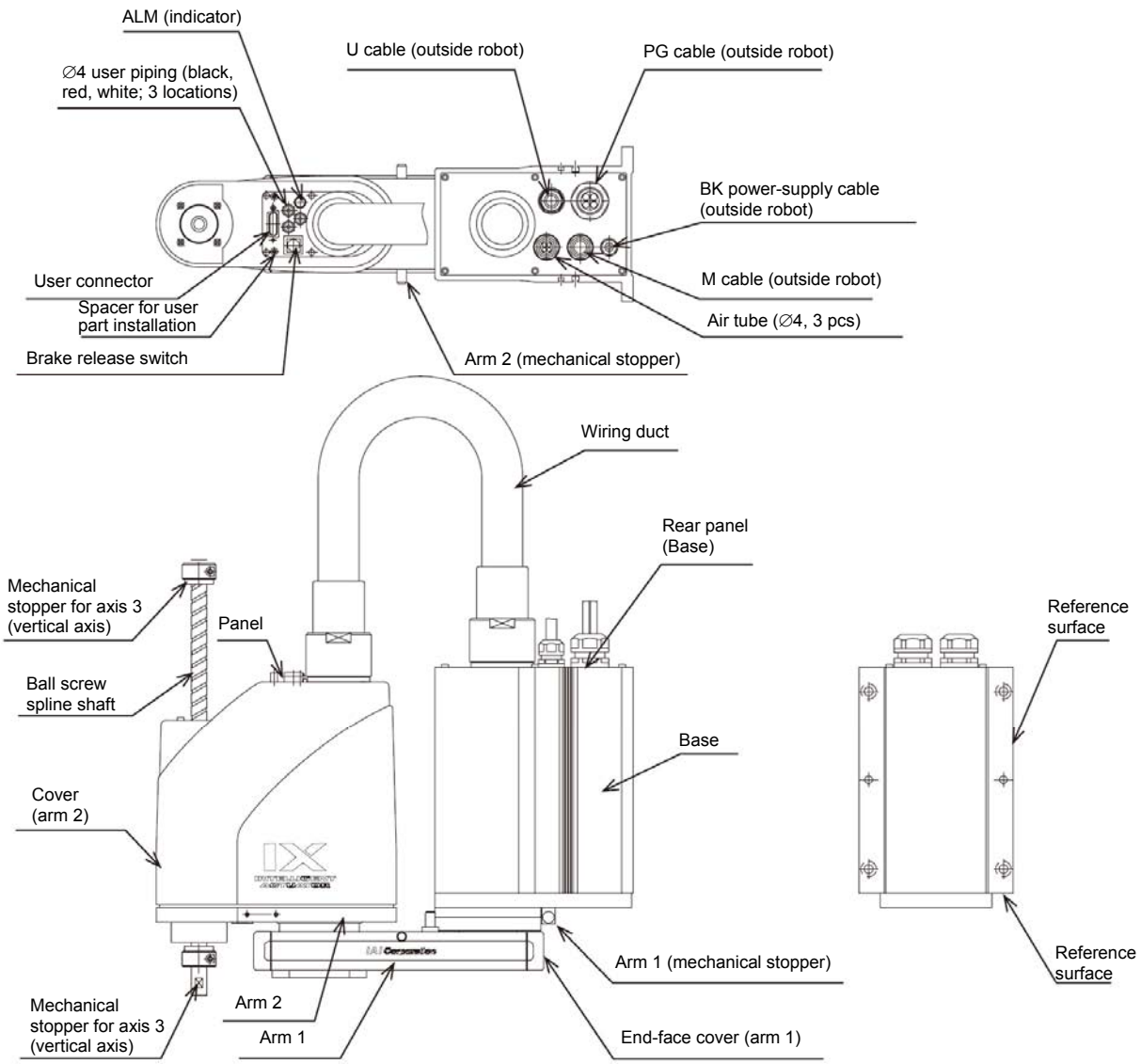

1.2 Labels

The following labels are attached on the robot and controller. Be sure to observe the instructions and cautions written on the labels to ensure the correct use of the robot/controller.

(1) Labels on the Robot

Prohibition of entry into the operation area

Warning on handling of the vertical axis

Warning against electric shock

Robot serial number

CE-certified robot
(Provided only for CE-certified models)

(2) Labels on the Controller

Caution/warning on handling of the controller

Designation of the connected robot

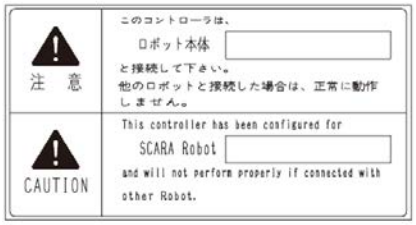

Controller serial number
(Other than CE-certified models)

Controller serial number
(CE-certified models)

⚠ **Danger** ⚠ **Warning** ⚠ **Caution**

- Failure to observe the cautionary information provided on the labels may result in serious injury or damage to the robot.

1.3 Label Positions

Label Positions on the Robot

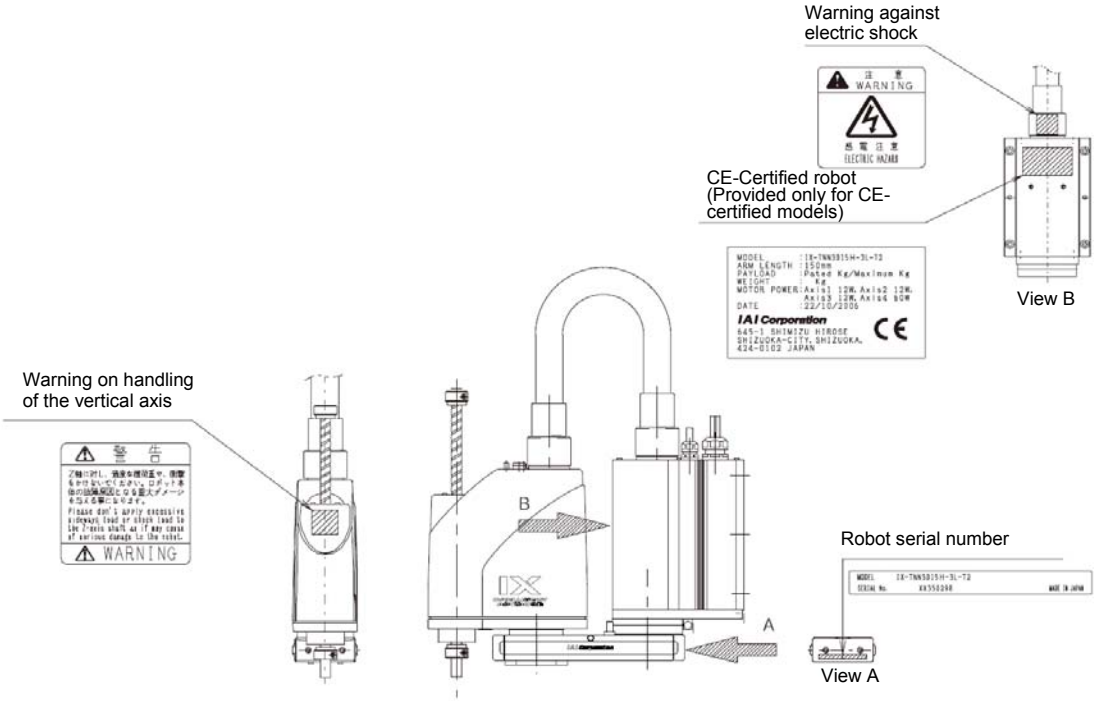

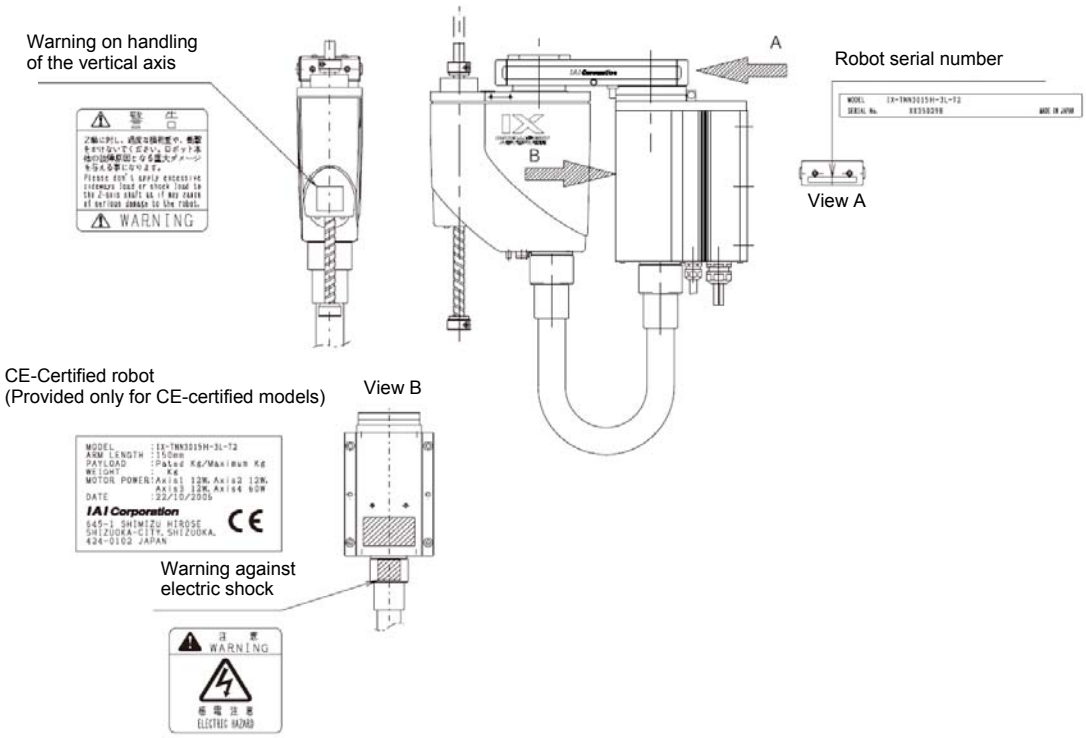

Label Positions on the Controller

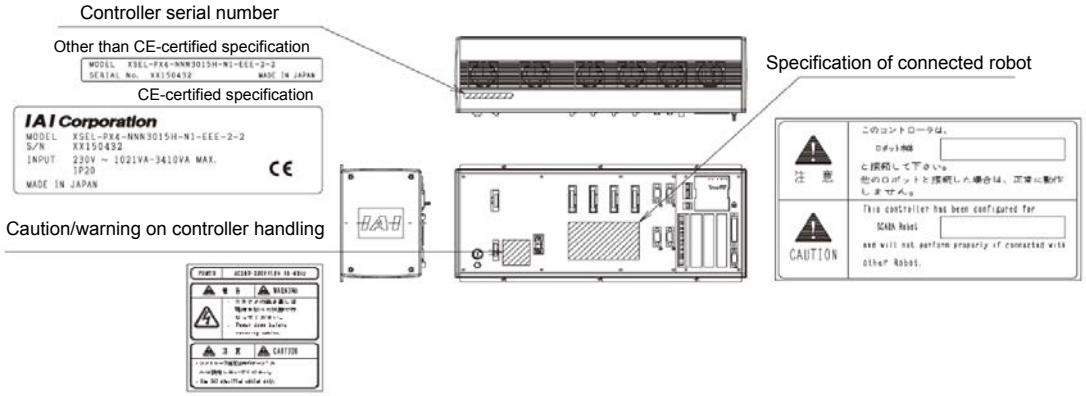

2. External Dimensions

IX-TNN3015H (Arm Length 300)

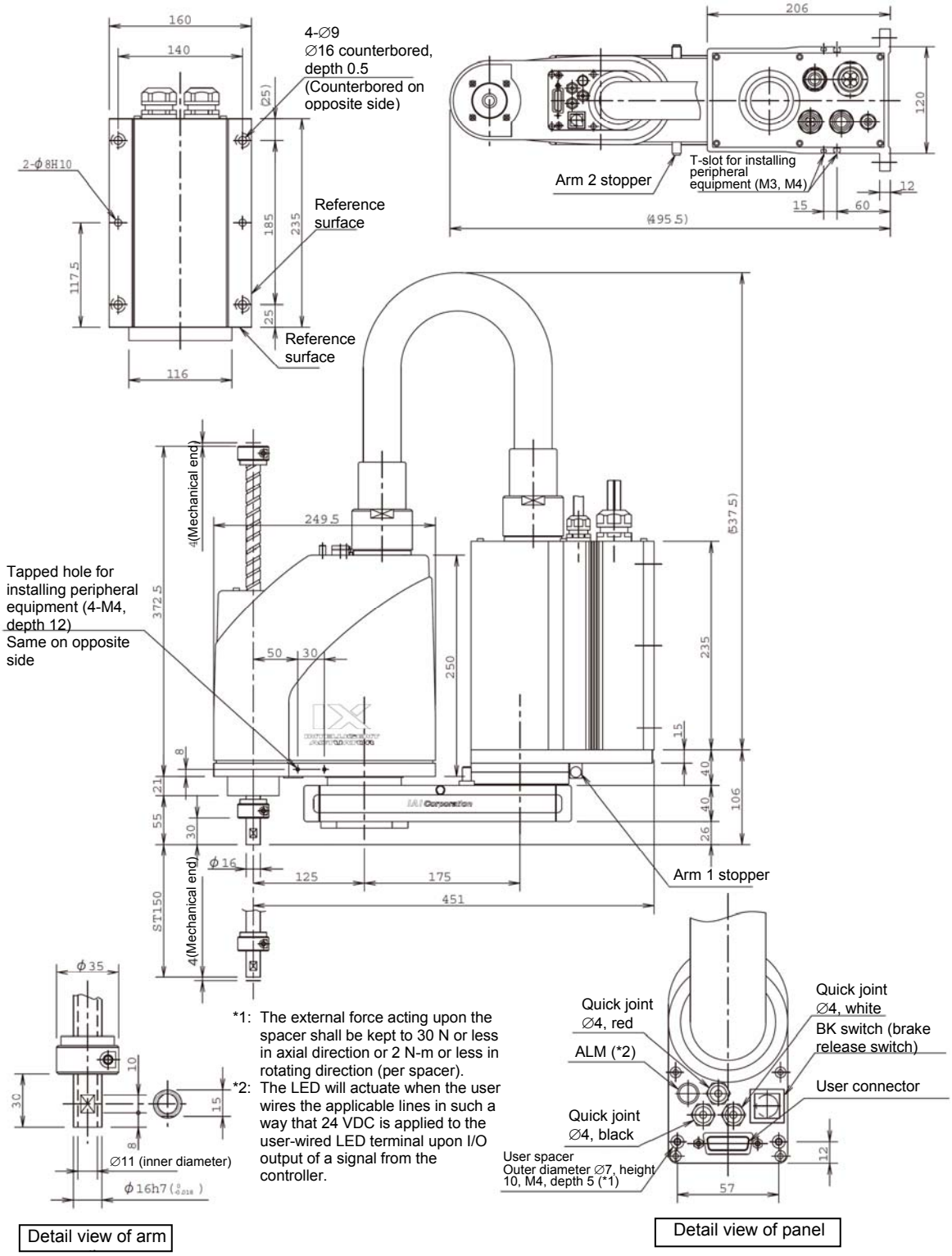

*1: The external force acting upon the spacer shall be kept to 30 N or less in axial direction or 2 N-m or less in rotating direction (per spacer).

*2: The LED will actuate when the user wires the applicable lines in such a way that 24 VDC is applied to the user-wired LED terminal upon I/O output of a signal from the controller.

IX-TNN3515H (Arm Length 350)

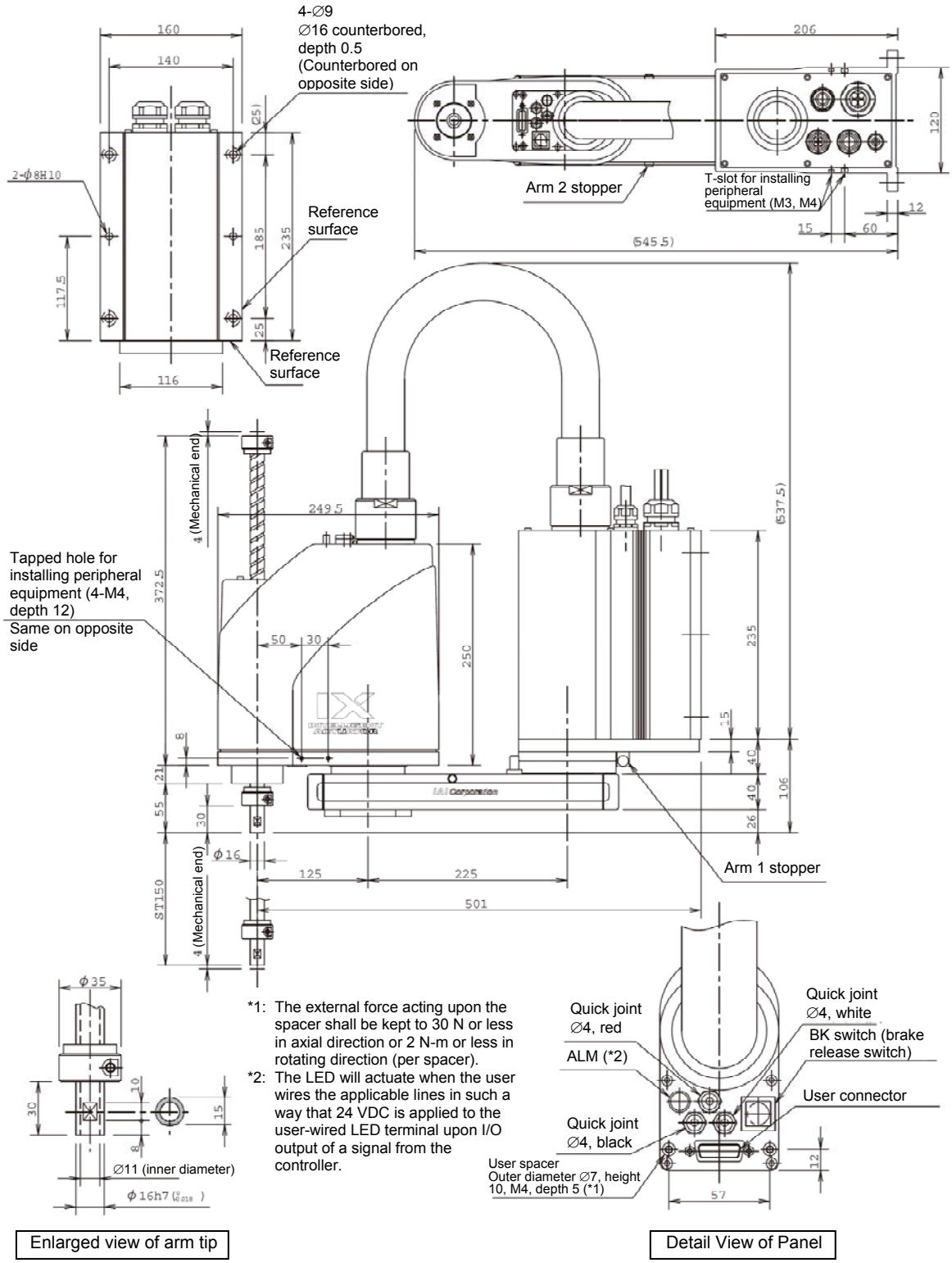

Enlarged view of arm tip

Detail View of Panel

IX-UNN3015H (Arm Length 300)

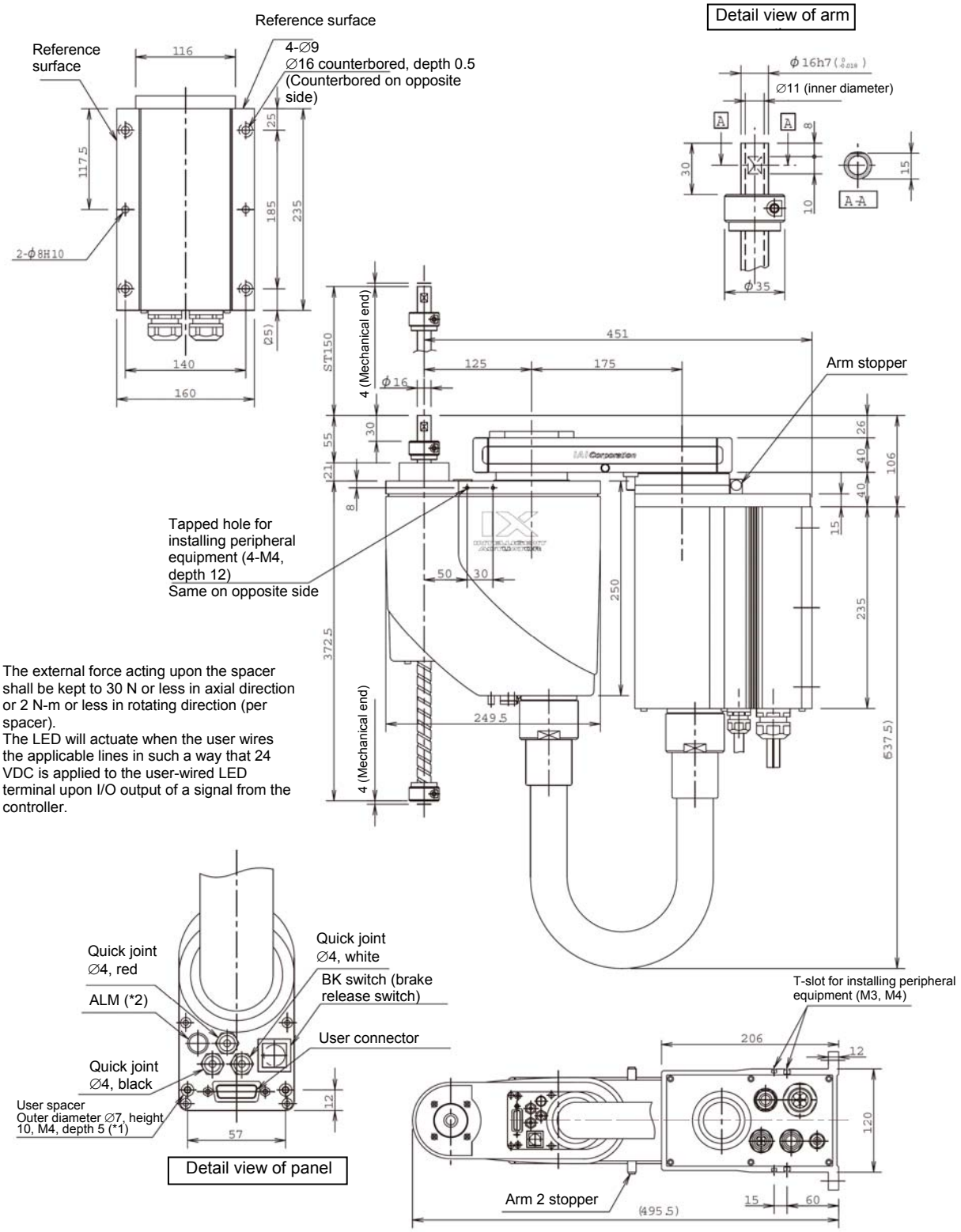

*1: The external force acting upon the spacer shall be kept to 30 N or less in axial direction or 2 N-m or less in rotating direction (per spacer).

*2: The LED will actuate when the user wires the applicable lines in such a way that 24 VDC is applied to the user-wired LED terminal upon I/O output of a signal from the controller.

IX-UNN3015H (Arm Length 350)

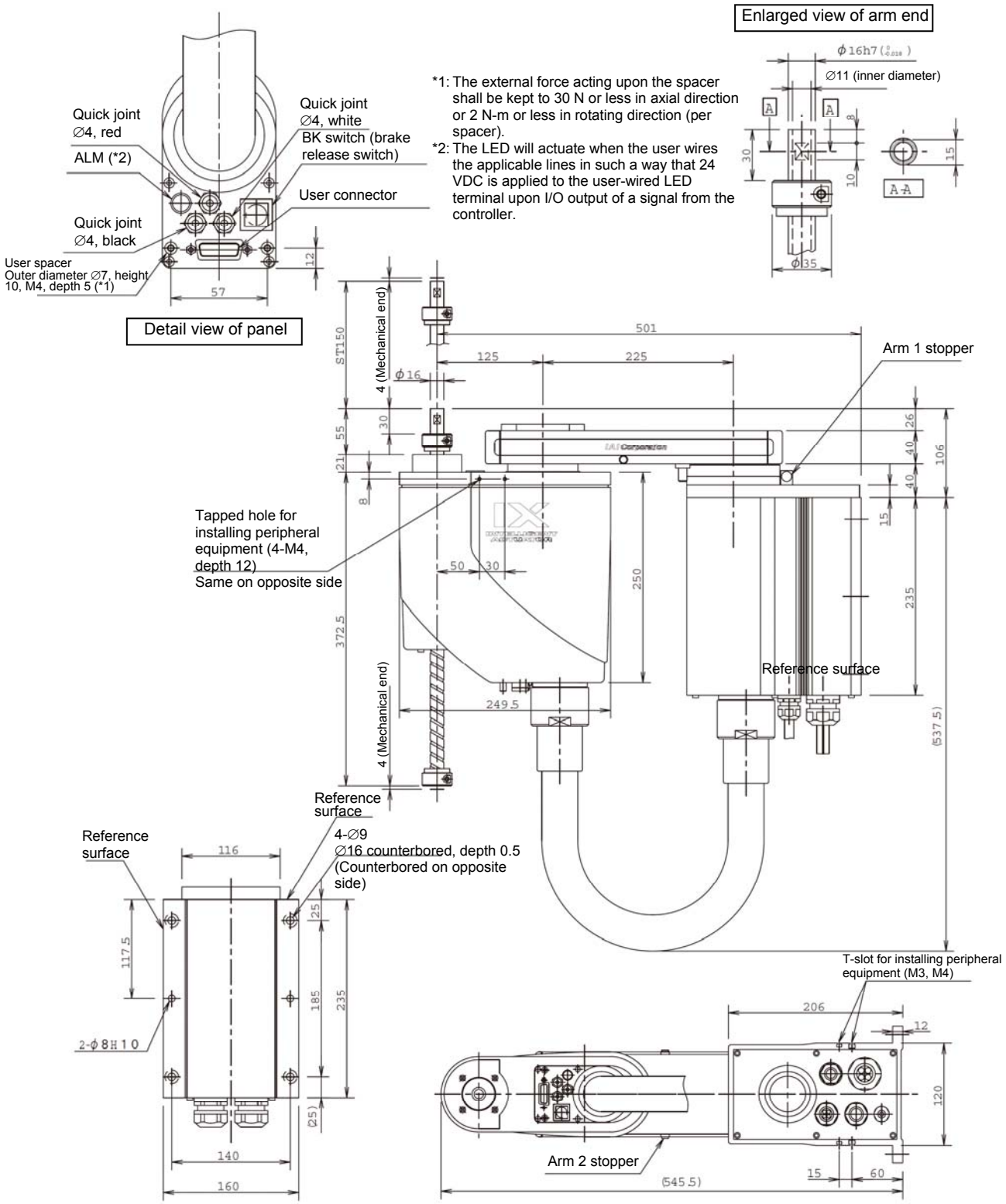

3 Robot Operation Area

IX-TNN3015H, IX-UNN3015H

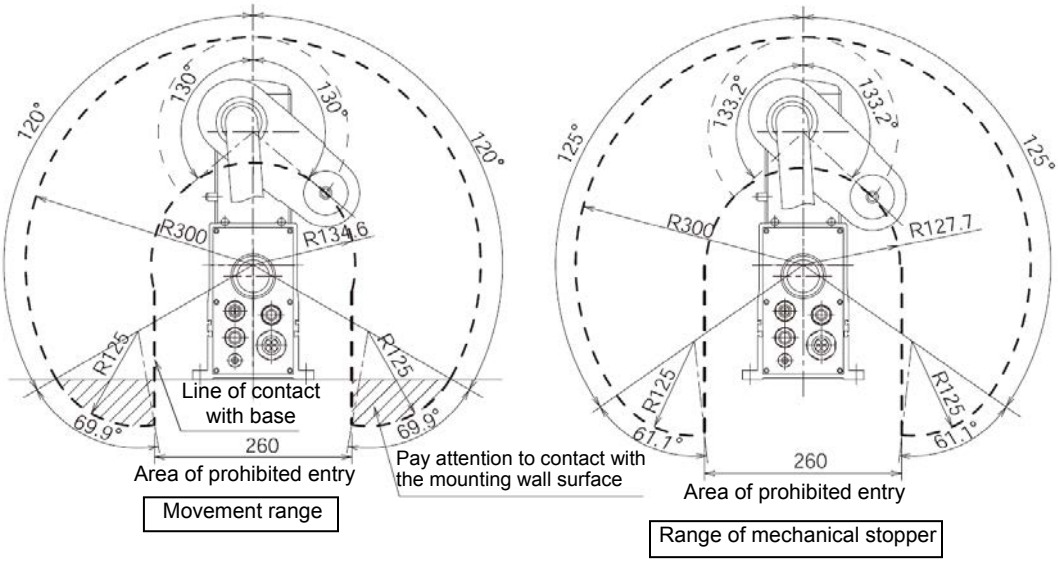

IX-TNN3515H, IX-UNN3515H

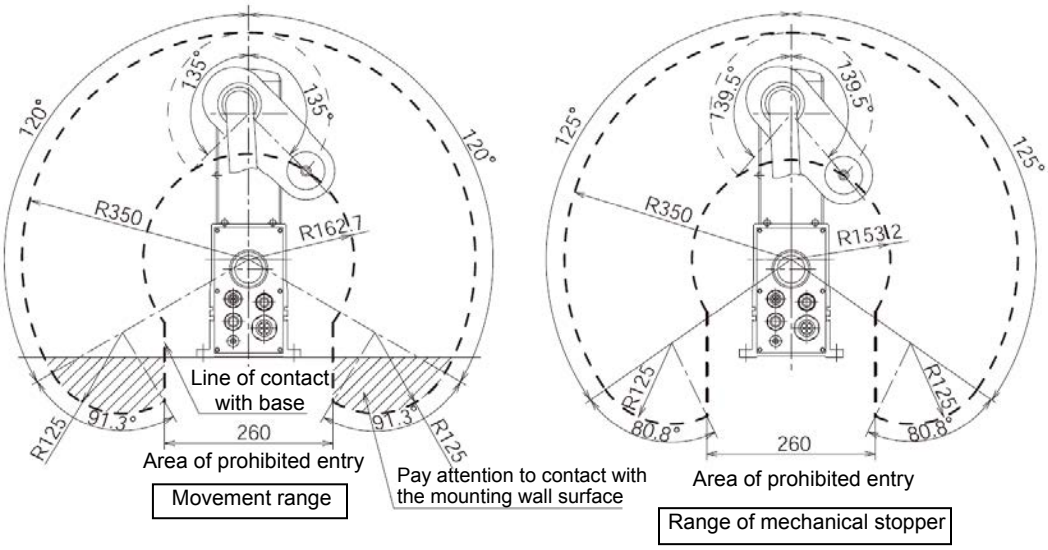

4 Wiring Diagram

4.1 Layout Drawing

Wiring/Piping Diagram: 300/350

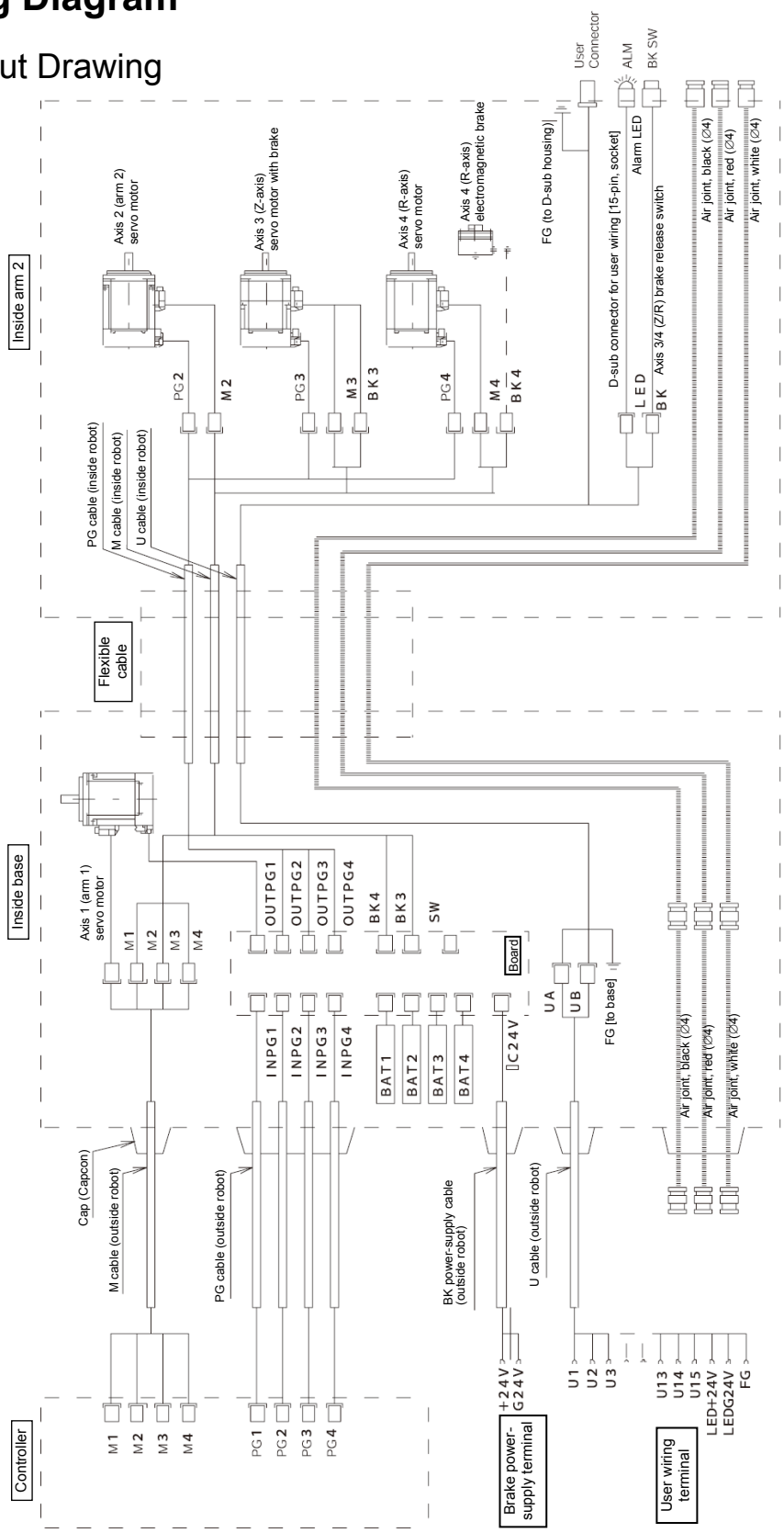

Notes
(1) The actual positions of board connectors vary from this drawing.
(2) The brake power-supply circuit is provided on the primary side (high-pressure side), so a dedicated 24-V power supply is required. The 24-V power supply for I/O or any other power supply used on the secondary side (low-pressure side) cannot be used.
(3) To operate the alarm LED, the user must provide a circuit that uses the controller I/O output signal.

4.2 230 V Circuit Components

No.	Code name	Model number	Manufacturer	Remarks
1	Axis 1 servo motor	TS4607 N2027 E201	Tamagawa Seiki	AC servo motor, ☐ 60, 200 W, key groove, CE certified
2	Axis 2 servo motor	TS4606 N2044 E201		AC servo motor, ☐ 60, 100 W, key groove, CE certified
3	Axis 3 servo motor w/ brake	TS4606 N7044 E201		AC servo motor, ☐ 60, 100 W, w/ brake, round shaft, CE certified
4	Axis 4 servo motor	TS4602 N2044 E201		AC servo motor, ☐ 40, 50 W, key groove, CE certified
5	M cable (inside robot)		IAI	Wire: 300 V, 105°C (rated), AWG18 (0.84 mm^2), flexible cable, UL VW-1, c-UL FT-1
6	M cable (outside robot)		IAI	Wire: 300 V, 80°C (rated), AWG18 (0.89 mm^2), oil-resistant cable, UL VW-1, c-UL FT-1

5. Option

5.1 Absolute Reset Jig

This jig is used to perform an absolute reset in the event that absolute data in the encoder was lost.

Model number	Remarks
JG-2	For arm length 250/350

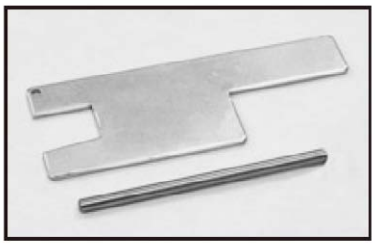

JG-2

5.2 Flange

This flange is used to install a load at the end of the Z-axis arm.

Model number	Remarks
IX-FL-2	For arm length 250/350

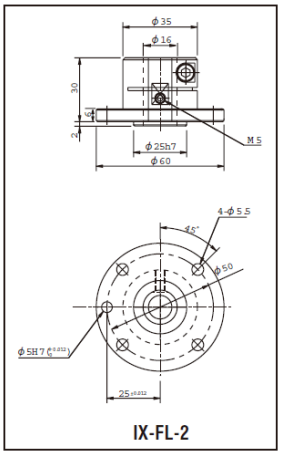

IX-FL-2

5.3 Absolute Data Backup Battery

This battery is used to retain absolute data in the encoder. (Set the battery inside the cover of the SCARA robot.)

Model number	Remarks
AB-3	For arm length 250 ~ 800

* Four batteries are needed for each robot (all SCARA robot models). Since AB-3 batteries are packed individually, specify the required number in your order.

AB-3

5.4 Cable Joint Type (Model: JY)

Motor cable, encoder cable, user cable and brake cable can be disconnected.
The cables to connect with the actuator cable out of the body for approx. 30cm are 5.4.1 to 5.4.4 below.

5.4.1 Motor Cable

Connect between the four motor cables out of body for approx. 30cm and the controller with the four motor cables.

Model: CB-X-MA050 or CB-X-MA100
Length L: 5m in case cable length in model code is 5L
10m in case cable length in model code is 10L

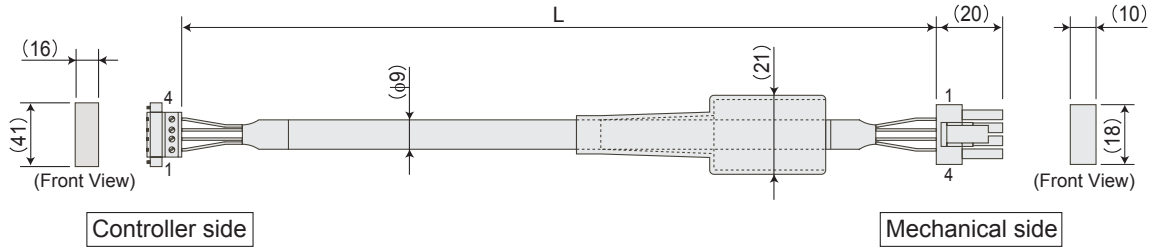

Conection Diagram

Controller side

Width	Electric wire color	Signal name	Pin No.
0.75sq	Green	PE	1
	Red	U	2
	White	V	3
	Black	W	4

Actuator side (mechanical side)

Pin No.	Signal name	Electric wire color	Width
1	U	Red	0.75sq
2	V	White	
3	W	Black	
4	PE	Green	

5.4.2 Encoder Cable

Connect between the four motor cables out of body for approx. 30cm and the controller with the four motor cables.

Model: CB−X1-PA050 or CB-X1-PA100
Length L: 5m in case cable length in model code is 5L
10m in case cable length in model code is 10L

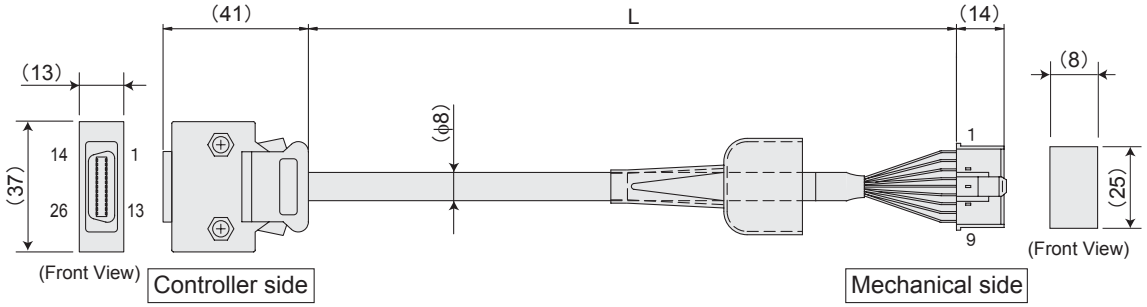

Conection Diagram

Controller side

Width	Electric wire color	Signal name	Pin No.
AWG26	—	—	10
AWG26	—	—	11
AWG26	—	E24V	12
AWG26	—	0V	26
AWG26	—	LS	25
AWG26	—	CLEEP	24
AWG26	—	OT	23
AWG26	—	RSV	9
AWG26	—	—	18
AWG26	—	—	19
AWG26	—	A+	1
AWG26	—	A-	2
AWG26	—	B+	3
AWG26	—	B-	4
AWG26	—	Z+	5
AWG26	—	Z-	6
AWG26	Orange	SRD+	7
AWG26	Green	SRD-	8
AWG26	Purple	BAT+	14
AWG26	Gray	BAT-	15
AWG26	Red	Vcc	16
AWG26	Black	GND	17
AWG26	Blue	BKR-	20
AWG26	Yellow	BKR+	21
AWG26	—	—	22
Clamping connection to shield or hood			

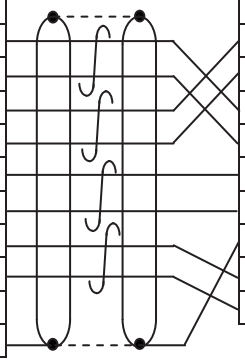

Actuator side (mechanical side)

Pin No.	Signal name	Electric wire color	Width
1	BAT+	Black	AWG26
2	BAT-	Yellow	AWG26
3	SD	Blue	AWG26
4	SD	Orange	AWG26
5	Vcc	Green	AWG26
6	GND	Brown	AWG26
7	FG	Drain	AWG26
8	BK-	Gray	AWG26
9	BK+	Red	AWG26

5.4.3 User Cable

Model: CB−IX-USR050-CS2 or CB-IX-USR100-CS2
Length L: 5m in case cable length in model code is 5L
10m in case cable length in model code is 10L

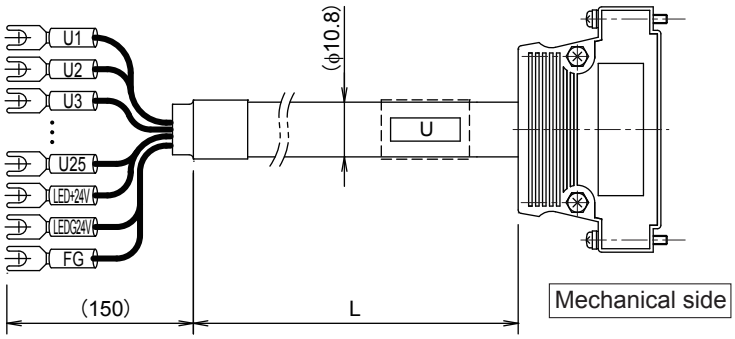

Conection Diagram

Width	Electric wire color	Signal name	Pin No.
AWG26	1B/Sky Blue	U1	1
AWG26	1R/Sky Blue	U2	2
AWG26	1B/Pink	U3	3
AWG26	1R/Pink	U4	4
AWG26	1B/Light Green	U5	5
AWG26	1R/Light Green	U6	6
AWG26	1B/Orange	U7	7
AWG26	1R/Orange	U8	8
AWG26	1B/Gray	U9	9
AWG26	1R/Gray	U10	10
AWG26	2B/Sky Blue	U11	11
AWG26	2R/Sky Blue	U12	12
AWG26	2B/Pink	U13	13
AWG26	2R/Pink	U14	14
AWG26	2B/Light Green	U15	15
AWG26	2R/Light Green	U16	16
AWG26	2B/Orange	U17	17
AWG26	2R/Orange	U18	18
AWG26	2B/Gray	U19	19
AWG26	2R/Gray	U20	20
AWG26	3B/Sky Blue	U21	21
AWG26	3R/Sky Blue	U22	22
AWG26	3B/Pink	U23	23
AWG26	3R/Pink	U24	24
AWG26	3B/Light Green	U25	25
AWG26	3R/Light Green	LED+24V	36
AWG26	3B/Orange	LEDG24V	37
FG	Green	FG	−

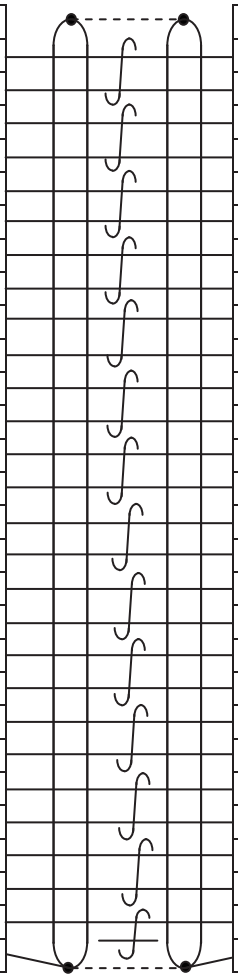

Actuator side (mechanical side)

Pin No.	Signal name	Electric wire color	Width
1	U1	1B/Sky Blue	AWG26
2	U2	1R/Sky Blue	AWG26
3	U3	1B/Pink	AWG26
4	U4	1R/Pink	AWG26
5	U5	1B/Light Green	AWG26
6	U6	1R/Light Green	AWG26
7	U7	1B/Orange	AWG26
8	U8	1R/Orange	AWG26
9	U9	1B/Gray	AWG26
10	U10	1R/Gray	AWG26
11	U11	2B/Sky Blue	AWG26
12	U12	2R/Sky Blue	AWG26
13	U13	2B/Pink	AWG26
14	U14	2R/Pink	AWG26
15	U15	2B/Light Green	AWG26
16	U16	2R/Light Green	AWG26
17	U17	2B/Orange	AWG26
18	U18	2R/Orange	AWG26
19	U19	2B/Gray	AWG26
20	U20	2R/Gray	AWG26
21	U21	3B/Sky Blue	AWG26
22	U22	3R/Sky Blue	AWG26
23	U23	3B/Pink	AWG26
24	U24	3R/Pink	AWG26
25	U25	3B/Light Green	AWG26
36	LED+24V	3R/Light Green	AWG26
37	LEDG24V	3B/Orange	AWG26
Clamping connection to braid or hood			

5.4.4 Brake Cable

Model: CB−IX-BK050-CS2 or CB-IX-BK100-CS2
Length L: 5m in case cable length in model code is 5L
10m in case cable length in model code is 10L

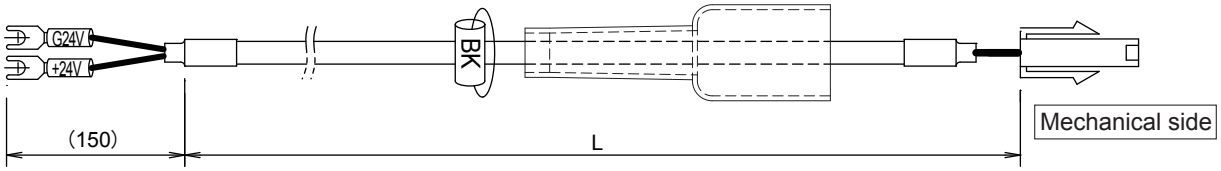

Conection Diagram

Width	Electric wire color	Signal name	Pin No.
AWG24	Sky Blue	G24V	1
AWG24	Pink	+24V	2

Actuator side (mechanical side)

Pin No.	Signal name	Electric wire color	Width
1	G24V	Sky Blue	AWG24
2	+24V	Pink	AWG24

6. Checking after Unpacking

After unpacking the carton, check the condition of the product and items included in the carton.

6.1 Items Included in the Carton

No.	Item	Model number	Remarks
1	Robot	Refer to "How to Read Model Nameplate" and "How to Read Model Number."	
2	Controller		
Accessories			
3	Eye-bolt		
4	D-sub connector (XMA3 Plug, Solder Cup Terminal)	XM3A-1521 (Omron)	
5	Hood set (for D-sub connector) (XM2S Hood)	XM2S-1511 (Omron)	
6	Danger label		
7	Positioning sticker		
8	PIO flat cable	CB-X-PIO□□□	□□□ indicates the cable length
9	First step-by-step guide		
10	Operation manual (CD/DVD)		
11	Safety guide		

6.2 Operation Manuals Relating to This Product

No.	Item	Control No.
1	Operation Manual for XSEL-PX/QX Controller	ME0152
2	Operation Manual for XSEL-R/S/RX/SX/RXD/SXD Controller	ME0313
3	Operation Manual for XSEL Controller P/Q/PX/QX – RC Gateway Function	ME0188
4	Operation Manual for PC Software IA-101-X-MW/IA-101-X-USBMW	ME0154
5	Operation Manual for Teaching Pendant SEL-T/TD/TG	ME0183
6	Operation Manual for Teaching Pendant IA-T-X/XD	ME0160
7	Operation Manual for DeviceNet	ME0124
8	Operation Manual for CC-Link	ME0123
9	Operation Manual for PROFIBUS	ME0153
10	Operation Manual for X-SEL Ethernet	ME0140
11	Operation Manual for Multi-point I/O Board	ME0138
12	Operation Manual for Dedicated Terminal Block for Multi-point I/O Board	ME0139
13	Operation Manual for IA Net	ME0307

6.3 How to Read Model Nameplate

6.4 How to Read Model Number

IX-TNN3015H-5L-T2-JY-**

<Series>
SCARA robot

<Type>
Wall mount type
Arm length 300 mm/Z-axis 150 mm
TNN3015H
Arm length 350 mm/Z-axis 150 mm
TNN3515H

Wall mount inverse type
Arm length 300 mm/Z-axis 150 mm
UNN3015H
Arm length 350 mm/Z-axis 150 mm
UNN3515H

<Cable length>
5L: 5 m
10L: 10 m

<Applicable controller>
T2: XSEL-PX/QX

<Option>
JY: Joint cable specification

Identification for IAI use only(Note 1)

Note 1 This may be displayed for the manufacturing reason.
(This is not to indicate the manufacturing model code.)

7. Specifications

7.1 IX-TNN3015H, IX-UNN3015H

IX-TNN3015H (arm length 300, wall mount), IX-UNN3015H (arm length 300, inverse)

Item			Specifications
Model number			IX-TNN3015H-**L-T1/IX-UNN3015H-**L-T1
Degree of freedom			Four degrees of freedom
Overall arm length		mm	300
Arm 1 length		mm	175
Arm 2 length		mm	125
Drive method	Axis 1 (arm 1)		AC servo motor + Speed reducer
	Axis 2 (arm 2)		AC servo motor + Speed reducer
	Axis 3 (vertical axis)		AC servo motor with brake + Belt + Ball-screw spline
	Axis 4 (rotational axis)		AC servo motor + Belt + Reduction gear + Spline
Motor capacity	Axis 1 (arm 1)	W	200
	Axis 2 (arm 2)	W	100
	Axis 3 (vertical axis)	W	100
	Axis 4 (rotational axis)	W	50
Movement range	Axis 1 (arm 1)	degree	±120
	Axis 2 (arm 2)	degree	±130
	Axis 3 (vertical axis) (*1)	mm	150
	Axis 4 (rotational axis)	degree	±360
Maximum operating speed (*2)	Axis 1 + Axis 2 (maximum composite speed)	mm/sec	3616
	Axis 3 (vertical axis)	mm/sec	1316
	Axis 4 (rotational axis)	degree/sec	1600
Positioning repeatability precision (*3)	Axis 1 + Axis 2	mm	±0.010
	Axis 3 (vertical axis)	mm	±0.010
	Axis 4 (rotational axis)	degree	±0.005
Cycle time (*4)		sec	0.41
Load capacity	Rated	kg	1
	Maximum	kg	3
Axis 3 (vertical axis) Push force control range	Upper limit (*5)	N (kgf)	110.6 (11.2) Push torque limit 70%
	Lower limit (*6)	N (kgf)	21.0 (2.1) Push torque limit 20%
Permissible load on axis 4	Permissible moment of inertia (*7)	kg-m^2	0.015
	Permissible torque	N-m (kgf-cm)	1.9 (19.5)
Permissible tool diameter (*6)		mm	40
Home detection			Absolute
User wiring			D-sub 15-pin connector with 15-core AWG26 shielded cable (socket)
Alarm indicator (*8)			One small, red LED indicator (rated voltage: 24 V)
User piping			Three air tubes (outer diameter: ϕ 4, inner diameter: ϕ 2.5) (normal service pressure: 0.8 MPa)

Item			Specifications
Operating environment	Surrounding air temperature/humidity		Temperature: 0 to 40°C, humidity: 20 to 85%RH or less (non-condensing)
	Altitude	m	1,000 or less
Noise		dB	71
Robot weight		kg	20.8
Brake power source for main unit		W	DC24VI10% 20W
Controller	Power supply		230 V 50/60 Hz 5 A
	Allowable supply voltage fluctuation	%	±10
	Overvoltage category (IEC60664-1)		Category III
	Pollution degree (IEC60664-1)		Pollution degree 3

*1: To move the robot horizontally at high speed, perform teaching so that the vertical axis stays as close to the top position as possible. (Fig. 1)
To operate the robot with its vertical axis at the bottom position, the speed and acceleration must be reduced as appropriate. (Fig. 2)

*2: Assuming PTP instruction operation. The maximum composite speed is not the maximum speed of CP operation.

*3: Positioning precision when the robot is operated repeatedly to one specified position from the same starting position at the same speed and acceleration/deceleration using the same arm (at a constant surrounding air temperature of 20°C). Take note that this is not the absolute positioning precision.
Also note that the positioning repeatability may deviate from the specified value if the arm is changed, positioning is performed to one specified position from multiple positions, or any of the operating conditions such as operating speed and acceleration/deceleration setting is changed.

*4: Measured when the robot is operated at the maximum speed, carrying a load of 2 kg.

*5: Push force when driver card parameter No. 38, “Push torque limit during positioning” is set to 70%.

*6: Push force when driver card parameter No. 38, “Push torque limit during positioning” is set to 20%.
Although this parameter can be set to a desired value from 15 to 70%, push force will not stabilize if the set value is outside the range of 20 to 70%.

*7: The permissible moment of inertia converted to a value at the rotational center of axis 4. The offset from the rotational center of axis 4 to the tool’s center of gravity is assumed to be 40 mm or less. (Fig. 3)
If the tool’s center of gravity is further away from the rotational center of axis 4, the speed and acceleration must be reduced as appropriate.

*8: To enable the alarm LED indicator, the user must provide a circuit that supplies 24 VDC to the LED terminal in the user connector in response to the controller I/O output signal, etc.

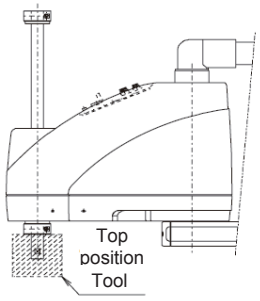

(Fig. 1)

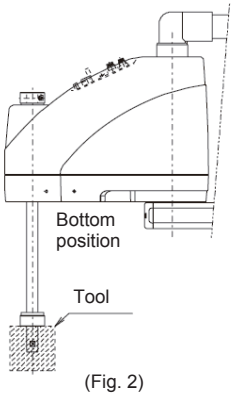

(Fig. 2)

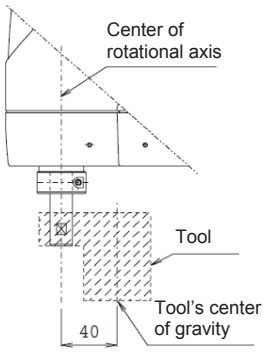

(Fig. 3)

Reference design standards: Annex I to Machine Directives, EN292-1, EN292-2, EN1050, EN60204-1, EN775

7.2 IX-TNN3515H, IX-UNN3515H

IX-TNN3515H (arm length 350, wall mount), IX-UNN3515H (arm length 350, inverse)

Item			Specifications
Model number			IX-TNN3515H-**L-T1/IX-UNN3515H-**L-T1
Degree of freedom			Four degrees of freedom
Overall arm length		mm	350
Arm 1 length		mm	225
Arm 2 length		mm	125
Drive method	Axis 1 (arm 1)		AC servo motor + Speed reducer
	Axis 2 (arm 2)		AC servo motor + Speed reducer
	Axis 3 (vertical axis)		AC servo motor with brake + Belt + Ball-screw spline
	Axis 4 (rotational axis)		AC servo motor + Belt + Reduction gear + Spline
Motor capacity	Axis 1 (arm 1)	W	200
	Axis 2 (arm 2)	W	100
	Axis 3 (vertical axis)	W	100
	Axis 4 (rotational axis)	W	50
Movement range	Axis 1 (arm 1)	degree	±120
	Axis 2 (arm 2)	degree	±135
	Axis 3 (vertical axis) (*1)	mm	150
	Axis 4 (rotational axis)	degree	±360
Maximum operating speed (*2)	Axis 1 + Axis 2 (maximum composite speed)	mm/sec	4042
	Axis 3 (vertical axis)	mm/sec	1316
	Axis 4 (rotational axis)	degree/sec	1600
Positioning repeatability (*3)	Axis 1 + Axis 2	mm	±0.010
	Axis 3 (vertical axis)	mm	±0.010
	Axis 4 (rotational axis)	degree	±0.005
Cycle time (*4)		sec	0.42
Load capacity	Rated	kg	1
	Maximum	kg	3
Axis 3 (vertical axis) Push force control range	Upper limit (*5)	N (kgf)	110.6 (11.2) Push torque limit 70%
	Lower limit (*6)	N (kgf)	21.0 (2.1) Push torque limit 20%
Permissible load on axis 4	Permissible moment of inertia (*7)	kg-m^2	0.015
	Permissible torque	N-m (kgf-cm)	1.9 (19.5)
Permissible tool diameter (*6)		mm	40
Home detection			Absolute
User wiring			D-sub 15-pin connector with 15-core AWG26 shielded cable (socket)
Alarm indicator (*8)			One small, red LED indicator (rated voltage: 24 V)
User piping			Three air tubes (outer diameter: ϕ 4, inner diameter: ϕ 2.5) (normal service pressure: 0.8 MPa)

Item			Specifications
Operating environment	Surrounding air temperature/humidity		Temperature: 0 to 40°C, humidity: 20 to 85%RH or less (non-condensing)
	Altitude	m	1,000 or less
Noise		dB	71
Robot weight		kg	21.9
Brake power source for main unit		W	DC24VI10% 20W
Controller	Power supply		230 V 50/60 Hz 5 A
	Allowable supply voltage fluctuation	%	±10
	Overvoltage category (IEC60664-1)		Category III
	Pollution degree (IEC60664-1)		Pollution degree 3

*1: To move the robot horizontally at high speed, perform teaching so that the vertical axis stays as close to the top position as possible. (Fig. 1)
To operate the robot with its vertical axis at the bottom position, the speed and acceleration must be reduced as appropriate. (Fig. 2)

*2: Assuming PTP instruction operation. The maximum composite speed is not the maximum speed of CP operation.

*3: Positioning precision when the robot is operated repeatedly to one specified position from the same starting position at the same speed and acceleration/deceleration using the same arm (at a constant surrounding air temperature of 20°C). Take note that this is not the absolute positioning precision.
Also note that the positioning repeatability may deviate from the specified value if the arm is changed, positioning is performed to one specified position from multiple positions, or any of the operating conditions such as operating speed and acceleration/deceleration setting is changed.

*4: Measured when the robot is operated at the maximum speed, carrying a load of 2 kg.

*5: Push force when driver card parameter No. 38, “Push torque limit during positioning” is set to 70%.

*6: Push force when driver card parameter No. 38, “Push torque limit during positioning” is set to 20%.
Although this parameter can be set to a desired value from 15 to 70%, push force will not stabilize if the set value is outside the range of 20 to 70%.

*7: The permissible moment of inertia converted to a value at the rotational center of axis 4. The offset from the rotational center of axis 4 to the tool’s center of gravity is assumed to be 40 mm or less. (Fig. 3)
If the tool’s center of gravity is further away from the rotational center of axis 4, the speed and acceleration must be reduced as appropriate.

*8: To enable the alarm LED indicator, the user must provide a circuit that supplies 24 VDC to the LED terminal in the user connector in response to the controller I/O output signal, etc.

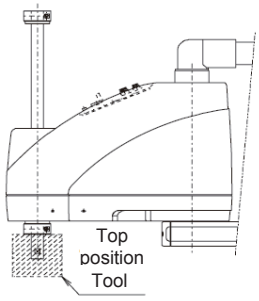

(Fig. 1)

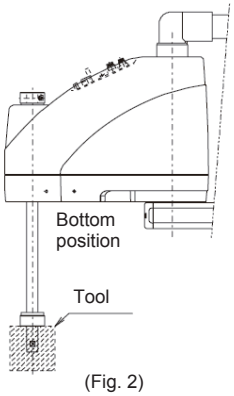

(Fig. 2)

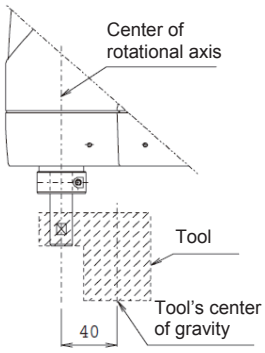

(Fig. 3)

Reference design standards: Annex I to Machine Directives, EN292-1, EN292-2, EN1050, EN60204-1, EN775

8. Installation Environment and Storage/Preservation Environment

8.1 Installation Environment

Install the robot in an environment that satisfies the following conditions:

- Away from direct sunlight
- Not subject to radiated heat from a high-capacity energy source such as a heat-treating furnace
- Surrounding air temperature: 0°C to 40°C
- Humidity: 85% or less (non-condensing)
- Not exposed to corrosive or flammable gases
- Not subject to impact or vibration
- Not exposed to a significant amount of electromagnetic waves, ultraviolet rays or radiation
- Sufficient space is available to ensure safety in teaching and maintenance/inspection operations

Generally, the robot must be installed where the operator need not wear protective gear in order to work.

8.2 Installation Platform

The platform on which to install the robot receives a significant reactive force. Be certain the platform has sufficient rigidity to withstand the anticipated force.

- The surface on which the robot is fixed must have a thickness of 25 mm or more.
  The levelness of the robot installation surface must be at least ±0.05 mm.
- Machine tapped holes of the size shown in the table below in the mounting surface of the platform.

Model number	Tapping size	Remarks
IX-TNN3015H/3515H IX-UNN3015H/3515H	M8	M8: The effective thread shall be 10 mm or more

- The platform must have sufficient rigidity to withstand not only the weight of the robot but also the dynamic moment of inertia that is generated when the robot is operated at maximum speed.
- Secure the platform to the floor or other rigid structure in a manner that prevents any movement due to operation of the robot.
- The installation platform must allow the robot to be mounted on a level surface.

8.3 Storage/Preservation Environment

The storage/preservation environment conforms to the installation environment. If the robot is to be stored/preserved for a prolonged period of time, be sure the robot will not be exposed to dew condensation. Unless otherwise specified, desiccant is not placed in the carton when shipped. If the robot is to be stored/preserved in an environment subject to condensation, provide preventive measures from over the carton or directly to the robot after unpacking.
The maximum storage/preservation temperature is 60°C for a short storage/preservation period. If the robot is to be stored for more than a month, the temperature should not exceed 50°C.

⚠ Danger **⚠ Warning**

- Failure to provide a proper environment for installation and storage/preservation may shorten the service life of the robot, reduce its operation precision, or cause a malfunction or failure.
- Never use the robot in a flammable atmosphere. The robot may explode or ignite.

9. How to Install

Shown below is how to install SCARA Robot.

9.1 Installation Posture

○ : Available ×: Not available

Horizontally Oriented Mount	Wall-Mount	Ceiling-Mount
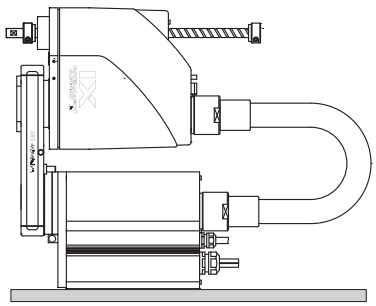	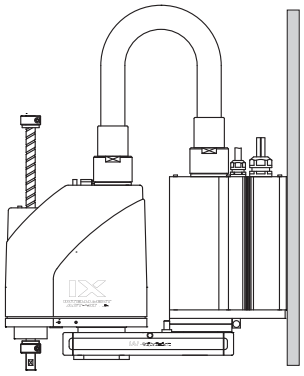	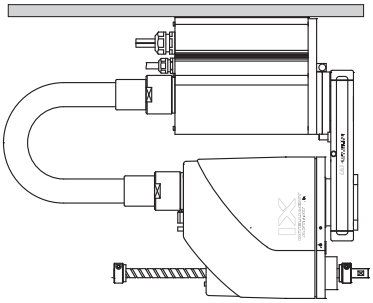
×	○	×

9.2 Installing the Robot

The operation area of the wall mount type extends to the back of the base. Because this type is specially designed for mounting on a wall surface, however, the operation area may be limited substantially depending on the structure of the mounting wall.

- Make sure the mounting wall surface is structured in a manner minimizing the potential for contact within the robot's operation area.
- If the above structure cannot be ensured, set a smaller operation area using the soft limits to prevent contact with the wall within the robot's operation area.

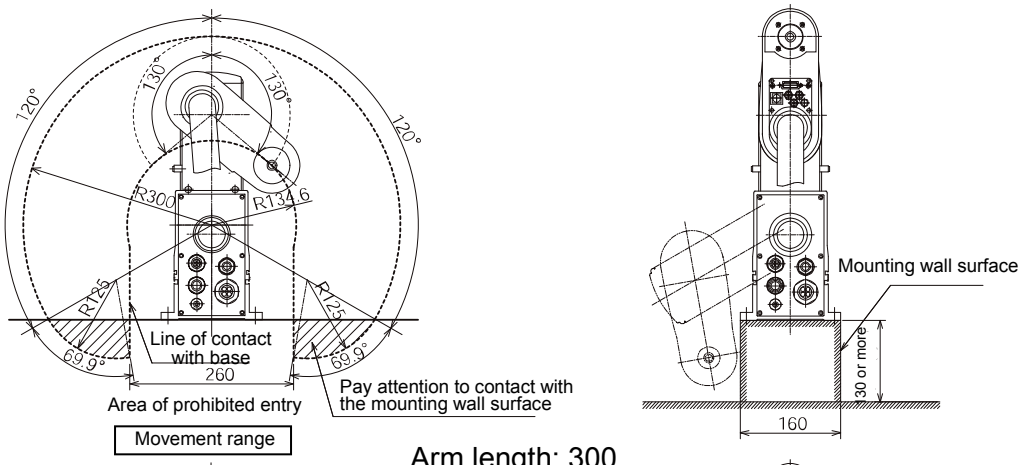

Arm length: 300

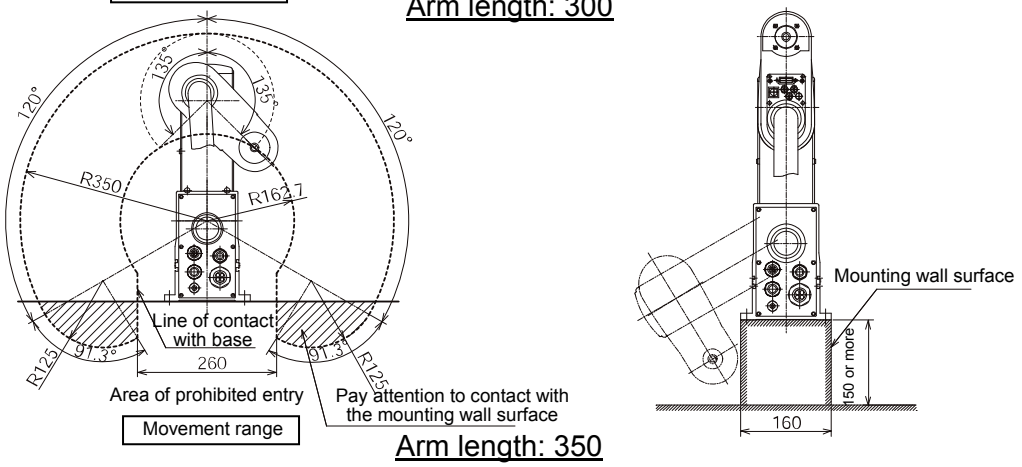

Arm length: 350

⚠ Danger **⚠ Warning**

- Since the wall mount specification is installed on a wall surface, the robot will drop and create a dangerous situation if the mounting area on the wall surface is damaged. Make sure the mounting area has sufficient strength and rigidity.
- Make sure the mounting wall surface is structured in a manner minimizing the potential for contact within the robot's operation area.
- If the above structure cannot be ensured, set a smaller operation area using the soft limits to prevent contact with the wall within the robot's operation area.

- 2-∅8H10 reference holes are provided on the mounting surface of the base. Use these holes to prevent the machine from dropping during installation or determine the machine position roughly. (Use the reference surface of the base to determine the accurate position of the machine.)
- When installing the machine, affix the machine onto the mounting surface with arms 1 and 2 extended and the machine supported by the base and arm 1.
  * Be careful not to apply force on the rotational axis and arm 2 cover during the installation work.
- Use M8 hexagonal socket head bolts and washers to securely affix the robot.
  (Tightening torque: 3.2 kgf-m)

For the hexagonal socket head bolts, use high-strength bolts of ISO10.9 or higher.

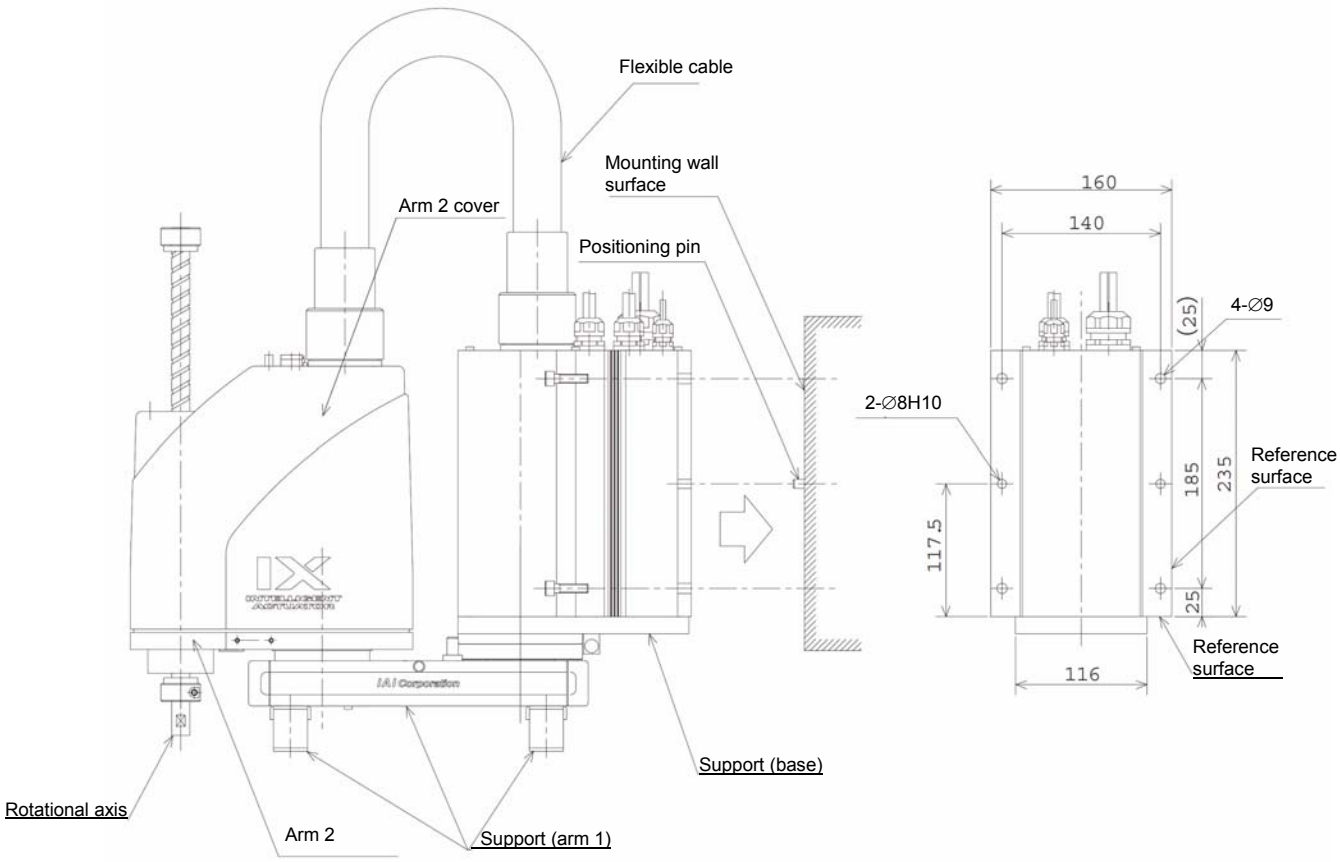

* The mounting direction is vertically reversed for the inverse specification.

⚠ Warning ⚠ Caution

- Be careful not to apply force on the rotational axis, flexible cable or arm 2 cover during the installation work (because it may cause these parts to bend, deform or otherwise trigger machine troubles).
- Tighten the hexagonal socket head bolts securely to the correct torque. If not, precision may drop and in the worst case the robot may topple and cause an accident.

10. Connecting the Controller

The controller connection cables are attached on the robot (standard cable: 5 m, to air-tube joint: 150 mm).

Pay attention to the following items when connecting the controller:

- Connect to the robot of the serial number specified on the robot designation label provided on the front panel of the controller.

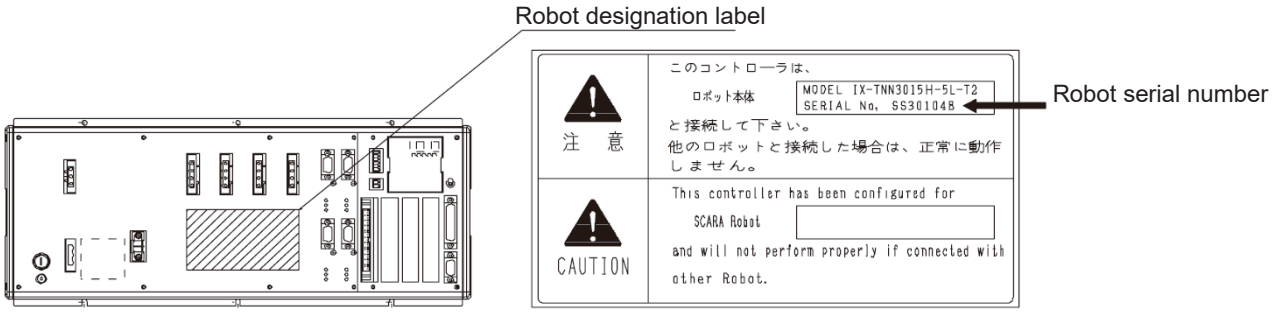

- Connect the cables securely after confirming that they are free from damage or bent connector pins.
- Connect each cable by aligning the indication on the marking tube on the cable with the indication on the controller panel.
- When installing the PG connector (D-sub connector), ensure correct orientation of the connector.
- Please prepare the dedicated 24V DC power source for the brake power circuit of Horizontal Articulated Robot since it is on the primary (high pressure) side.
  Do not attempt to share the secondary circuit power sources such as I/O power source.
  The brake power to be supplied to Horizontal Articulated Robot should be 24V DC ±10% and the voltage source capacity 20W.
  The brake power to be supplied to the controller should be 24V DC ±10% and the voltage source capacity 7W.
  (Note) It is necessary to increase the voltage source capacity of the brake power source if brake actuators are to be connected to the 5th and 6th axes of the controller. [Refer to the section of the voltage source capacity and heat generation in the controller operation manual.]

Refer to the operation manuals for the controller and PC software for the procedures to connect the I/O cable, controller power cable, PC connection cable, etc.

⚠ Warning

- Be sure to connect to the robot of the serial number specified on the front panel of the controller.
  The controller will not operate properly if any other robot is connected. Failure to observe this warning may cause the robot to malfunction, resulting in a serious accident.
- Before connecting or disconnecting a cable, always turn off the power to the controller.
  Connecting/disconnecting a cable with the power supplied to the controller may cause the robot to malfunction, resulting in a serious accident.
- Installing the connectors into the wrong sockets may cause the robot to malfunction. Be sure to check the designation on the cable with that on the controller panel before plugging in any connector.
- If the connectors are not inserted securely, the robot may malfunction and generate the risk of danger.
  Be sure to affix each connector with the supplied screws.

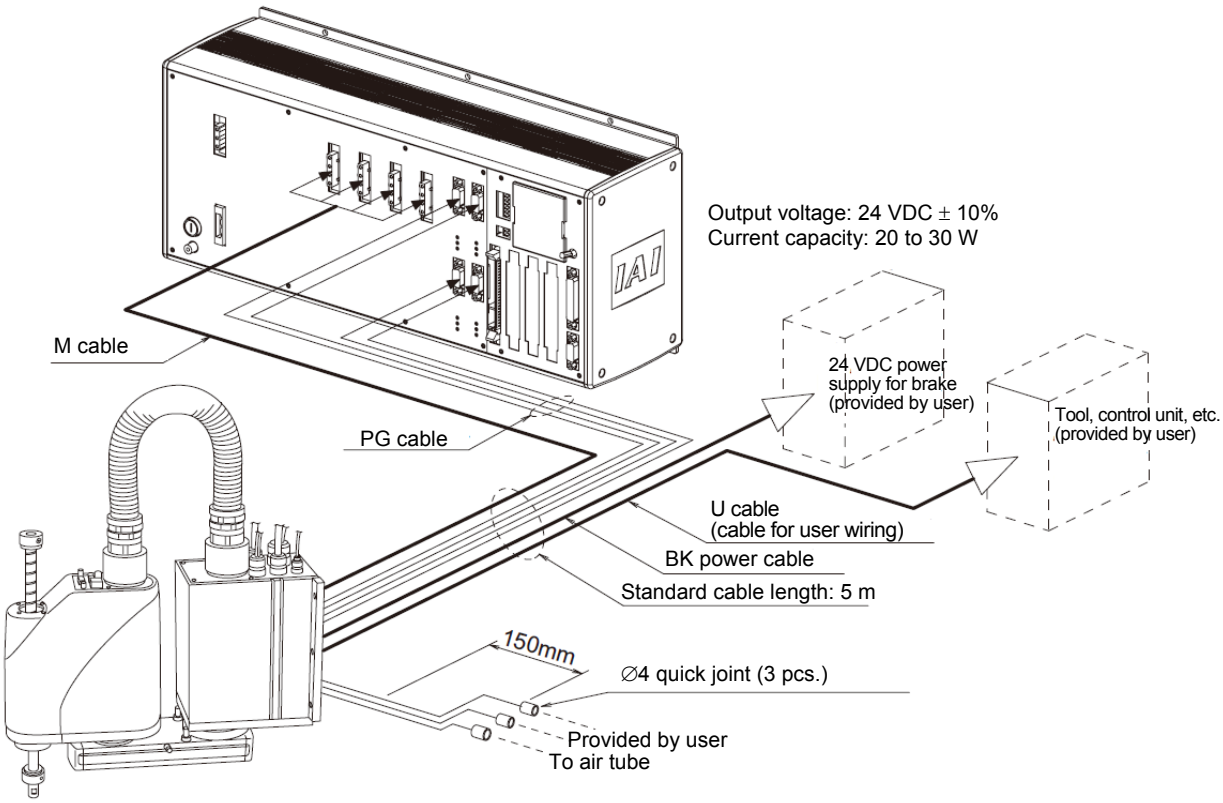

⚠ Warning

- Before connecting or disconnecting a cable, always turn off the power to the controller. Connecting/disconnecting a cable with the power supplied to the controller may cause the robot to malfunction, resulting in a serious accident.
- Installing the connectors into the wrong sockets may cause the robot to malfunction. Be sure to check the designation on the cable with that on the controller panel before plugging in any connector.
- If the connectors are not inserted securely, the robot may malfunction and generate the risk of danger. Be sure to affix each connector with the supplied screws.

If you are using an X-SEL-PX/QX controller, you must supply the brake power to the controller in addition to wiring the brake power cable from the SCARA robot.
Supply the brake power (+24 V) to the controller as shown in the figure.

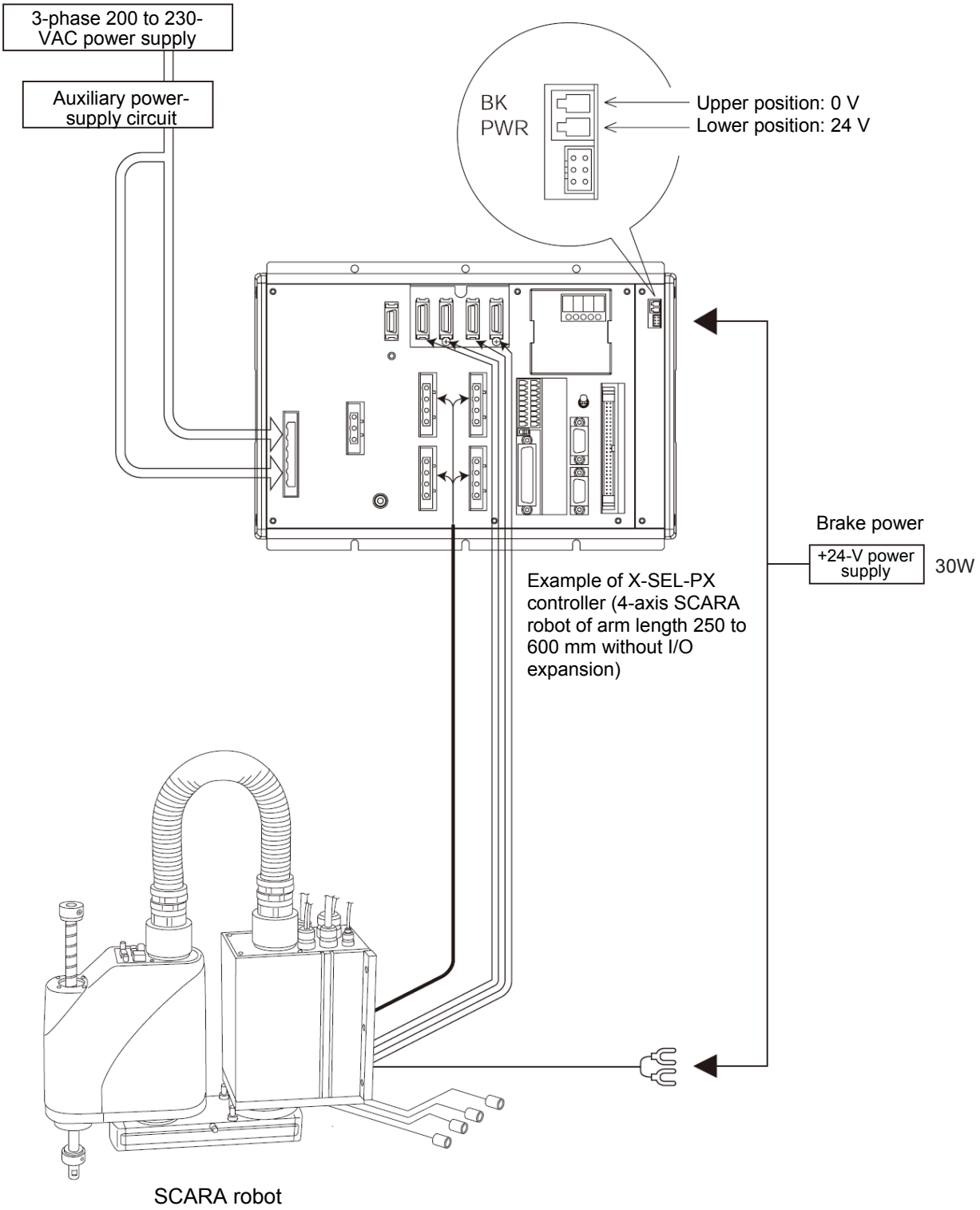

11. Checking after Installation

Once the robot has been installed, check the following items:

- Visually check the robot, controller and cables for dents and other abnormalities.
- Confirm that the cables are connected properly and that the connectors are inserted securely.

Warning

- Failure to perform these checks may result in a malfunctioning robot or a damaged controller or robot.

12. Precautions for Use

12.1 Setting the Acceleration/Deceleration

Set the acceleration/deceleration using the graphs below as a reference.

(1) PTP operation (Set using the SEL language commands ACCS and DCLS.)

IX arm length 300/350
Reference settings for PTP
acceleration/deceleration

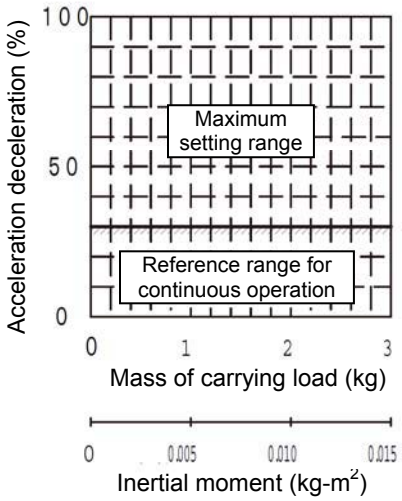

IX arm length 300/350
Reference duties for PTP
continuous operation

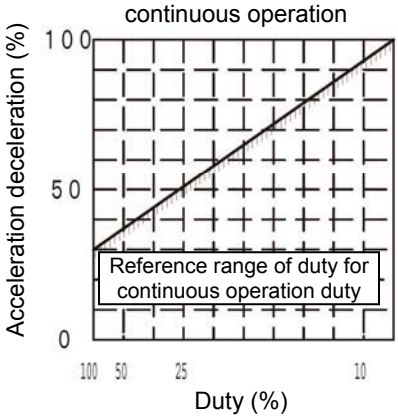

Duty (%) = (Continuous operation / (Continuous operation + Stopping time)) × 100

(2) CP operation (Set using the SEL Language commands ACC and DCL.)

Reference settings for CP
acceleration/deceleration

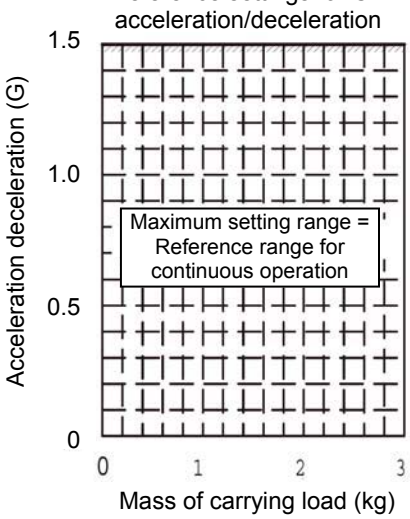

Maximum speed of CP operation at arm length 300	600 mm/sec
Maximum speed of CP operation at arm length 350	700 mm/sec

⚠ Caution

- When PTP operation is performed with the acceleration/deceleration set to 100%, the optimal acceleration/deceleration function adjusts the maximum acceleration/acceleration at which the robot can accelerate/decelerate carrying the load weight set by the WGHT command, to 100%.
  Be sure to set the mass and inertial moment using the WGHT command.
  Never set in the WGHT command a value smaller than the load mass installed on the vertical axis.
  If such smaller value is set, the robot accelerates/decelerates at the maximum acceleration/deceleration permitted for the applicable load weight or even higher, and consequently the SCARA robot may stop by generating an error or break down.
- Start from the appropriate reference setting for acceleration/deceleration during continuous operation, and then gradually raise the value for the purpose of adjustment.
- Operate the SCARA robot by maintaining an acceleration/deceleration appropriate for the applicable mass and inertial moment. If not, the life of the driving part may be shortened or damage or vibration may result.
- If an overload error (error code: D0A) occurs, lower the acceleration/deceleration setting or provide an appropriate stopping time based on the reference duty for continuous operation.
  Duty (%) = (Continuous operation / (Continuous operation + Stopping time)) / 100
- To move arm 1 or 2 of the SCARA robot horizontally at high speed, keep the vertical axis near the top position. If such high-speed operation is performed with the vertical axis lowered, the vertical axis may vibrate.
- Be sure to keep the inertial moment and carrying load at the allowable values or less.
- The carrying load represents the inertial moment and mass at the center of rotation of axis 4. If the acceleration/deceleration is raised when the inertial moment far exceeds the allowable value, control is disabled in the rotating direction.
- Depending on the position of the vertical axis, the vertical axis may generate vibration when the inertial moment of the load is high. If vibration occurs, lower the acceleration/deceleration.

12.2 Push Force of the Vertical Axis

Set the push force of the vertical axis by referring to the graph below.

Relationship of push force and push torque limit during positioning

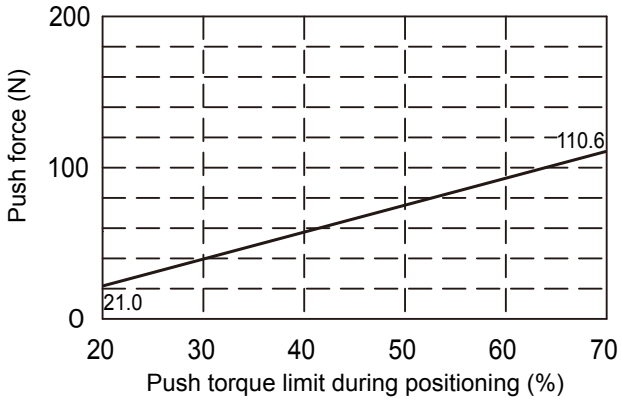

Push-motion operating speed 10 mm/sec

⚠ Caution

- Use the PUSH command to perform push-motion operation involving the vertical axis. If push-motion operation is performed without using the PUSH command, the life of the driving part may be shortened or damage or vibration may result.
- Push force can be changed by driver card parameter No. 38, “Torque limit during positioning.”
- When performing push-motion operation, keep the speed to 10 mm/sec or below.
  If the speed exceeds 10 mm/sec, provide a shock-reducing mechanism to keep the vertical axis from receiving shock.
- The graph of push force and push torque limit during positioning shows characteristics when no load is installed on the vertical axis. In downward push-motion operation, the applicable push force increases by the load mass.
  In upward push-motion operation with the inverse specification, the applicable push force decreases by the load mass.
- Push force is controlled by servo motor current. No control is implemented based on feedback of push force.
- Push force is subject to a variation of approx. ±5%.

12.3 Tools

The tool mounting part must have sufficient strength and rigidity, along with adequate fastening power to prevent positional shift.

It is recommended that a tool be installed over a split ring, span ring or other appropriate part. A sample configuration of tool installation is given below.

Set the tool diameter to 100 mm or less. If the tool diameter exceeds 100 mm, the tool will interfere with the robot within the robot's operation area. If the tool diameter exceeds 100 mm or the tool interferes with peripheral equipment, decrease the soft limits to reduce the operation area.
Also keep the inertial moment of the tool and load at the allowable value or less. (Refer to 11.4, "Carrying Load.")

Use the D-cut surface at the end of axis 4 (rotational axis) to adjust the position (direction) of axis 4. To set the rotating direction using the D-cut surface and setscrews, be sure to use setscrews with resin or brass pad or set pieces made of soft material.
(Avoid attachment of the tool at the D-cut surface via thread fastening. Doing so may damage the D-cut positioning surface.)

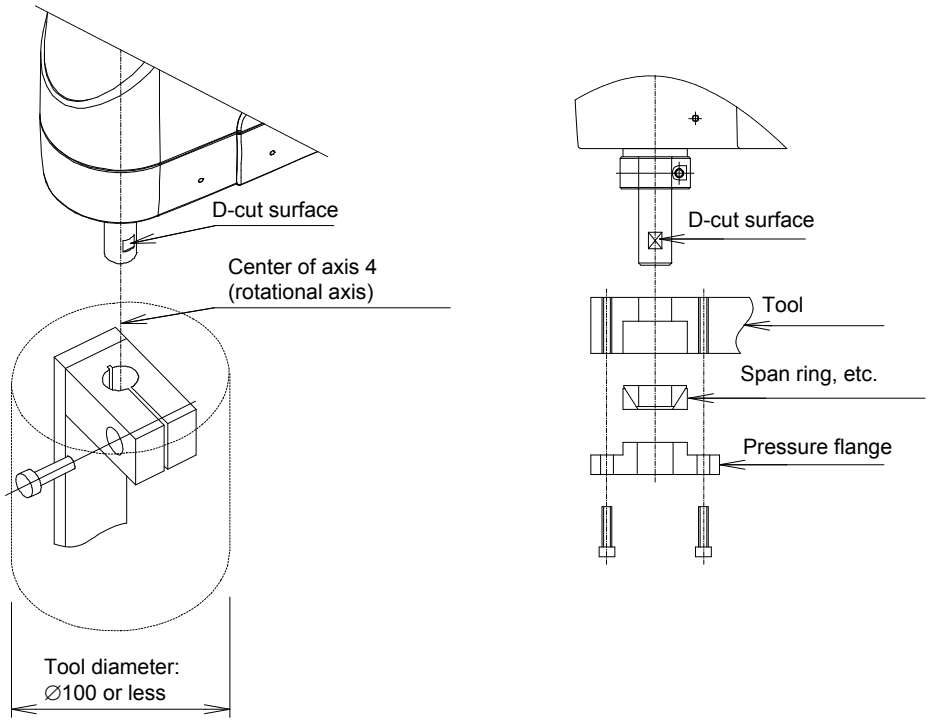

⚠ Warning **⚠ Caution**

- Turn off the power to the controller and robot before installing a tool.
- If the tool mounting part does not have sufficient strength, it may break while the robot is operating and cause the tool to detach and fly off.
- If the tool diameter exceeds 100 mm, the tool will contact the robot within the robot's operation area, causing damage to the tool, load and/or robot.
- Avoid attachment of the tool at the D-cut surface via thread fastening. Doing so may damage the D-cut positioning surface.

12.4 Carrying Load

Loading capacity

Model number	Rated load capacity	Maximum load capacity
IX-TNN3015H/3515H IX-UNN3015H/3515H	1 kg	3 kg

Load's permissible moment of inertia

Model number	Rated load capacity	Remarks
IX-TNN3015H/3515H IX-UNN3015H/3515H	0.015 kg-m^2	Both rated and maximum

Load offset (from the center of axis 4 (rotational axis))
40 mm or less

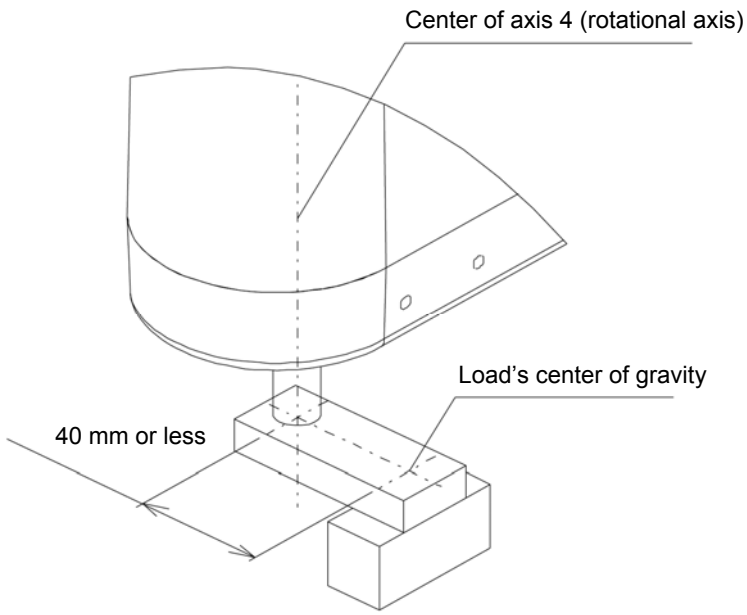

⚠ Caution

- Set appropriate acceleration/deceleration according to the mass of the end and moment of inertia. Failure to do so may cause the drive part to wear prematurely or may result in damage or vibration.
- If vibration occurs, lower the acceleration/deceleration as appropriate.
- If the load gets offset, the robot becomes more likely to cause vibration. Design the tools so that the load's center of gravity aligns with the center of axis 4.
- Do not move the robot horizontally with axis 3 (vertical axis) extended. It may cause the vertical axis to bend and disable the axis. To move the robot horizontally with axis 3 extended, adjust the speed and acceleration/deceleration as appropriate.

12.5 User Wiring and Piping

The robot comes with standard cables and tubes that the user can use in a desired wiring/piping configuration.

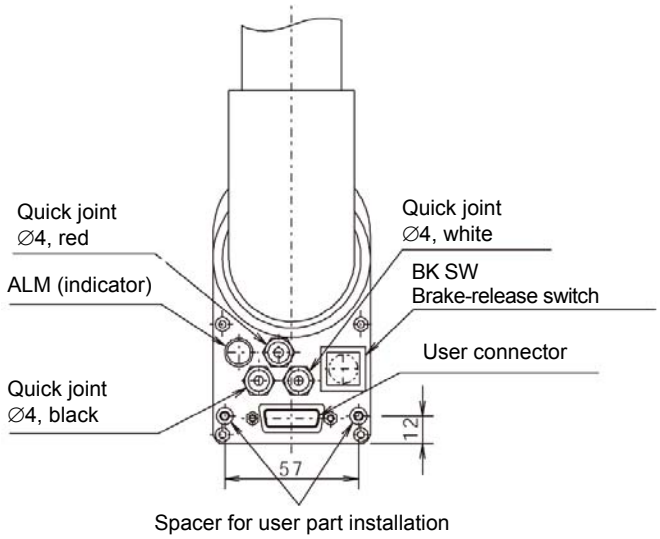

Panel

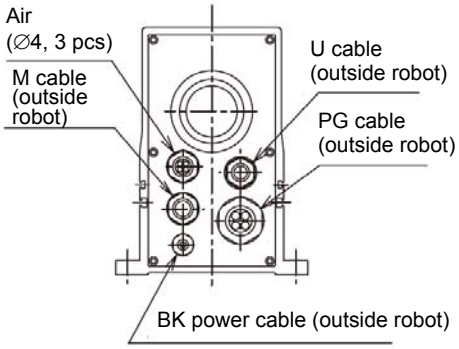

Rear Panel

User connector specifications

Rated voltage	30 V
Permissible current	1.1 A
Conductor size and number of wires	AWG 26 (0.15 mm^2), 15 wires
Other	Twisted-pair cable (1 to 24), shielded

Shape of Y-terminal

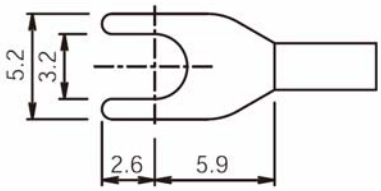

Piping specifications

Normal service pressure	0.8 MPa
Dimensions (outer diameter x inner diameter) and number of tubes	∅4 mm x ∅2.5 mm, 3 pieces
Working medium	Air

Spacer for user part installation

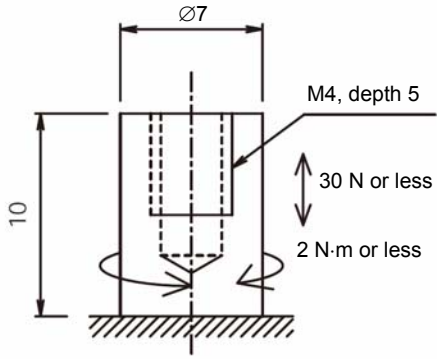

External force applied to the spacers must not exceed 30 N in the axial direction or 2 N·m in the rotating direction (for each spacer).

ALM (indicator) specifications

Rated voltage	24 VDC
Rated current	12 mA
Illumination color	Red LED

The robot comes with a mating 15-pin plug for the D-sub connector.
Solder a user-supplied cable to the D-sub connector (plug), attach the supplied hood, and then connect to the user connector (socket). Use a shielded cable with an outer diameter of ∅11 or less.

To turn on the ALM (indicator), the user must configure a dedicated circuit that uses the controller I/O output signal, etc.

User connector pins and corresponding Y-terminals

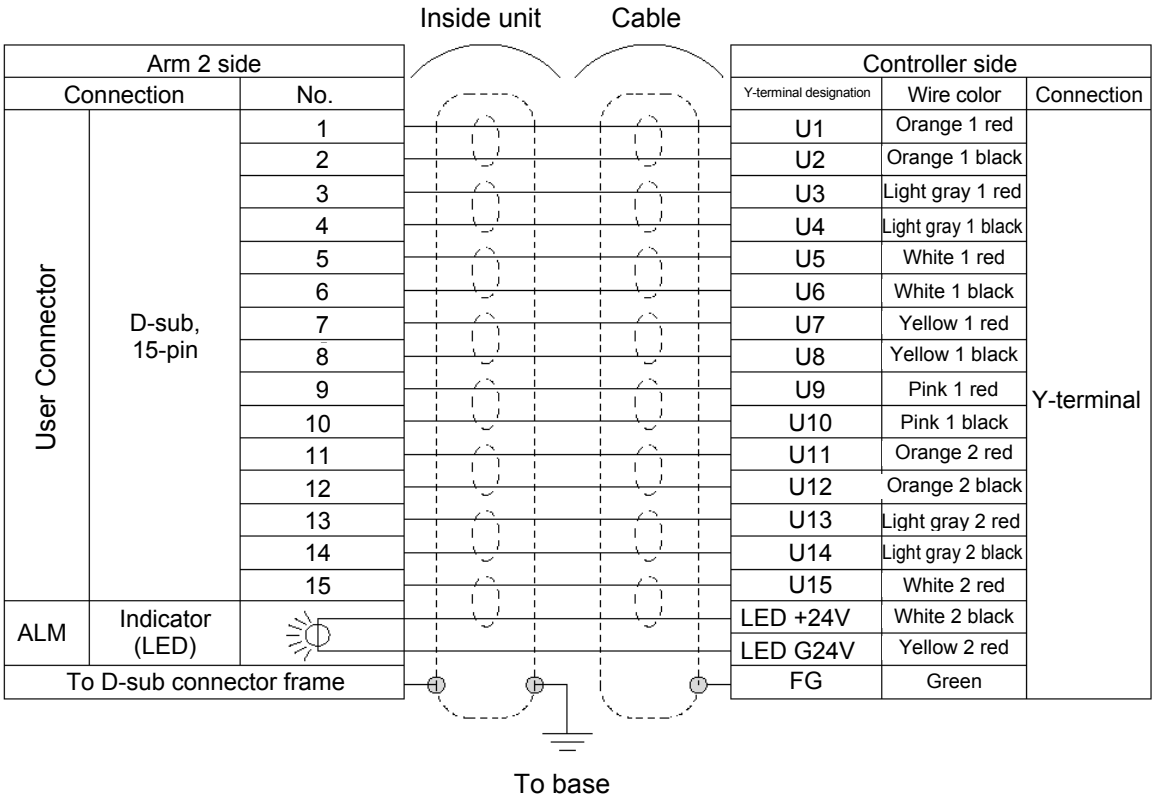

Arm 2 side			Controller side		
Connection		No.	Y-terminal designation	Wire color	Connection
User Connector	D-sub, 15-pin	1	U1	Orange 1 red	Y-terminal
		2	U2	Orange 1 black	
		3	U3	Light gray 1 red	
		4	U4	Light gray 1 black	
		5	U5	White 1 red	
		6	U6	White 1 black	
		7	U7	Yellow 1 red	
		8	U8	Yellow 1 black	
		9	U9	Pink 1 red	
		10	U10	Pink 1 black	
		11	U11	Orange 2 red	
		12	U12	Orange 2 black	
		13	U13	Light gray 2 red	
		14	U14	Light gray 2 black	
		15	U15	White 2 red	
ALM	Indicator (LED)		LED +24V	White 2 black	
			LED G24V	Yellow 2 red	
To D-sub connector frame			FG	Green	

⚠ Warning

- Before commencing wiring/piping work, turn off the power to the controller and the power/air supplies to the robot. Failure to do so may cause the robot to malfunction.
- Use cables and tubes within their specifications. Failure to do so may result in fire or short circuit due to an overheated cable, or may cause air leaks.
- Connect the shielded cable to the hood. Otherwise, the robot may malfunction due to noise.
- Secure the supplied D-sub connector using the screws on the hood.

12.6 Moving Direction

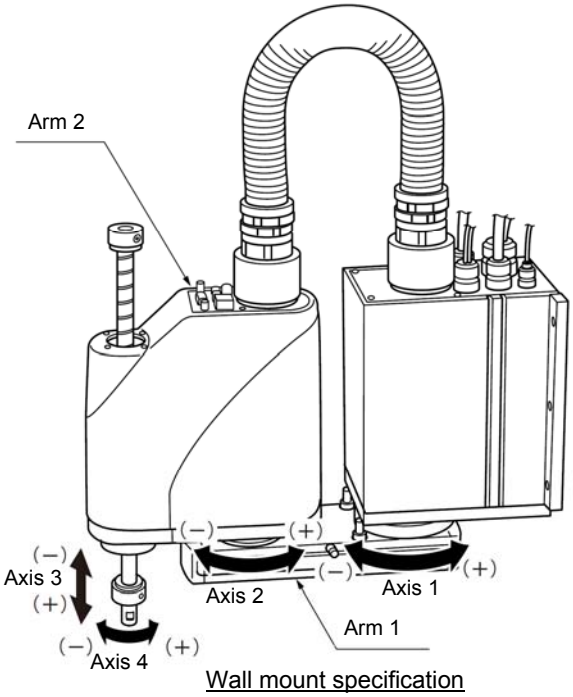

Wall mount specification

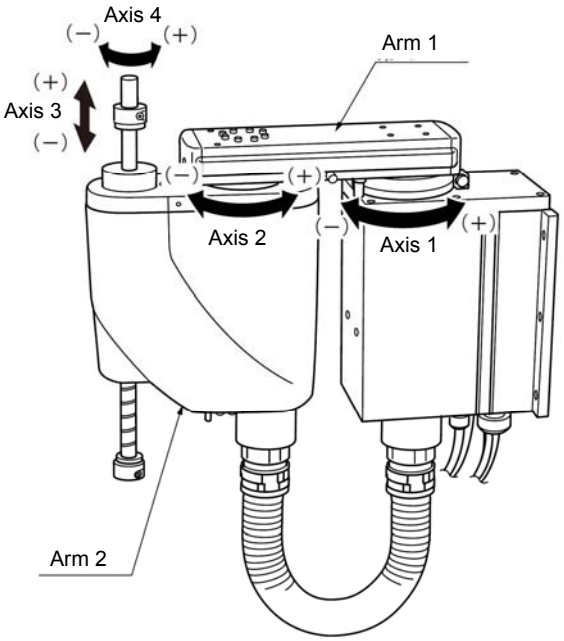

Inverse specification

13. Maintenance and Inspection

⚠ Warning: Do not attempt to disassemble or cut the cable of the following items. By doing so, recovery to normal condition cannot be done, and it may cause a critical accident such as error operation, fire or malfunction.
- Disassembly of the servo motor
- Disassembly of the ball reduction gear
- Disassembly of the ball screw and spline shaft
- Disassembly of the bearing
- Disassembly of the harmonic speed reducer
- Disassembly of the brake
- Cutting of the cable

13.1 Inspection Items and Periods

Have daily inspections and regular inspections to use the robot in a stable condition for a long term. Make sure to follow the caution for maintenance and inspection in Safety Guide.

[1] Daily Maintenance Inspections
Have a maintenance and inspection for those described below before starting up in everyday operation, and if any problem is found, have an appropriate treatment.

Maintenance Inspection Area	Maintenance Inspection Details
Safety Cage	Correct the deformation or positional shift of the cage. Confirm that the interlock mechanism is operating properly.
Appearance of Robot	Check the exterior for abnormality, flaws, dents, etc. (If the robot has flaws or other abnormalities, please contact IAI.)
Operation of Robot	Check for abnormal operation, vibration or noise
Cables	Check for damage and pinch of cables Check the cable mounting parts for looseness.
Emergency-Stop Switch	Confirm that the emergency-stop switch functions properly.

[2] Half a Year Maintenance Inspection
Have a maintenance and inspection for the following items once in half a year (every 6 months). If the robot main body has flaws or other abnormalities, please contact IAI.

Maintenance Inspection Area	Maintenance Inspection Details
Robot Main Body	Check for any looseness of the attachment bolts on the robot body and play on cover related components. (Tighten if any loosened bolt is found.)
Ball Spline	Supply grease to ball screw and ball splined. • Other Types than Dustproof/Splash proof type and Clean type: Multemp LRL No. 3 Grease by Kyodo Yushi • Dustproof/Splash proof type and Clean type: AFE-CA Grease by THK [Refer to 13.2, “Ball Screw Spline Grease Supply”.]
Connectors	Check the connectors for looseness.

[3] Yearly Maintenance Inspection

Have a maintenance and inspection for the following items every year.

Maintenance Inspection Area	Maintenance Inspection Details
Robot Main Body Arm Attachment Bolts	Check for any looseness of the bolts on the arm. (If any play is found on the arm attachment, tighten up the bolts.) [Refer to 13.3, “Check for Looseness of Arm Attachment Bolts”.]

[4] 2.5 Years Maintenance Inspection

Have a maintenance and inspection for the following items once every 2.5 years.
If the robot main body has flaws or other abnormalities, please contact IAI.

Maintenance Inspection Area	Maintenance Inspection Details
Battery Replacement	Replace the absolute data backup battery. The battery life may vary depending on the condition and environment of the robot use, but it is approximately three years. It is recommended to have the battery replaced every 2.5 years. (Battery model code: AB-3, Quantity to use: 4 units) [Refer to 13.4, “Replacement of Absolute Backup Battery”.]
Third Axis Belt	Check the third axis (vertical axis) timing belt surface for any defect or excessive wear. (Check it five years later from the operation start, and after that, check it every year). When any defect is found, the replacement of the timing belt is required. (If any defect is found, contact IAI). [Refer to 13.5, “Third Axis Timing Belt Visual Check”.]

Note 1: In case the duty of the robot operation is high, or ambient temperature is high, supply the grease frequently (every year).

[5] 5 Years Maintenance Inspection

Have a maintenance and inspection for the following items once every 5 years.
After 5 years has passed, have a maintenance and inspection for the following items every year.
If the robot main body has flaws or other abnormalities, please contact IAI.

Maintenance Inspection Area	Maintenance Inspection Details
First axis and Second axis speed reducer Bearings on joints	Lost motion measurement If the lost motion value exceeds the allowable range, it is considered the end of life for speed reducer or bearing. It is necessary to have the unit disassembled for such work as replacement of the speed reducer. (Please contact IAI if any abnormality is found.) (Note) The life of the speed reducer may vary depending on the duration of operation, speed or load, but it is approximately five to seven years. [Refer to 13.6, “How to Measure Lost Motion”.]
Forth Axis Belt	Check the forth axis (rotational axis) timing belt surface for any defect or excessive wear. (Check it five years later from the operation start, and after that, check it every year). When any defect is found, the replacement of the timing belt is required. [Refer to 13.7, “Forth Axis Timing Belt Visual Check”.]

13.2 Ball Screw Spline Grease Supply

The Ball Screw Spline on the vertical axis require grease to be supplied.

13.2.1 Applicable Grease and Supply Period

Types	Grease to Apply		Supply Period
Other Types than Dustproof/Splash proof type and Clean type	Kyodo Yushi	Multemp LRL No. 3	Every half a year
Dustproof/Splash proof type and Clean type	THK	AFE-CA	

⚠ Caution: Do not attempt to apply fluorine grease. When mixed with lithium grease or urea grease, not only decrease the grease characteristics, but also may damage the driving part.

13.2.2 Grease Supply

Tool necessary for work
Grease, Cloth

Procedure
1) Wipe old grease away from entire surface of the ball screw spline axis using a cloth.
2) Apply new grease on the entire surface of the ball screw spline axis.
3) Apply grease two or three times and after the grease application, move the ball screw spline up and down so that grease is spread smoothly all over the inside bearing.

[Apply grease]

Quantity
6 to 12 cc (5 to 10g)

4) Wipe off excessive grease on the ball screw spline axis surface (to the extent that grease does not fly off when the spline axis is operated).

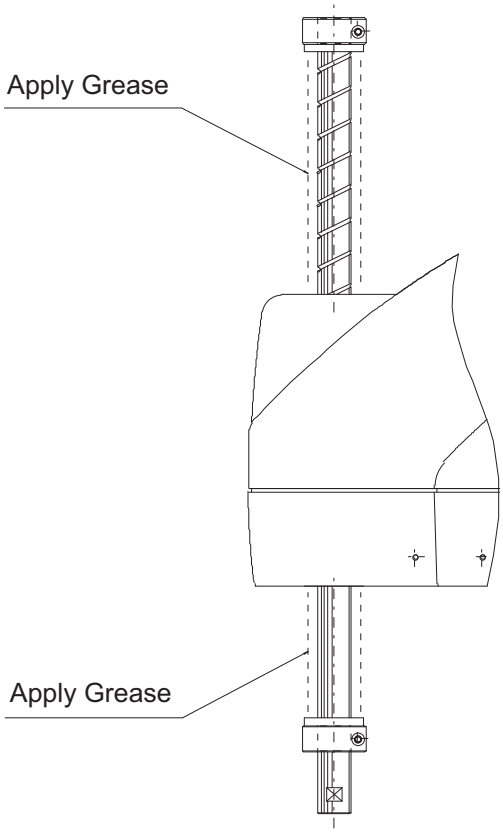

⚠ Caution: In case the grease got into your eye, immediately go see the doctor to get appropriate care. After finishing the grease supply work, wash your hands carefully with water and soap to rinse the grease off.

13.3 Check for Looseness of Arm Attachment Screws

Tool necessary for work
Hex wrench set, Phillips Screwdriver (M3 Flat-head screw)

Procedure
1) The first axis set screw appears when the cover is removed.
2) The second axis set screw can be seen from the position under the arm #1.
3) Check for any looseness of the set screws for each axis using the hex wrench.
   (Tighten if any loosened screw is found.)
4) Attach the cover. Tightenting torque for M3 flat-head screw is 0.74 N•m

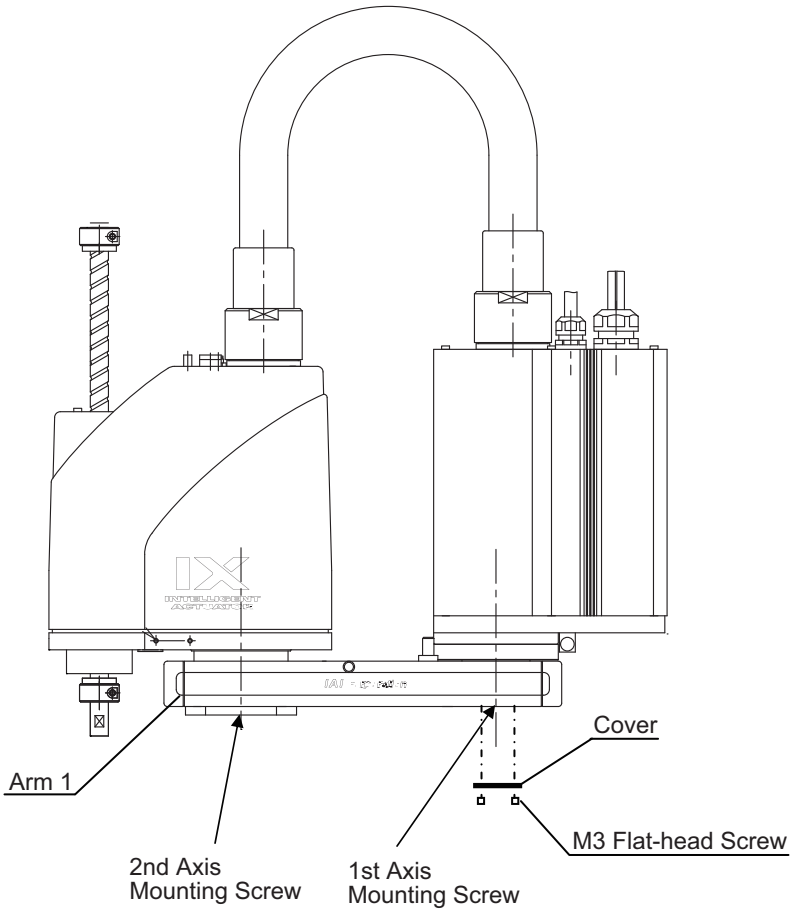

Tightening Torque [N•m]		Remarks
1st axis	2nd axis	
12.3	7.2	1st axis: Hexagon soket-head screws M6 strength class 10.9 2nd axis: Hexagon soket-head screws M5 strength class 10.9

13.4 Replacement of Absolute Backup Battery

13.4.1 Preparation

The following items are required when replacing the batteries:
Before replacing the batteries, turn off the power to the controller, control panel and other relevant units.

Model number	Tool	New, 1x-only specification
IX-TNN3015H/3515H IX-UNN3015H/3515H	Phillips screwdriver	AB3 (4 pcs)

13.4.2 Replacement Procedure

(1) Remove the six low-head cap screws (1) and remove the rear panel (base).
(2) Remove the batteries from the battery holder.
(3) Remove the connectors between the extension cable from the BAT connector and the battery and connect new batteries.

- After removing the old batteries, quickly connect new batteries (roughly within 5 minutes x number of batteries).
- If new batteries are not connected for a longer period, the rotation data will be lost and an absolute reset will become necessary.
- Replace batteries one axis at a time. If the batteries for all axes are replaced at once, the work may not be completed within the specified time.

(4) Install the batteries into the battery holder.

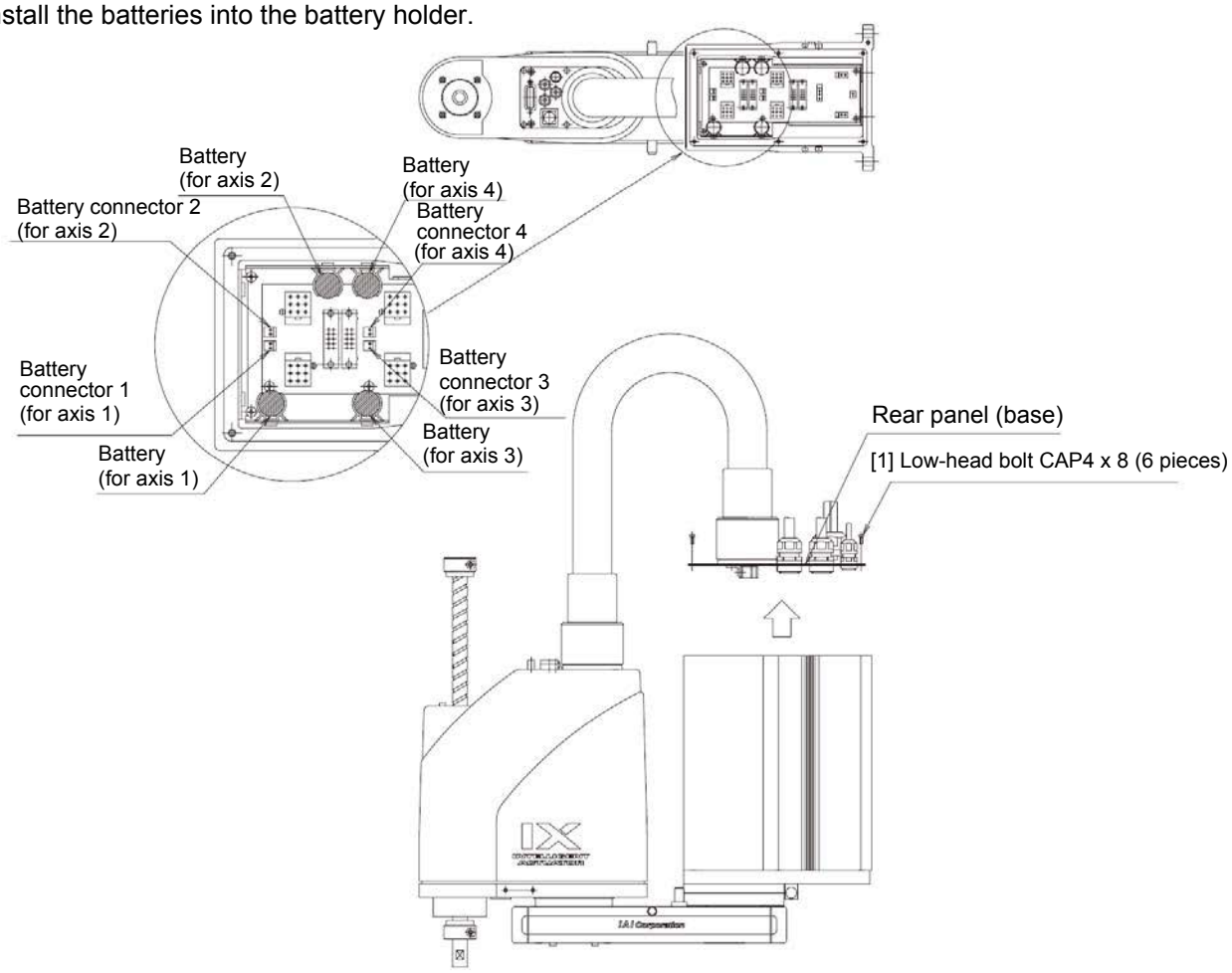

(5) Affix the rear panel (base) using the six low-head cap screws (1).

Caution

- When installing the rear panel (base), be careful not to pinch the cables inside.

13.5 Third Axis Timing Belt Visual Check

Tool necessary for work
Penlight

Procedure
Check the timing belt surface using a penlight as shown in the pictures for any defect or excessive wear.

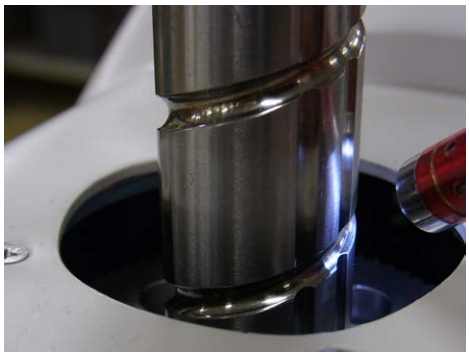

13.6 How to Measure Lost Motion

Tool necessary for work
Digimatic Indicator (Measurement range 10mm or more, minimum display 0.001mm) or equivalent acceptable
Magnet stand

Procedure
1) Create a position and a program to operate first Axis and second Axis in ±5deg with PTP Operation.
2) Take off the cover (on Arm 2) on one side and allocate the measurement equipment as shown in the figure below.

- Measurement Point: See figure below
- Operation Command: PTP Operation (MOVP Command)
- Operation Speed: 30%
- Acceleration/Deceleration : 30%

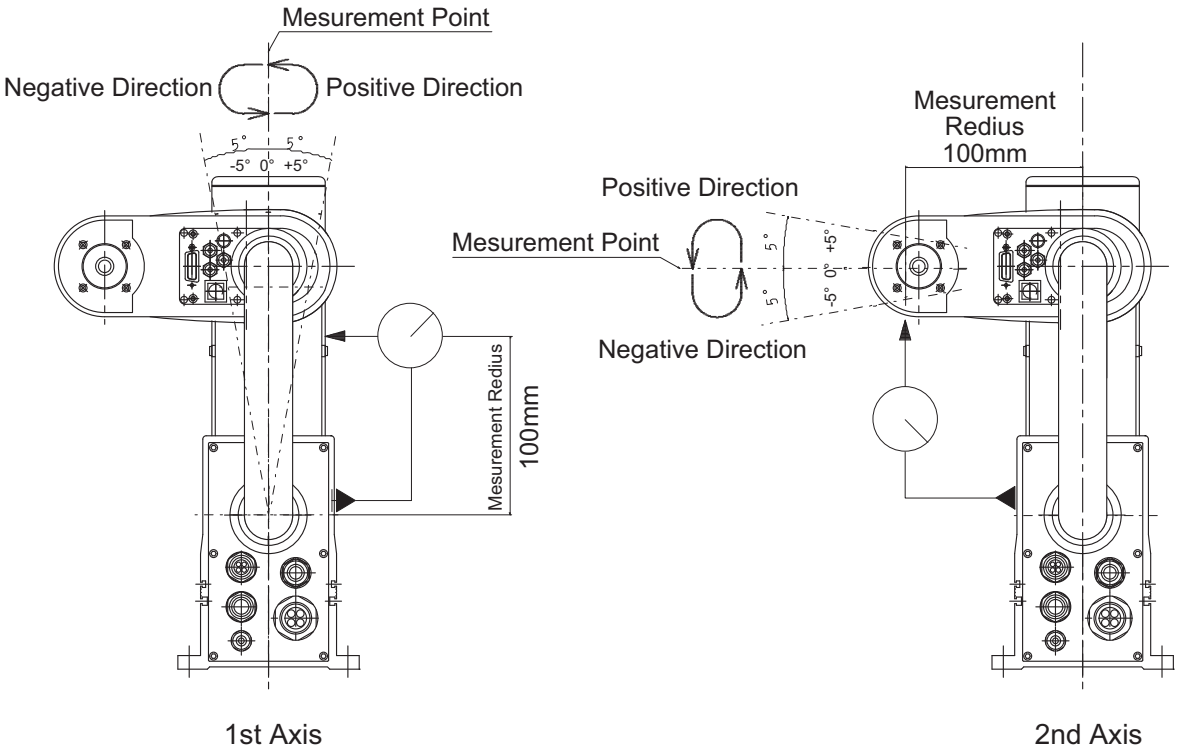

a. Move the axis from +5deg towards 0deg, the measurement point, in the positive direction, and measure the position.
b. After moving from 0deg towards -5deg in the positive direction, move it from -5deg towards 0deg, the measurement point, in the negative direction, and measure the position.
c. In addition, after moving from 0deg towards +5deg in the negative direction, move it from +5deg towards 0deg, the measurement point, in the positive direction, and measure the position.

Repeat the measurements of b and c for seven times in each positive and negative direction. The difference of the average of the measurement results is determined as the lost motion.

Example for Lost Motion Measurement

Number of Times	Positive Direction	Negative Direction
1	+0.003	-0.003
2	-0.003	+0.003
3	+0.003	+0.005
4	-0.003	-0.005
5	+0.003	-0.005
6	+0.003	-0.004
7	+0.003	-0.006
Average	+0.0013	-0.0021
Difference (mm)	|+0.0013-(-0.0021)| = 0.0034	
Measurement Radius (mm)	100	
Lost Motion (arc min)	[atan(0.0034/100)]*60 nearly equals 0.12	

How to decide
It is normal as long as the figured out values are below the allowable values shown in the table below.

Lost Motion Allowance

Lost Motion (arc min.)		Measurement Radius (mm)
1st axis	2nd axis	
1.0	1.0	100

13.7 Forth Axis Timing Belt Visual Check

Tool necessary for work
Penlight, Hex Wrench Set, Phillips Screwdriver (M3 Flat-head screw)

Procedure
1) Move the up/down axis to the position of 50 to 100mm.
2) Remove the set screw for the arm 2 lower cover.
3) Check the timing belt surface using a penlight for any defect or excessive wear.
4) Attach the cover.

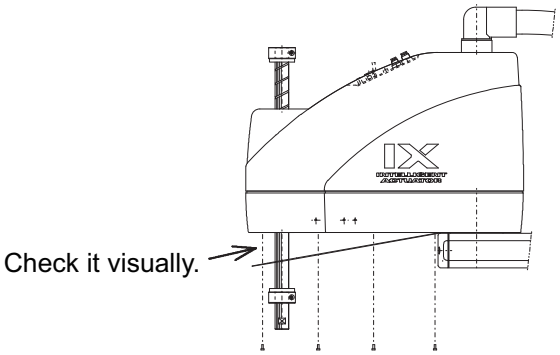

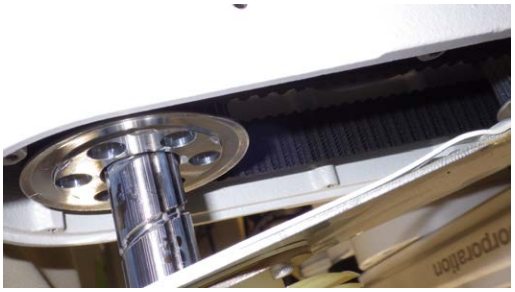

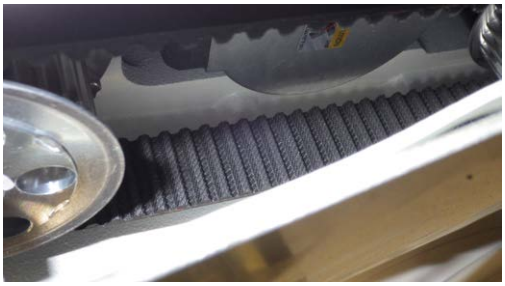

13.8 Absolute Encoder Reset Method

13.8.1 Preparation for Absolute Reset

The following jigs are required to perform an absolute reset.

- Absolute reset adjustment jigs

Model number	Remarks
JG-2	For arm length 250/300/350

Connect the robot, controller and PC cables so that the robot/controller can be operated using the PC software. Be sure to check the EMG switch operation beforehand.
An absolute reset of the rotational and vertical axes requires absolute reset adjustment jigs, but jigs are not always required for an absolute reset of arms 1 and 2.
(A multi-rotation reset can be performed as long as the current position is within ±1 graduation on the positioning mark sticker.)

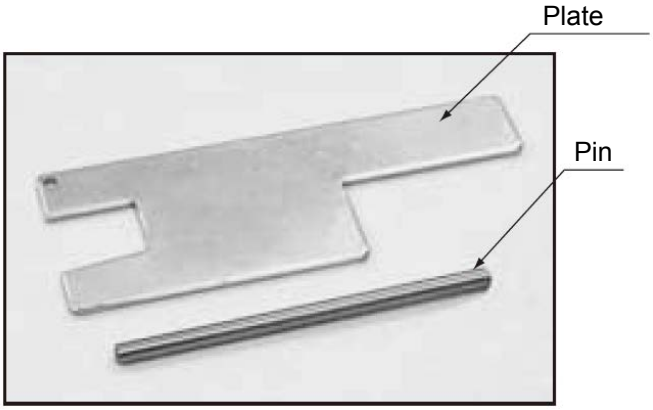

Example of Absolute Reset Adjustment Jig (Model number JG-1)

Warning

- Fully understand the applicable inspection/maintenance work, because failure to do so may result in a serious injury accident.
- Put up a “WORK IN PROGRESS” sign to prevent other operators from accidentally operating the controller, operation panel, etc. Remember to insert the seal washer

13.8.2 Starting the Absolute Reset Menu

(1) Open the Abs Encoder Reset window from the PC software.
(*) Select “Absolute Reset (SCARA Axis) (Y)" if you are using an X-SEL-PX/QX controller.

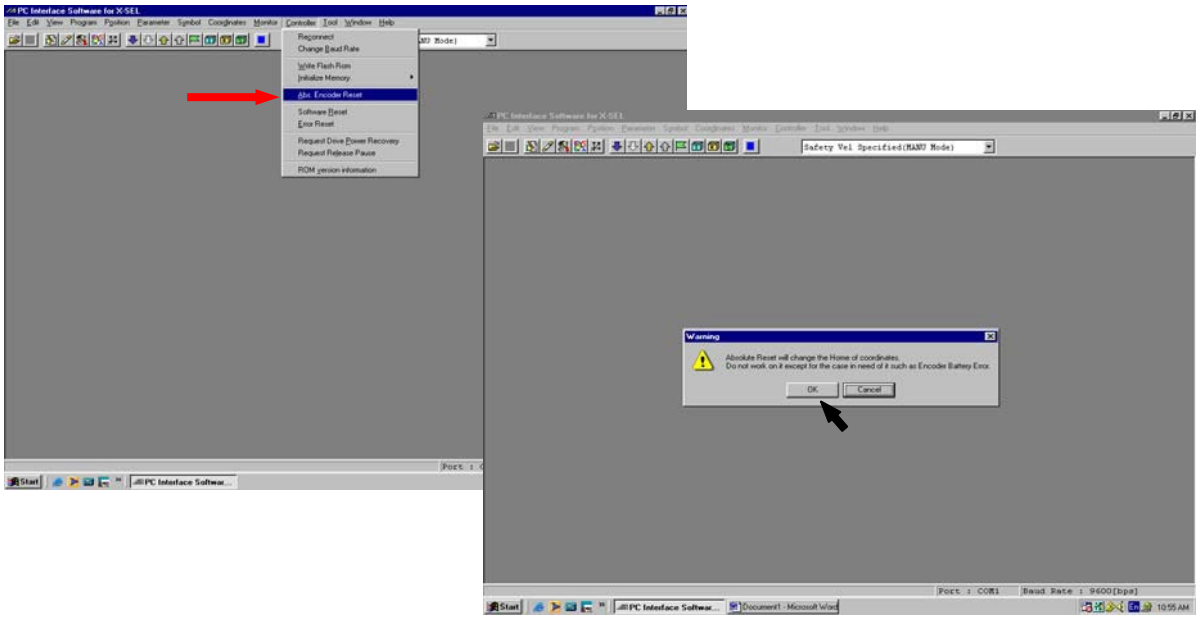

Starting Up Absolute Reset Window

2. The Abs Encoder Reset window opens.
   - One of three absolute reset screens –for arm 1, arm 2 and rotational axis + vertical axis– is displayed when a corresponding tab is clicked.

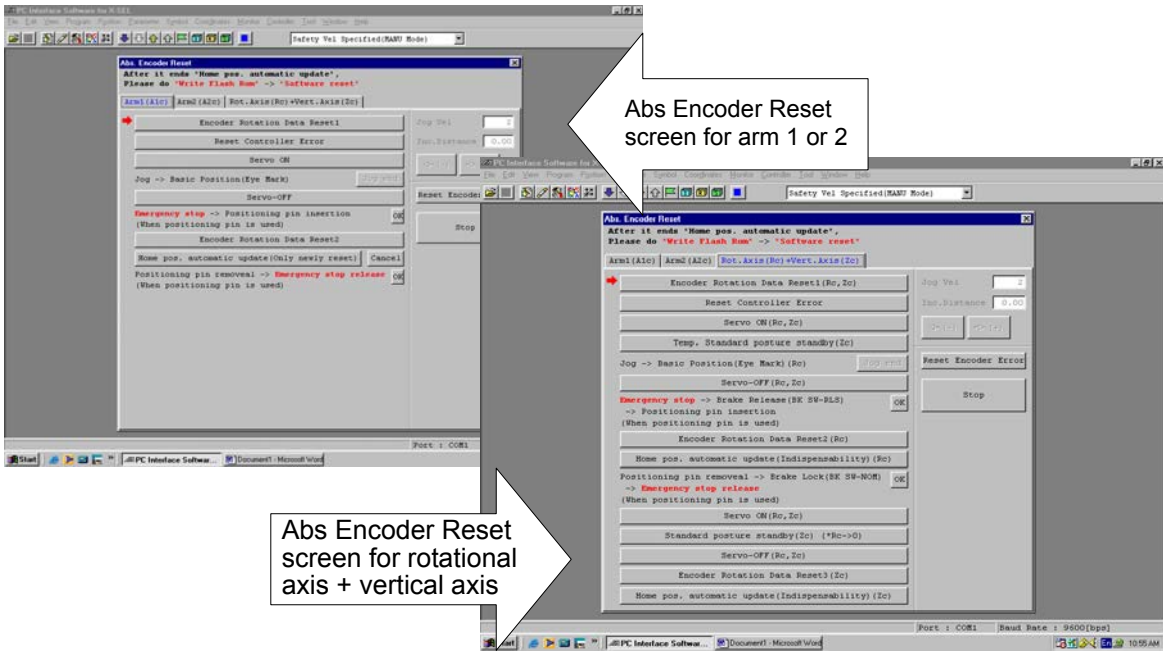

Absolute Reset Window

13.8.3 Absolute Reset Procedure for Arm 1 or 2

(1) Click the “Encoder Rotation Data Reset1” button.

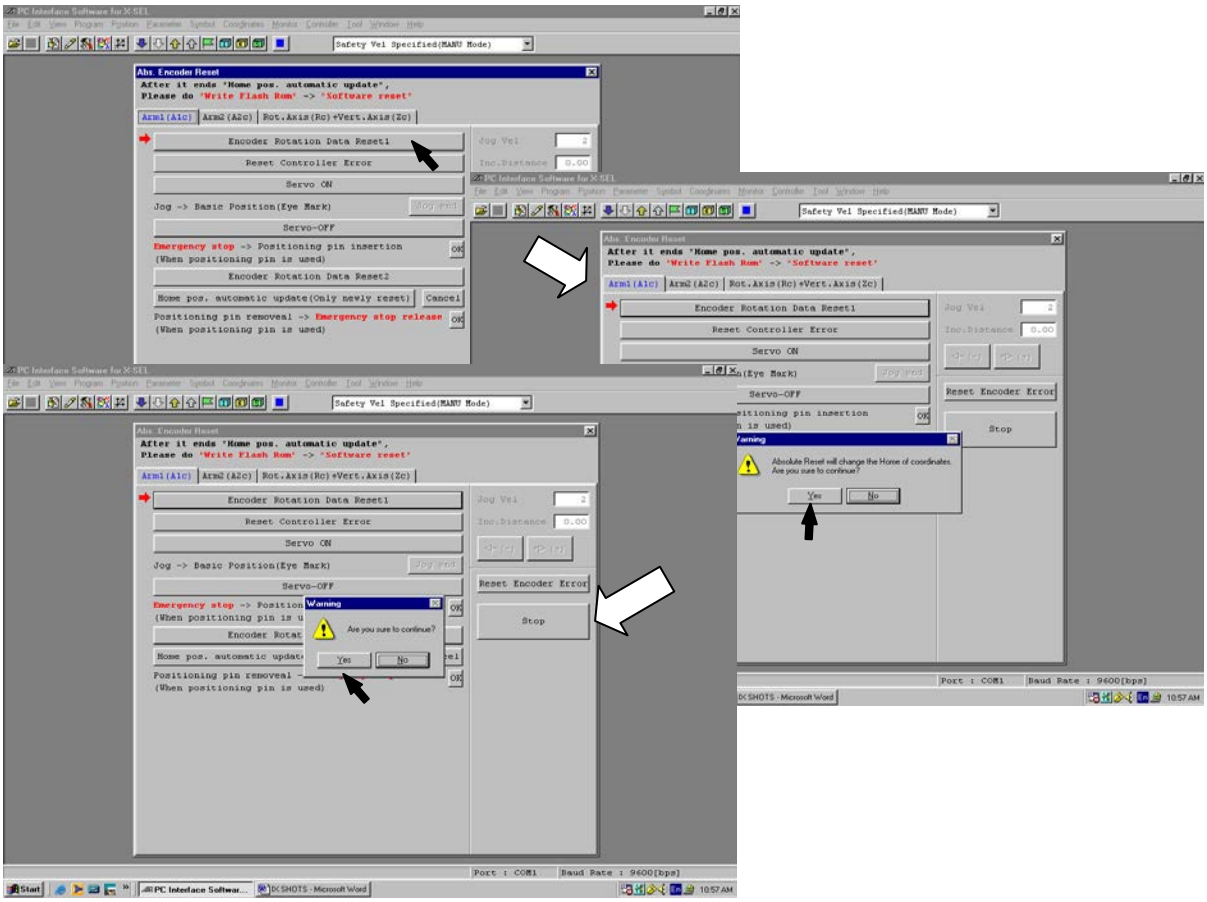

Encoder Multi-rotation Data Reset 1

(2) Click the “Reset Controller Error” button.

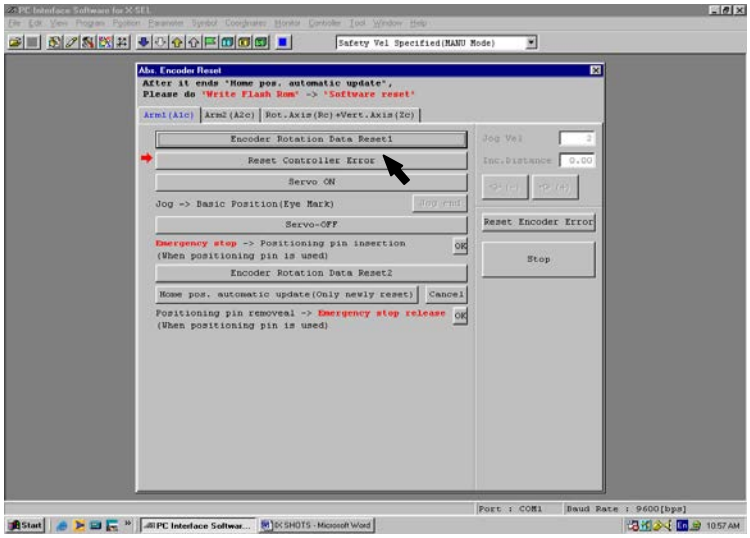

Controller Reset

(3) Click the “Servo ON” button.

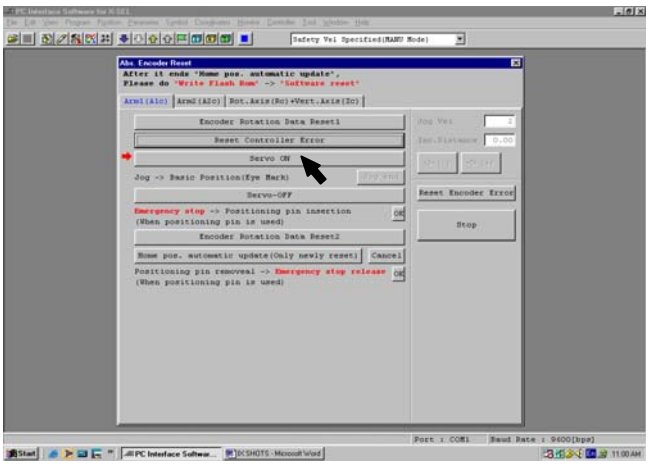

Servo ON

(4) Jog the arm to near the reference position (see reference position drawing in step (7), and click the “Jog end” button.

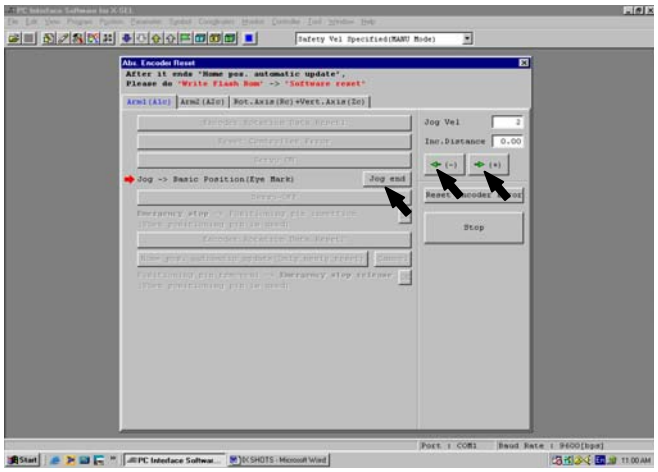

Jogging

(5) Click the “Servo-OFF” button.

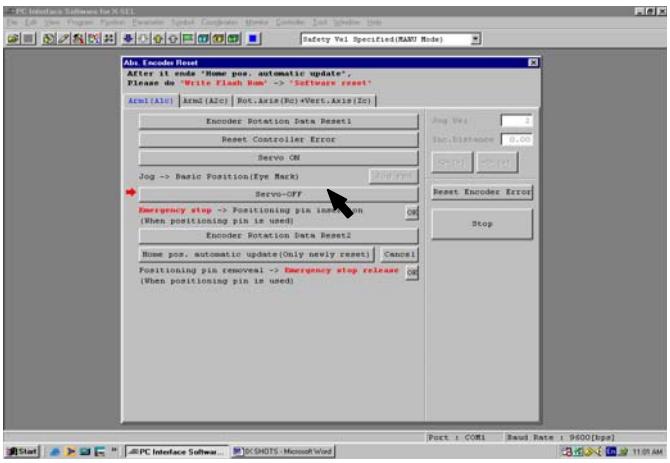

Servo OFF

(6) Press the emergency-stop switch.

(7) When performing an absolute reset of arm 1, set the adjustment jig (pin) on arm 1 to secure the arm in its reference position. You can move arm 2 when securing arm 1. When performing an absolute reset of arm 2, set the adjustment jig (pin) on arm 2 to secure the arm in its reference position. You can move arm 1 when securing arm 2.

- Set the jig after confirming that the emergency-stop switch is pressed.
- Set the jig after adjusting the arm to the reference position, using the positioning mark label as a guide.
- Arm 1 has a cover (not arm 2), which is fixed with setscrews. Remove the setscrews and detach the cover before setting the jig.
- It is recommended that an adjustment jig be used to perform an absolute reset. With arm 1 or 2, however, rotation data can be reset as long as a positioning precision of “center of positioning mark label ±1 graduation” is ensured.

Arm 1

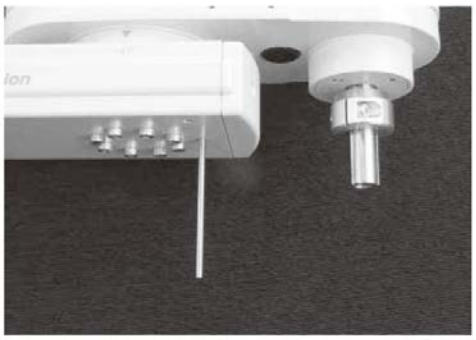

Arm 2

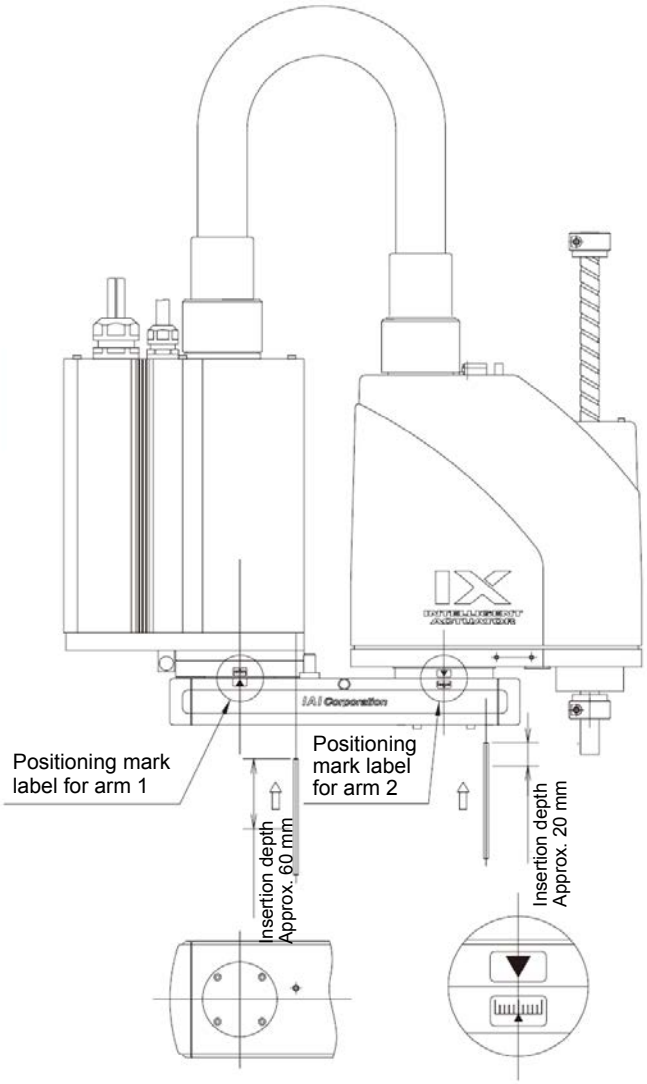

⚠ Warning

- Always press the emergency-stop switch before setting an adjustment jig. Failure to do so may cause the robot to malfunction and result in a serious accident.

(8) Click the “OK” button.

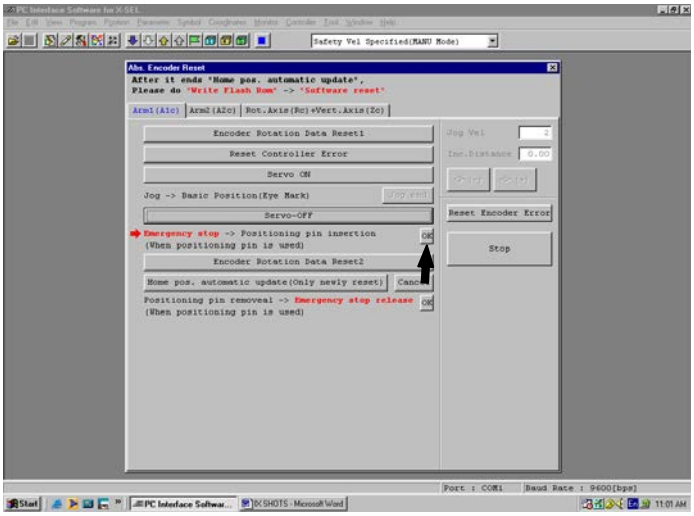

Confirmation

(9) Click the “Encoder Rotation Data Reset2” button.

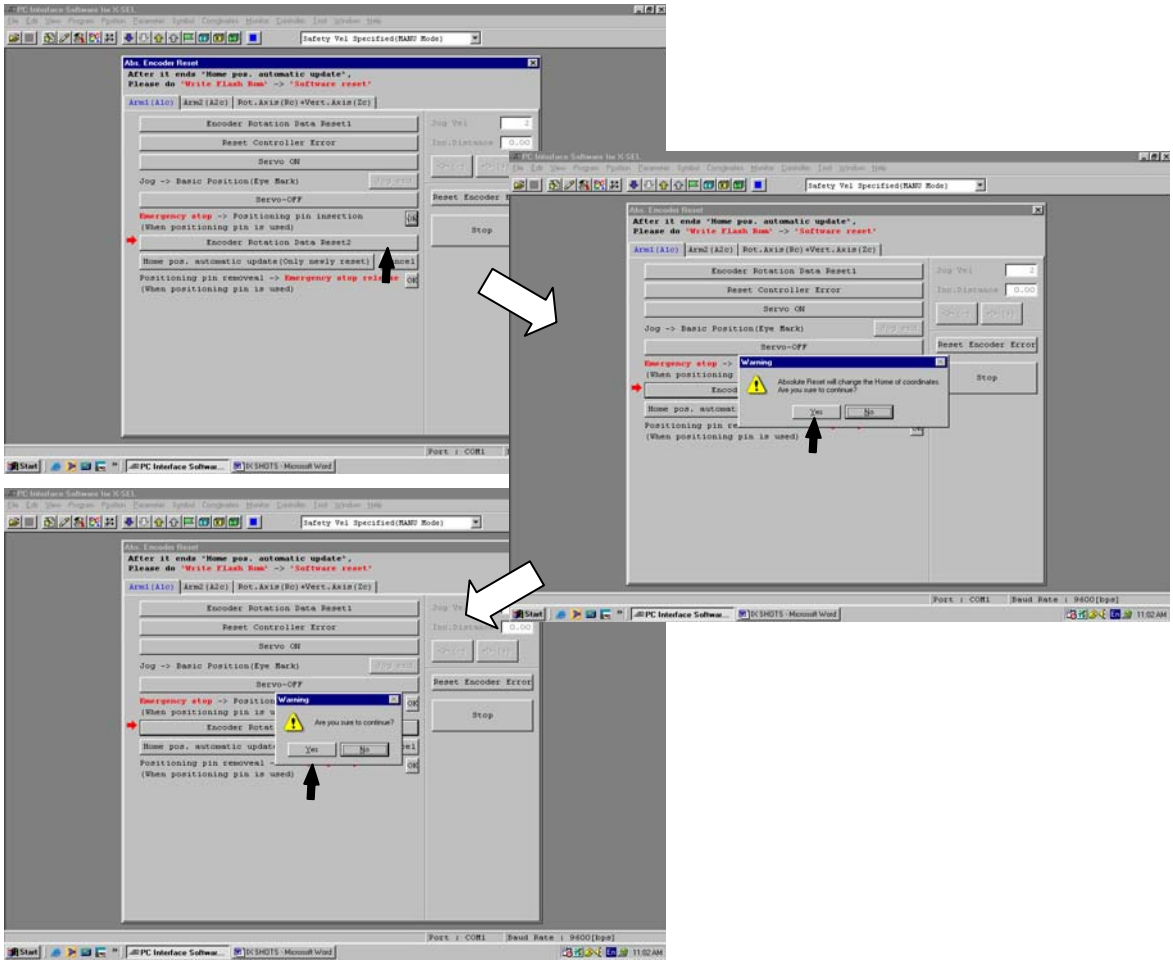

Encoder Multi-rotation Data Reset 2

(10) Remove the adjustment jig.
- If you are working on arm 1, install the cover and secure it with the setscrews (not required for arm 2).

(11) Release the emergency-stop switch.
(12) Click the “OK” button.

- An arrow is shown next to the “Home pos. automatic update” button. Do not set this item. (In particular, be sure this item is not set when performing an absolute reset without using a jig).
- If you have allowed the home preset value to be updated automatically by mistake, do not write the updated data to the flash ROM. Instead, perform a software reset. (After the software reset, the data will return to the original condition before the home preset value was automatically updated.)
- Always click the “OK” button after removing the jig and releasing the emergency-stop switch.

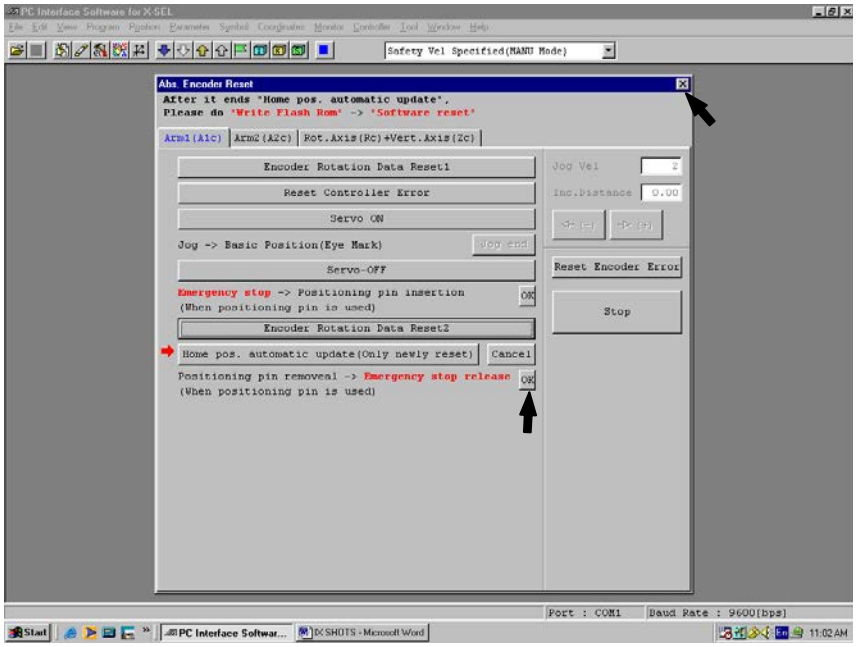

Confirmation

(13) Click “X” in the top right-hand corner to exit the absolute reset window.
- Once the absolute reset is complete, be sure to reset the software.

⚠ Warning

- Be careful not to perform a reset using an incorrect sequence, since it may cause the arm position to become offset.
- Update the home preset value only if any of the mechanical settings has been changed, such as after an arm has been replaced. (Changes relating to joints only)

13.8.4 Absolute Reset Procedure for the Rotational Axis + Vertical Axis

(1) Click “Encoder Rotation Data Reset1” button.

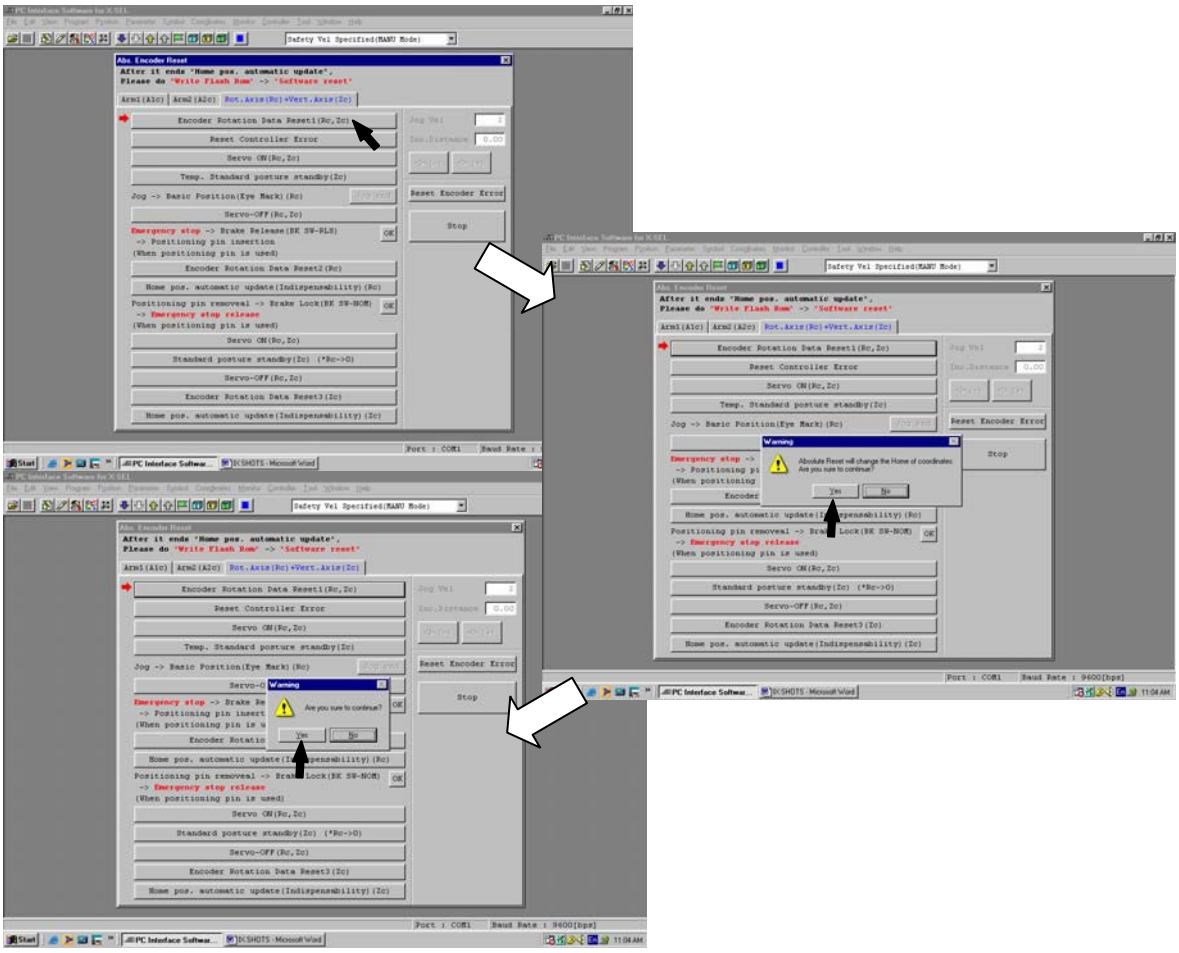

Encoder Multi-rotation Data Reset 1

(2) Click the “Reset Controller Error” button.

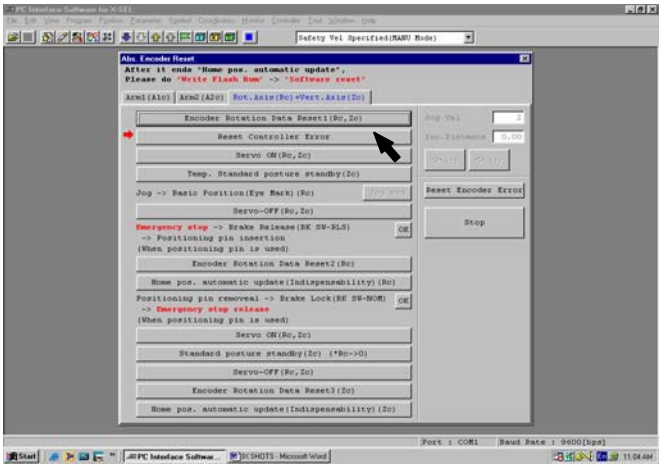

Controller Reset

(3) Click the “Servo ON” button.

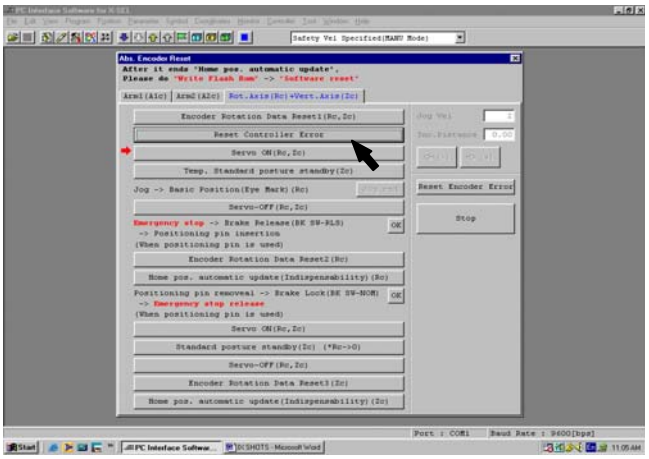

Servo ON

(4) Click the “Temp. Standard posture standby” button.

- The vertical axis returns to its home position. Exercise caution so as not to be injured by the axis during movement.

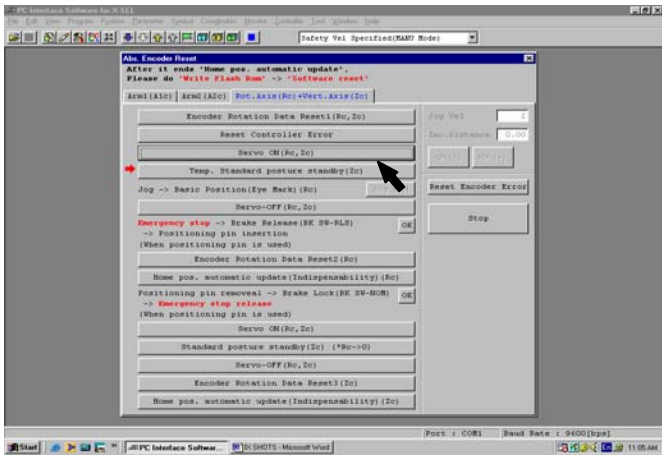

Standing By at Tentative Home Position

(5) Jog the rotational axis to the reference position (see reference position drawing in step 8), and click the “Jog end” button.

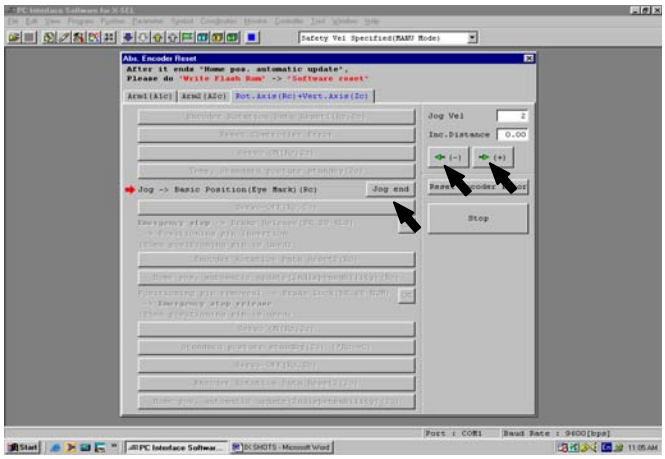

Jogging

(6) Click the “Servo-OFF” button.

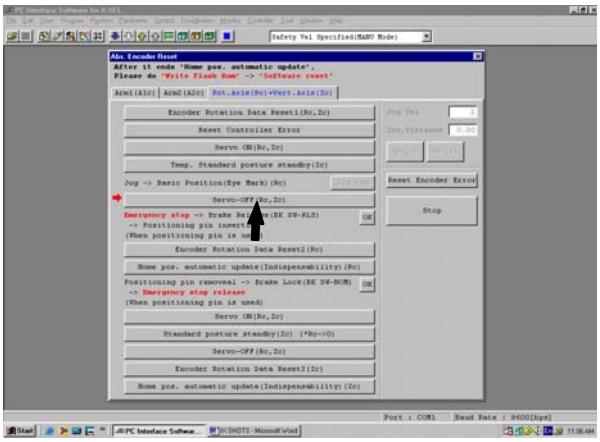

Servo OFF

(7) Press the emergency-stop switch.

(8) Affix the rotational axis at the reference position by setting the plate and pin of the adjustment jig as illustrated below.

- Set the jig after confirming that the emergency-stop switch is pressed.
- Set the jigs by using the positioning mark as a reference.
- Make sure the top surface of the stopper roughly matches in height with the bottom surface of arm 2.

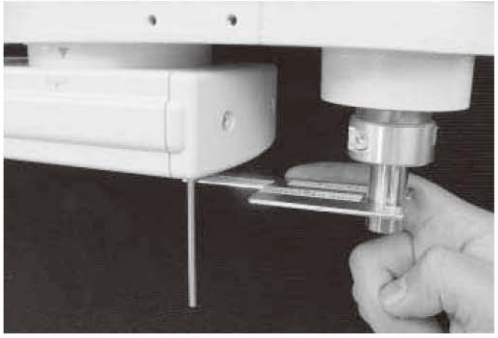

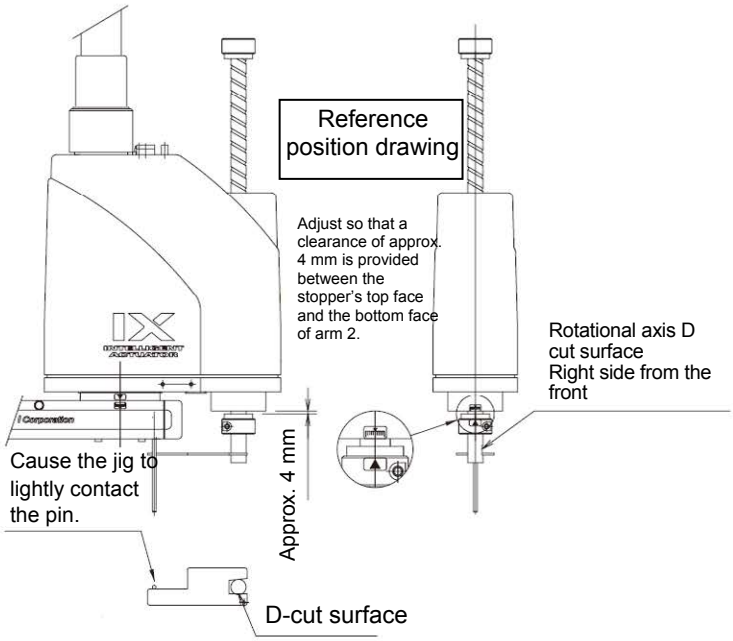

Down view

Wall mount specification

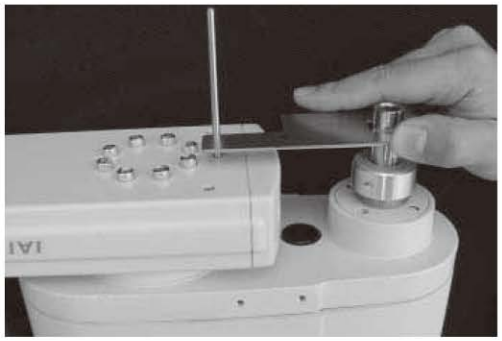

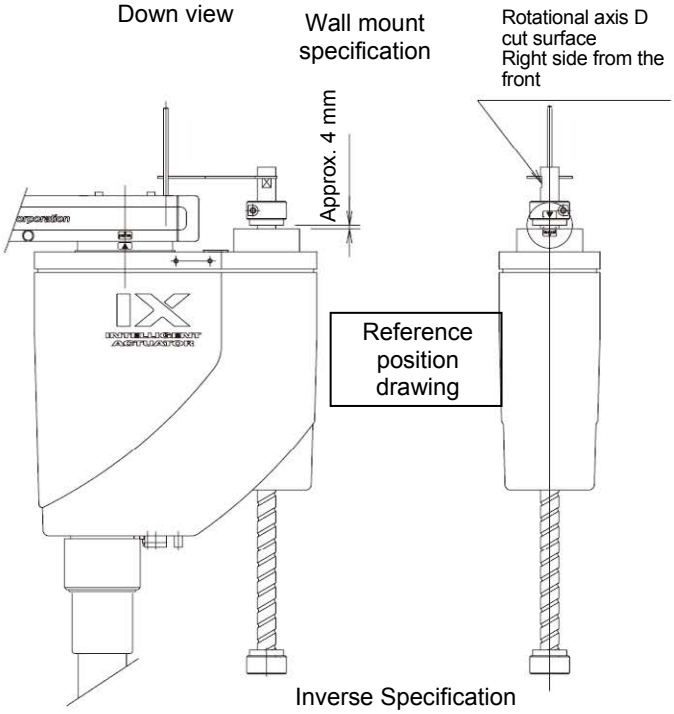

Inverse Specification

⚠ Warning

- Always press the emergency-stop switch before setting an adjustment jig. Failure to do so may cause the robot to malfunction and result in a serious accident.

(9) Click the “OK” button.

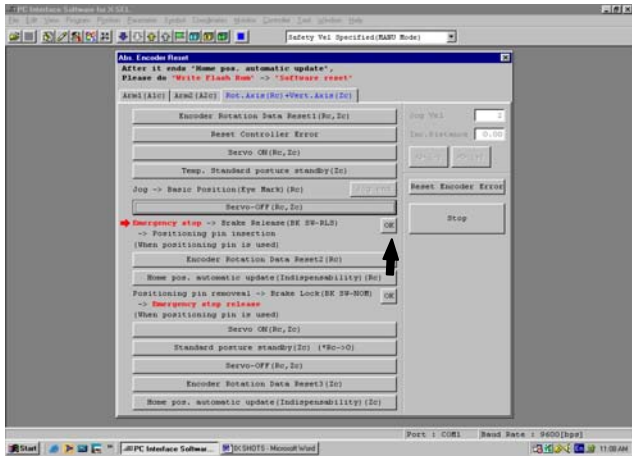

Confirmation

(10) Click the “Encoder Rotation Data Reset2” button.

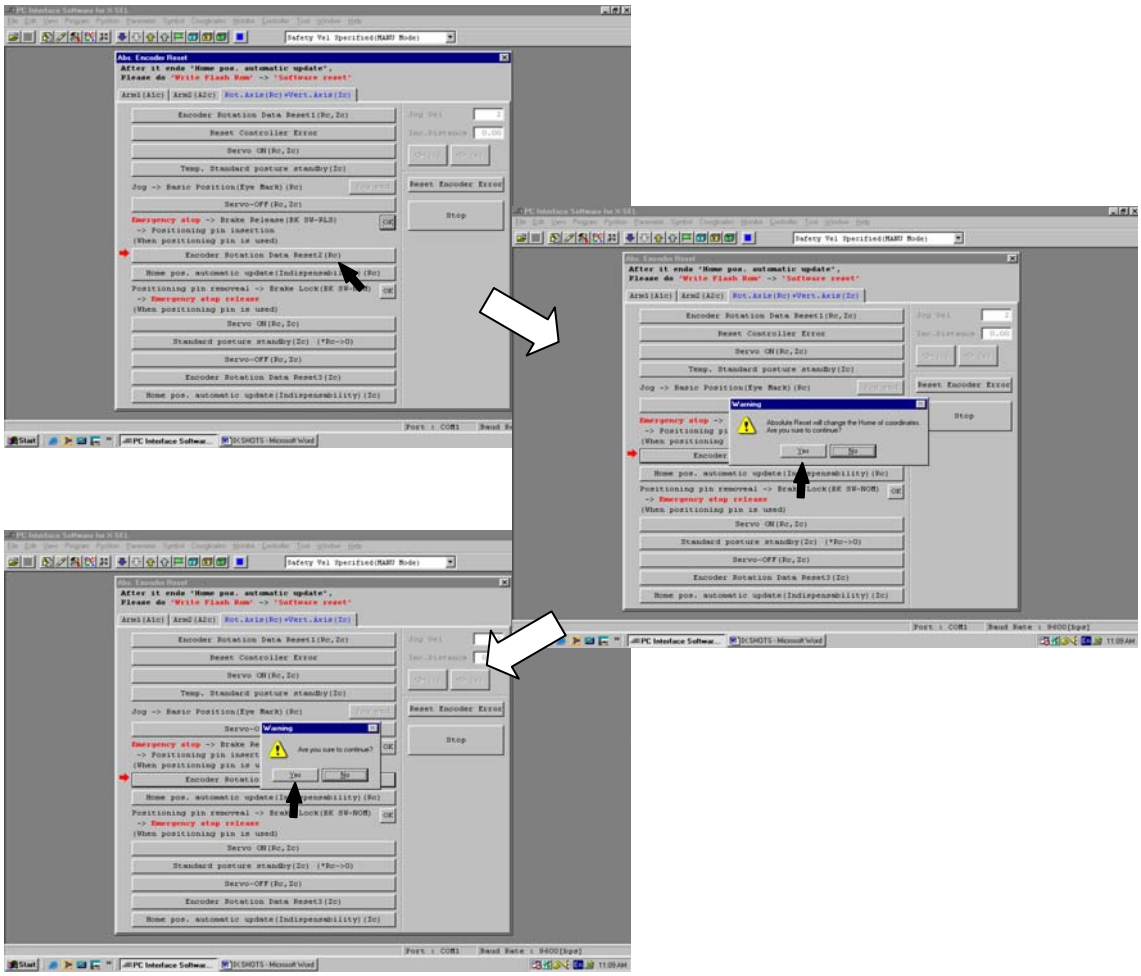

Encoder Multi-rotation Data Reset 2

(11) Click the “Home pos. automatic update” button.

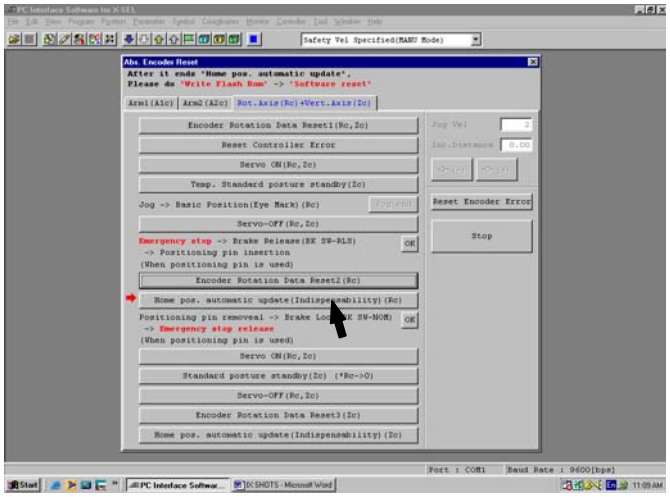

Automatic Refresh of Home Preset Value

(12) Remove the adjustment jig.
(13) Release the emergency-stop switch.
(14) Click the “OK” button.

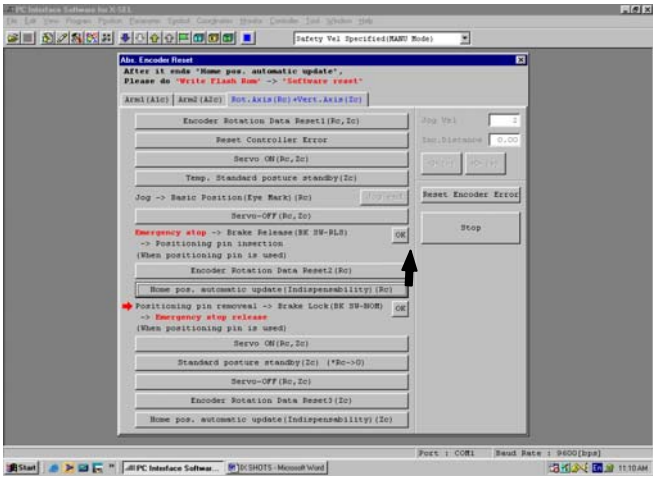

Confirmation

(15) Click the “Servo ON” button.

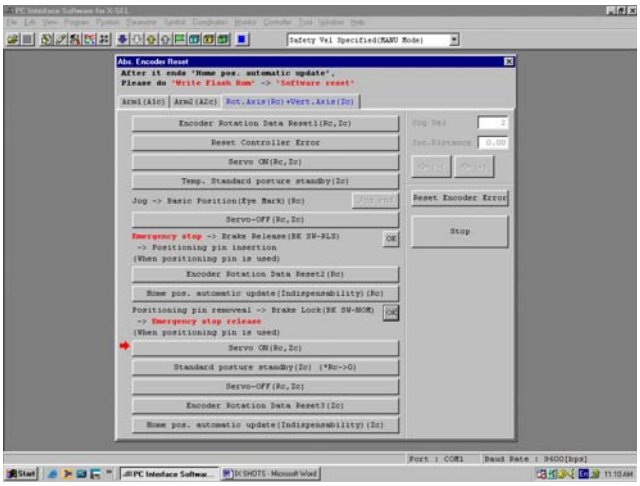

Confirmation

(16) Click the “Standard posture standby” button.

- The vertical axis returns to its home position. Exercise caution so as not to be injured by the axis during movement.

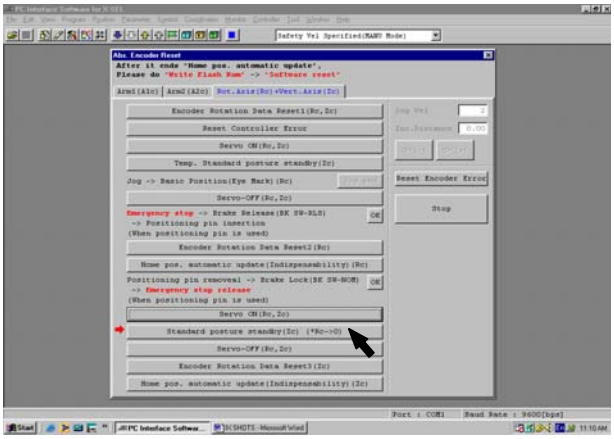

Standing By at Reference Posture

(17) Click the “Servo-OFF” button.

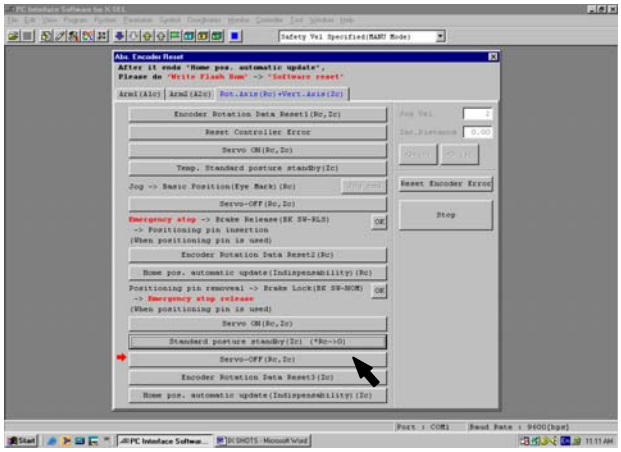

Servo OFF

(18) Click the “Encoder Rotation Data Reset3” button.

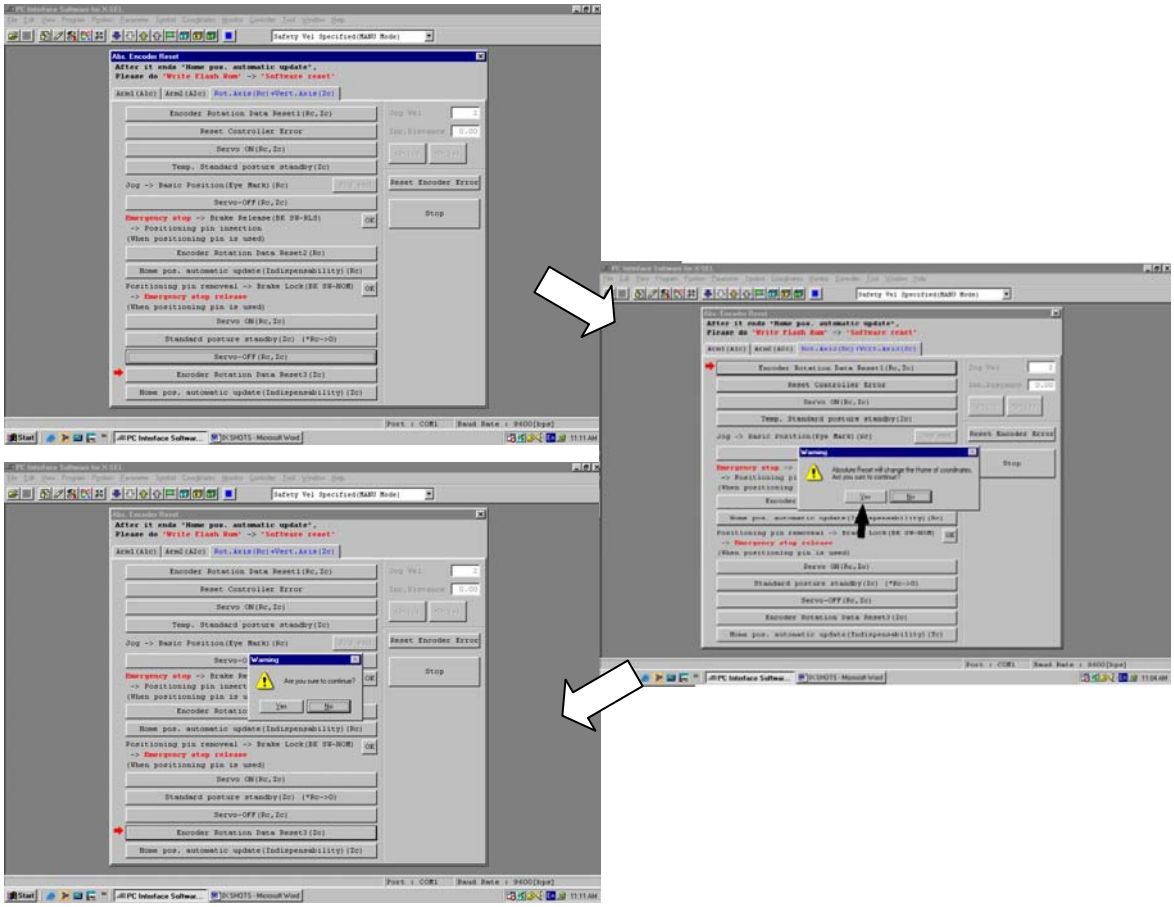

Encoder Multi-rotation Data Reset 3

(19) Click the “Home pos. automatic update” button, and then click “X” in the top right-hand corner to exit the absolute reset window.

•After the reset is completed, be sure to perform “Software reset.”

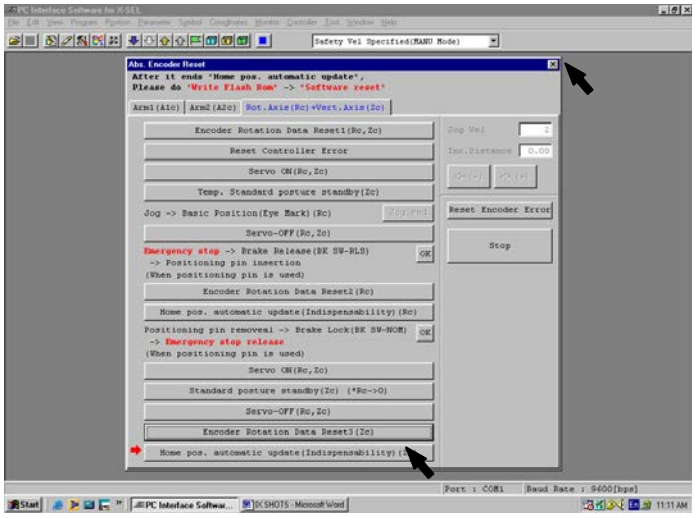

Automatic Refresh of Home Preset Value

14. Warranty

14.1 Warranty Period

One of the following periods, whichever is shorter:
- 18 months after shipment from our company
- 12 months after delivery to the specified location

14.2 Scope of Warranty

Our products are covered by warranty when all of the following conditions are met. Faulty products covered by warranty will be replaced or repaired free of charge:

(1) The breakdown or problem in question pertains to our product as delivered by us or our authorized dealer.

(2) The breakdown or problem in question occurred during the warranty period.

(3) The breakdown or problem in question occurred while the product was in use for an appropriate purpose under the conditions and environment of use specified in the operation manual and catalog.

(4) The breakdown of problem in question was caused by a specification defect or problem, or by a quality issue with our product.

Note that breakdowns due to any of the following reasons are excluded from the scope of warranty:
[1] Anything other than our product
[2] Modification or repair performed by a party other than us (unless we have approved such modification or repair)
[3] Anything that could not be easily predicted with the level of science and technology available at the time of shipment from our company
[4] A natural disaster, man-made disaster, incident or accident for which we are not liable
[5] Natural fading of paint or other symptoms of aging
[6] Wear, depletion or other expected result of use
[7] Operation noise, vibration or other subjective sensation not affecting function or maintenance

Note that the warranty only covers our product as delivered and that any secondary loss arising from a breakdown of our product is excluded from the scope of warranty.

14.3 Honoring the Warranty

As a rule, the product must be brought to us for repair under warranty.

14.4 Limited Liability

(1) We shall assume no liability for any special damage, consequential loss or passive loss such as a loss of expected profit arising from or in connection with our product.
(2) We shall not be liable for any program or control method created by the customer to operate our product or for the result of such program or control method.

14.5 Conditions of Conformance with Applicable Standards/Regulations, Etc., and Applications

(1) If our product is combined with another product or any system, device, etc., used by the customer, the customer must first check the applicable standards, regulations and/or rules. The customer is also responsible for confirming that such combination with our product conforms to the applicable standards, etc. In such a case we will not be liable for the conformance of our product with the applicable standards, etc.

(2) Our product is for general industrial use. It is not intended or designed for the applications specified below, which require a high level of safety. Accordingly, as a rule our product cannot be used in these applications. Contact us if you must use our product for any of these applications:

[1] Medical equipment pertaining to maintenance or management of human life or health
[2] A mechanism or mechanical equipment intended to move or transport people (such as a vehicle, railway facility or aviation facility)
[3] Important safety parts of mechanical equipment (such as safety devices)
[4] Equipment used to handle cultural assets, art or other irreplaceable items

(3) Contact us at the earliest opportunity if our product is to be used in any condition or environment that differs from what is specified in the catalog or operation manual.

14.6 Other Items Excluded from Warranty

The price of the product delivered to you does not include expenses associated with programming, the dispatch of engineers, etc. Accordingly, a separate fee will be charged in the following cases even during the warranty period:

[1] Guidance for installation/adjustment and witnessing of test operation
[2] Maintenance and inspection
[3] Technical guidance and education on operating/wiring methods, etc.
[4] Technical guidance and education on programming and other items related to programs

15. EC Declaration of Conformity

This product comes with EC Declaration of Conformity as it complies with Machinery Directive if Option CE is selected.

IAI Quality and Innovation

IAI CORPORATION
577-1 Obane, Shimizu-Ku, Shizuoka City, Shizuoka 424-0103 Japan
Phone +81-543-64-5105 Facsimile +81-543-64-5182

EC DECLARATION OF CONFORMITY

Manufacturer:

IAI CORPORATION
577-1 Obane, Shimizu-Ku, Shizuoka City, Shizuoka 424-0103 Japan

Authorized representative within the Community:

IAI Industrieroboter GmbH
Ober der Röth 4, D-65824 Schwalbach am Taunus, Germany

Hereby declares that the equipment described below
complies with the provisions of the below European Directives and the harmonized standards.

IX SCARA Robot
(IX series)

Models covered are shown at appendix 1,2,3, and 4 from the next page.

We can provide electronic data of relevant information on the partly completed machinery in response to a reasonable request by the national authorities.

And also we request that the partly completed machinery must not be put into service until the final machinery has been declared in conformity with the provisions of Machinery Directive.

- Machinery Directive: 2006/42/EC
  EN ISO 12100:2010, EN ISO 13849-1:2008,
  EN ISO 10218-1:2011

- EMC Directive: 2014/30/EU
  EN 55011: 2009/A1:2010, EN 61000-6-2: 2005,
  EN 61000-3-2: 2014, EN 61000-3-3: 2013
  EN61000-3: 2004/A1: 2012

- RoHS Directive: 2011/65/EU
  EN 50581: 2012

Done at Shizuoka, Japan,

On 3. Jun. , 2019

President Toru Ishida

ORIGINAL

Declaration of Conformity for IX Series Ver 003 Page 1 of 5

IAI
Quality and Innovation

IAI CORPORATION
577-1 Obane, Shimizu-Ku, Shizuoka City, Shizuoka 424-0103 Japan
Phone +81-543-64-5105 Facsimile +81-543-64-5182

Appendix 1

●Standard Type

Series	Type		Cable length		Controller Type		Option
IX -	NNN1205 NNN1505 NNN1805	-	3L 5L	-	T2	-	JY B CE
IX -	NNN2515 NNN3515 NNN5020 NNN5030 NNN6020 NNN6030 NNN7020 NNN7040 NNN8020 NNN8040	-	5L 10L	-	T1 T2	-	CE
IX -	NNN2515H NNN3515H NNN5020H NNN5030H NNN6020H NNN6030H NNN7020H NNN7040H NNN8020H NNN8040H	-	5L 10L	-	T2	-	JY CE KCS

●High Speed Type

Series	Type		Cable length		Controller Type		Option
IX -	NSN5016 NSN6016	-	5L 10L	-	T1 T2	-	CE
IX -	NSN5016H NSN6016H	-	5L 10L	-	T2	-	JY CE KCS

IAI
Quality and Innovation

IAI CORPORATION
577-1 Obane, Shimizu-Ku, Shizuoka City, Shizuoka 424-0103 Japan
Phone +81-543-64-5105 Facsimile +81-543-64-5182

Appendix 2

●Water and Dust resident Type

Series	Type		Cable length		Controller Type		Option
IX -	NNW2515 NNW3515 NNW5020 NNW5030 NNW6020 NNW6030 NNW7020 NNW7040 NNW8020 NNW8040	-	5L 10L	-	T1 T2	-	CE
IX -	NNW2515H NNW3515H NNW5020H NNW5030H NNW6020H NNW6030H NNW7020H NNW7040H NNW8020H NNW8040H	-	5L 10L	-	T2	-	JY CE KCS

●Wall mount Type

Series	Type		Cable length		Controller Type		Option
IX -	TNN3015 TNN3515	-	5L 10L	-	T1 T2	-	CE
IX -	TNN3015H TNN3515H	-	5L 10L	-	T2	-	JY CE KCS

●Wall mount / Inverse Type

Series	Type		Cable length		Controller Type		Option
IX -	UNN3015 UNN3515	-	5L 10L	-	T1 T2	-	CE
IX -	UNN3015H UNN3515H	-	5L 10L	-	T2	-	JY CE KCS

IAI
Quality and Innovation

IAI CORPORATION
577-1 Obane, Shimizu-Ku, Shizuoka City, Shizuoka 424-0103 Japan
Phone +81-543-64-5105 Facsimile +81-543-64-5182

Appendix 3

●Ceiling mount Type

Series	Type		Cable length		Controller Type		Option
IX -	HNN5020 HNN6020 HNN7020 HNN7040 HNN8020 HNN8040	-	5L 10L	-	T1 T2	-	CE
IX -	HNN5020H HNN6020H HNN7020H HNN7040H HNN8020H HNN8040H	-	5L 10L	-	T2	-	JY CE KCS

●Ceiling mount / Inverse Type

Series	Type		Cable length		Controller Type		Option
IX -	INN5020 INN6020 INN7020 INN7040 INN8020 INN8040	-	5L 10L	-	T1 T2	-	CE
IX -	INN5020H INN6020H INN7020H INN7040H INN8020H INN8040H	-	5L 10L	-	T2	-	JY CE KCS

IAI
Quality and Innovation

IAI CORPORATION
577-1 Obane, Shimizu-Ku, Shizuoka City, Shizuoka 424-0103 Japan
Phone +81-543-64-5105 Facsimile +81-543-64-5182

Appendix 4

●Creenroom Type

Series	Type		Cable length		Controller Type		Option
IX -	NNC1205 NNC1505 NNC1805	-	3L 5L	-	T2	-	JY B CE
IX -	NNC2515 NNC3515 NNC5020 NNC5030 NNC6020 NNC6030 NNC7020 NNC7040 NNC8020 NNC8040	-	5L 10L	-	T1 T2	-	CE
IX -	NNC2515H NNC3515H NNC5020H NNC5030H NNC6020H NNC6030H NNC7020H NNC7040H NNC8020H NNC8040H	-	5L 10L	-	T2	-	JY CE KCS

●Special Order Type

Series	Type		Cable length		Controller Type		Special Order		CE Option
IX -	NNN2522	-	3L	-	T1	-	SP	-	CE
IX -	NNN2522	-	3L	-	T1	-	SP2	-	CE
IX -	NNC3515	-	5L	-	T1	-	SP	-	CE
IX -	NNC3515	-	10L	-	T1	-	SP	-	CE
IX -	NNN3515	-	5L	-	T2	-	SP	-	CE
IX -	NNN3515	-	10L	-	T2	-	SP	-	CE
IX -	NSN6016	-	5L	-	T2	-	SP	-	CE
IX -	NSN6016	-	10L	-	T2	-	SP	-	CE
IX -	HSN6020	-	5L	-	T2	-	SP	-	CE
IX -	HSN6020	-	10L	-	T2	-	SP	-	CE

※ **Every CE and KCs is set by option.**

Change History

Revision Date	Description of Revision
August 2010	First edition
April 2011	Second edition P. 27 Added options “JY (Joint cable specification)”
May 2011	Third edition A page for CE Marking added
March 2012	Fourth edition P. 1 to 7 Contents added and changed in Safety Guide P. 8 Precautions in Handling Note “Certainly attach the Horizontal Articulated Robot by following this operation manual.” added P. 29, 31 Brake voltage source capacity 20W added to specifications P. 36 Brake voltage source capacity from 20W to 30W → changed to 20W P. 50 Caution notes added telling to go to see the doctor to have an appropriate treatment when the grease got into an eye P. 69, 70 Contents changed in 14. Warranty
August 2012	Fifth edition 9.1 Installation Posture added
January 2013	Sixth edition P. 51 Grease applied to ball screw spline changed to Multemp LRL No. 3
July 2013	Seventh edition • A page of CE Marking deleted and page for International Standards Compliances added. • Overall Revised 13. Maintenance and Inspection
February 2014	Eighth edition P. 28, 30 Values changed for Axis 3 (vertical axis) Push Force Control Range
July 2015	Ninth edition P. 25 to 28 5.4 Cable Joint Type (Model: JY) added
September 2016	9B edition P. 43 Correction made to brake power source from 45W to 30W.

Revision Date	Description of Revision
March 2017	9C edition P. 55 Note corrected AB-6 → AB-3
December 2018	9D edition P. 54, 56 Grease AFE → AFE-CA Grease AFG deleted
July 2019	9E edition P. 83 EC Declaration of Conformity added
June 2020	9F edition P. 29 Connector and PIO flat cable model added
January 2021	9G edition P. 41 Change made to voltage source capacity for brake power supply 9W → 7W

Manual No.: ME3705-9G (January 2021)

Quality and Innovation

IAI Corporation

Head Office: 577-1 Obane Shimizu-KU Shizuoka City Shizuoka 424-0103, Japan
TEL +81-54-364-5105 FAX +81-54-364-2589
website: www.iai-robot.co.jp/

Technical Support available in USA, Europe and China

IAI America, Inc.

Head Office: 2690 W. 237th Street, Torrance, CA 90505
TEL (310) 891-6015 FAX (310) 891-0815
Chicago Office: 110 East State Parkway, Schaumburg, IL 60173
TEL (847) 908-1400 FAX (847) 908-1399
Atlanta Office: 1220 Kennestone Circle, Suite 108, Marietta, GA 30066
TEL (678) 354-9470 FAX (678) 354-9471
website: www.intelligentactuator.com

IAI Industrieroboter GmbH

Ober der Röth 4, D-65824 Schwalbach am Taunus, Germany
TEL 06196-88950 FAX 06196-889524
website: www.iai-gmbh.de

IAI (Shanghai) Co., Ltd.

SHANGHAI JIAHUA BUSINESS CENTER A8-303, 808, Hongqiao Rd. Shanghai 200030, China
TEL 021-6448-4753 FAX 021-6448-3992
website: www.iai-robot.com

IAI Robot (Thailand) Co., Ltd.

825 PhairojKijja Tower 7th Floor, Debaratana RD., Bangna-Nuea, Bangna, Bangkok 10260, Thailand
TEL +66-2-361-4458 FAX +66-2-361-4456
website: www.iai-robot.co.th

The information contained in this document is subject to change without notice for purposes of product improvement.
Copyright © 2021. Jan. IAI Corporation. All rights reserved.

21.01.000