ROBO CYLINDER

ROBO Cylinder
RCP4 Actuators
Gripper Type

Instruction Manual

Third Edition

Slide Type: GRSML, GRSLL, GRSWL
Lever Type: GRLM, GRLL, GRLW

IAI Corporation

Please Read Before Use

Thank you for purchasing our product.

This instruction manual explains the handling methods, structure and maintenance of this product, providing the information you need in order to use the product safely.

Before using the product, be sure to read this manual and fully understand the contents explained herein to ensure safe use of the product.

Please downloaded the user's manual from our website.
You can download it free of charge. User registration is required for the first time downloading.
URL : www.iai-robot.co.jp/data_dl/CAD_MANUAL/

When using the product, print out of the necessary portions of the relevant manual, or please display it on your computer, tablet terminal, etc. so that you can check it immediately.

After reading the instruction manual, keep it in a convenient place so that whoever is handling the product can refer to it quickly when necessary.

[Important]

- This instruction manual is an original document dedicated for this product.
- This product cannot be used in ways not shown in this instruction manual. IAI shall not be liable for any result whatsoever arising from the use of the product in any other way than what is noted in the manual.
- The information contained in this instruction manual is subject to change without notice for the purpose of product improvement.
- If any issues arise regarding the information contained in this instruction manual, contact our customer center or the nearest sales office.
- Use or reproduction of this instruction manual in full or in part without permission is prohibited.
- The company names, names of products and trademarks of each company shown in the text are registered trademarks.

Table of Contents

Safety Guide 1
Caution in Handling 8
International Standards Compliances 10
Names of the Parts 11
1. Slide Type (GRSM, GRSL, GRSW) 11
2. Lever Type (GRLM, GRLL, GRLW) 11

1. Specifications Check 12
1.1 Checking the Product 12
1.1.1 Parts 12
1.1.2 Instruction Manuals for the Controllers Related to this Product 12
1.1.3 How to Read the Model Nameplate 12
1.1.4 How to Read the Model Number 13
1.2 Specifications 14
1.2.1 Common 14
1.2.2 Relation between the Current Limit Value and the Grip Force 15
1.2.3 Allowable Static Moments of the Slide Type 18
1.2.4 Duty in Continuous Operation 19
1.3 Operating Conditions 20
1.3.1 Grip Force 20
1.4 Option 27
1.4.1 Reversed-home Specification (Model: NM) 27
1.4.2 Actuator Cable 1m Specification (Model: ACI) 27
1.4.3 Anti-Rust Black Coating (Model: AR) 27
1.5 Motor • Encoder Cables 28
1.5.1 Motor • Encoder Integrated Cables 28
1.5.2 Motor • Encoder Integrated Cables Robot Type 29
2. Installation 30
2.1 Transportation 30
2.2 Installation and Storage • Preservation Environment 32
2.3 How to Install 33
2.3.1 Installation 33
2.3.2 Installation of the Main Unit 34
2.3.3 How to Attach the Finger Attachment 40
3. Connecting with the Controller 47
4. Operation 52
4.1 Operation of the Fingers 52
4.2 Release of the Gripped Work Piece 53
5. Maintenance and Inspection 54
5.1 Inspection Items and Schedule 54
5.2 Visually Inspecting the Exterior 54
5.3 Cleaning 54
5.4 Grease Supply 55
5.4.1 Applicable Greases for the Guide, Finger and Finger Guide 55
5.4.2 Gear Area 57

6. External Dimensions 59
6.1 GRSML 59
6.2 GRSLL 60
6.3 GRSWL 61
6.4 GRLM 62
6.5 GRLL 63
6.6 GRLW 64
7. Warranty 65
7.1 Warranty Period 65
7.2 Scope of the Warranty 65
7.3 Honoring the Warranty 65
7.4 Limited Liability 65
7.5 Conditions of Conformance with Applicable Standards/Regulations, Etc., and Applications 66
7.6 Other Items Excluded from Warranty 66
Change History 67

Safety Guide

“Safety Guide” has been written to use the machine safely and so prevent personal injury or property damage beforehand. Make sure to read it 1before the operation of this product.

Safety Precautions for Our Products

The common safety precautions for the use of any of our robots in each operation.

No.	Operation Description	Description
1	Model Selection	● This product has not been planned and designed for the application where high level of safety is required, so the guarantee of the protection of human life is impossible. Accordingly, do not use it in any of the following applications. 1) Medical equipment used to maintain, control or otherwise affect human life or physical health. 2) Mechanisms and machinery designed for the purpose of moving or transporting people (For vehicle, railway facility or air navigation facility) 3) Important safety parts of machinery (Safety device, etc.) ● Do not use the product outside the specifications. Failure to do so may considerably shorten the life of the product. ● Do not use it in any of the following environments. 1) Location where there is any inflammable gas, inflammable object or explosive 2) Place with potential exposure to radiation 3) Location with the ambient temperature or relative humidity exceeding the specification range 4) Location where radiant heat is added from direct sunlight or other large heat source 5) Location where condensation occurs due to abrupt temperature changes 6) Location where there is any corrosive gas (sulfuric acid or hydrochloric acid) 7) Location exposed to significant amount of dust, salt or iron powder 8) Location subject to direct vibration or impact ● For an actuator used in vertical orientation, select a model which is equipped with a brake. If selecting a model with no brake, the moving part may drop when the power is turned OFF and may cause an accident such as an injury or damage on the work piece.

No.	Operation Description	Description
2	Transportation	● When carrying a heavy object, do the work with two or more persons or utilize equipment such as crane. ● When the work is carried out with 2 or more persons, make it clear who is to be the leader and who to be the follower(s) and communicate well with each other to ensure the safety of the workers. ● When in transportation, consider well about the positions to hold, weight and weight balance and pay special attention to the carried object so it would not get hit or dropped. ● Transport it using an appropriate transportation measure. The actuators available for transportation with a crane have eyebolts attached or there are tapped holes to attach bolts. Follow the instructions in the instruction manual for each model. ● Do not step or sit on the package. ● Do not put any heavy thing that can deform the package, on it. ● When using a crane capable of 1t or more of weight, have an operator who has qualifications for crane operation and sling work. ● When using a crane or equivalent equipments, make sure not to hang a load that weighs more than the equipment's capability limit. ● Use a hook that is suitable for the load. Consider the safety factor of the hook in such factors as shear strength. ● Do not get on the load that is hung on a crane. ● Do not leave a load hung up with a crane. ● Do not stand under the load that is hung up with a crane.
3	Storage and Preservation	● The storage and preservation environment conforms to the installation environment. However, especially give consideration to the prevention of condensation. ● Store the products with a consideration not to fall them over or drop due to an act of God such as earthquake.
4	Installation and Start	(1) Installation of Robot Main Body and Controller, etc. ● Make sure to securely hold and fix the product (including the work part). A fall, drop or abnormal motion of the product may cause a damage or injury. Also, be equipped for a fall-over or drop due to an act of God such as earthquake. ● Do not get on or put anything on the product. Failure to do so may cause an accidental fall, injury or damage to the product due to a drop of anything, malfunction of the product, performance degradation, or shortening of its life. ● When using the product in any of the places specified below, provide a sufficient shield. 1) Location where electric noise is generated 2) Location where high electrical or magnetic field is present 3) Location with the mains or power lines passing nearby 4) Location where the product may come in contact with water, oil or chemical droplets

No.	Operation Description	Description
4	Installation and Start	(2) Cable Wiring ● Use our company's genuine cables for connecting between the actuator and controller, and for the teaching tool. ● Do not scratch on the cable. Do not bend it forcibly. Do not pull it. Do not coil it around. Do not insert it. Do not put any heavy thing on it. Failure to do so may cause a fire, electric shock or malfunction due to leakage or continuity error. ● Perform the wiring for the product, after turning OFF the power to the unit, so that there is no wiring error. ● When the direct current power (+24V) is connected, take the great care of the directions of positive and negative poles. If the connection direction is not correct, it might cause a fire, product breakdown or malfunction. ● Connect the cable connector securely so that there is no disconnection or looseness. Failure to do so may cause a fire, electric shock or malfunction of the product. ● Never cut and/or reconnect the cables supplied with the product for the purpose of extending or shortening the cable length. Failure to do so may cause the product to malfunction or cause fire.
		(3) Grounding ● The grounding operation should be performed to prevent an electric shock or electrostatic charge, enhance the noise-resistance ability and control the unnecessary electromagnetic radiation. ● For the ground terminal on the AC power cable of the controller and the grounding plate in the control panel, make sure to use a twisted pair cable with wire thickness 0.5mm^2 (AWG20 or equivalent) or more for grounding work. For security grounding, it is necessary to select an appropriate wire thickness suitable for the load. Perform wiring that satisfies the specifications (electrical equipment technical standards). ● Perform Class D Grounding (former Class 3 Grounding with ground resistance 100Ω or below).

No.	Operation Description	Description
4	Installation and Start	(4) Safety Measures ● When the work is carried out with 2 or more persons, make it clear who is to be the leader and who to be the follower(s) and communicate well with each other to ensure the safety of the workers. ● When the product is under operation or in the ready mode, take the safety measures (such as the installation of safety and protection fence) so that nobody can enter the area within the robot's movable range. When the robot under operation is touched, it may result in death or serious injury. ● Make sure to install the emergency stop circuit so that the unit can be stopped immediately in an emergency during the unit operation. ● Take the safety measure not to start up the unit only with the power turning ON. Failure to do so may start up the machine suddenly and cause an injury or damage to the product. ● Take the safety measure not to start up the machine only with the emergency stop cancellation or recovery after the power failure. Failure to do so may result in an electric shock or injury due to unexpected power input. ● When the installation or adjustment operation is to be performed, give clear warnings such as "Under Operation; Do not turn ON the power!" etc. Sudden power input may cause an electric shock or injury. ● Take the measure so that the work part is not dropped in power failure or emergency stop. ● Wear protection gloves, goggle or safety shoes, as necessary, to secure safety. ● Do not insert a finger or object in the openings in the product. Failure to do so may cause an injury, electric shock, damage to the product or fire. ● When releasing the brake on a vertically oriented actuator, exercise precaution not to pinch your hand or damage the work parts with the actuator dropped by gravity.
5	Teaching	● When the work is carried out with 2 or more persons, make it clear who is to be the leader and who to be the follower(s) and communicate well with each other to ensure the safety of the workers. ● Perform the teaching operation from outside the safety protection fence, if possible. In the case that the operation is to be performed unavoidably inside the safety protection fence, prepare the "Stipulations for the Operation" and make sure that all the workers acknowledge and understand them well. ● When the operation is to be performed inside the safety protection fence, the worker should have an emergency stop switch at hand with him so that the unit can be stopped any time in an emergency. ● When the operation is to be performed inside the safety protection fence, in addition to the workers, arrange a watchman so that the machine can be stopped any time in an emergency. Also, keep watch on the operation so that any third person can not operate the switches carelessly. ● Place a sign "Under Operation" at the position easy to see. ● When releasing the brake on a vertically oriented actuator, exercise precaution not to pinch your hand or damage the work parts with the actuator dropped by gravity. * Safety protection Fence : In the case that there is no safety protection fence, the movable range should be indicated.

No.	Operation Description	Description
6	Trial Operation	● When the work is carried out with 2 or more persons, make it clear who is to be the leader and who to be the follower(s) and communicate well with each other to ensure the safety of the workers. ● After the teaching or programming operation, perform the check operation one step by one step and then shift to the automatic operation. ● When the check operation is to be performed inside the safety protection fence, perform the check operation using the previously specified work procedure like the teaching operation. ● Make sure to perform the programmed operation check at the safety speed. Failure to do so may result in an accident due to unexpected motion caused by a program error, etc. ● Do not touch the terminal block or any of the various setting switches in the power ON mode. Failure to do so may result in an electric shock or malfunction.
7	Automatic Operation	● Check before starting the automatic operation or rebooting after operation stop that there is nobody in the safety protection fence. ● Before starting automatic operation, make sure that all peripheral equipment is in an automatic-operation-ready state and there is no alarm indication. ● Make sure to operate automatic operation start from outside of the safety protection fence. ● In the case that there is any abnormal heating, smoke, offensive smell, or abnormal noise in the product, immediately stop the machine and turn OFF the power switch. Failure to do so may result in a fire or damage to the product. ● When a power failure occurs, turn OFF the power switch. Failure to do so may cause an injury or damage to the product, due to a sudden motion of the product in the recovery operation from the power failure.

No.	Operation Description	Description
8	Maintenance and Inspection	● When the work is carried out with 2 or more persons, make it clear who is to be the leader and who to be the follower(s) and communicate well with each other to ensure the safety of the workers. ● Perform the work out of the safety protection fence, if possible. In the case that the operation is to be performed unavoidably inside the safety protection fence, prepare the “Stipulations for the Operation” and make sure that all the workers acknowledge and understand them well. ● When the work is to be performed inside the safety protection fence, basically turn OFF the power switch. ● When the operation is to be performed inside the safety protection fence, the worker should have an emergency stop switch at hand with him so that the unit can be stopped any time in an emergency. ● When the operation is to be performed inside the safety protection fence, in addition to the workers, arrange a watchman so that the machine can be stopped any time in an emergency. Also, keep watch on the operation so that any third person can not operate the switches carelessly. ● Place a sign “Under Operation” at the position easy to see. ● For the grease for the guide or ball screw, use appropriate grease according to the instruction manual for each model. ● Do not perform the dielectric strength test. Failure to do so may result in a damage to the product. ● When releasing the brake on a vertically oriented actuator, exercise precaution not to pinch your hand or damage the work parts with the actuator dropped by gravity. ● The slider or rod may get misaligned OFF the stop position if the servo is turned OFF. Be careful not to get injured or damaged due to an unnecessary operation. ● Pay attention not to lose the cover or untightened screws, and make sure to put the product back to the original condition after maintenance and inspection works. Use in incomplete condition may cause damage to the product or an injury. * Safety protection Fence : In the case that there is no safety protection fence, the movable range should be indicated.
9	Modification and Dismantle	● Do not modify, disassemble, assemble or use of maintenance parts not specified based at your own discretion.
10	Disposal	● When the product becomes no longer usable or necessary, dispose of it properly as an industrial waste. ● When removing the actuator for disposal, pay attention to drop of components when detaching screws. ● Do not put the product in a fire when disposing of it. The product may burst or generate toxic gases.
11	Other	● Do not come close to the product or the harnesses if you are a person who requires a support of medical devices such as a pacemaker. Doing so may affect the performance of your medical device. ● See Overseas Specifications Compliance Manual to check whether complies if necessary. ● For the handling of actuators and controllers, follow the dedicated instruction manual of each unit to ensure the safety. ● Using the devise in a way not indicated by IAI may lose the protection performance equipped to the device.

Alert Indication

The safety precautions are divided into “Danger”, “Warning”, “Caution” and “Notice” according to the warning level, as follows, and described in the instruction manual for each model.

Level	Degree of Danger and Damage	Symbol
Danger	This indicates an imminently hazardous situation which, if the product is not handled correctly, will result in death or serious injury.	Danger
Warning	This indicates a potentially hazardous situation which, if the product is not handled correctly, could result in death or serious injury.	Warning
Caution	This indicates a potentially hazardous situation which, if the product is not handled correctly, may result in minor injury or property damage.	Caution
Notice	This indicates lower possibility for the injury, but should be kept to use this product properly.	Notice

Caution in Handling

1. Make sure to follow the usage condition, environment and specification range of the product.
   In case it is not secured, it may cause a drop in performance or malfunction of the product.

2. Do not conduct any treatment or operation that is not stated in this instruction manual.

3. It is recommended to apply our products for the wiring between the actuator and the controller.

4. Do not attempt to establish the settings for the speed and acceleration/deceleration above the maximum specification.
   An operation with speed and acceleration/deceleration beyond the allowable range may cause an abnormal noise, vibration, malfunction or shortened life.
   In the case of interpolated operation of combined axes, the speed and acceleration/deceleration settings should correspond to the minimum values among all combined axes.

5. Set the allowable moment within the allowable range.
   If the robot is operated under a load equal to or greater than the allowable moment, abnormal noise or vibration, failure, or shorter life may result.
   If it is extreme, flaking may occur on the guide.

6. When the work piece removal is required at the power OFF, do not attempt to pull off the work piece forcefully to remove it.
   Remove the work piece either by twisting the open/close screw or detaching one side of the finger attachment. Pulling off the work piece forcefully may cause damage to the product.
   [Refer to 4.2, “Release of the Gripped Work Piece”]

7. Remove the gripped work piece when the device would not be used for long time.
   Leaving the product with a work piece being held for a long term may drop the performance or give a bad impact to the guide.

8. Make sure to attach the actuator properly by following this instruction manual.
   Using the product with the actuator not being certainly retained or affixed may cause abnormal noise, vibration, malfunction or shorten the product life.

9. In case of removing the grease applied on the fingers and finger guides after delivery, make sure to implement a rust prevention treatment.

There is grease applied on the fingers and finger guides at the delivery for rust prevention treatment.
The fingers and finger guides may gather rust if the grease is wiped away.
Also, have grease or an anti-rust agent applied on the fingers and finger guides regularly.
[Refer to 5.4.1 Applicable Greases for the Guide, Finger and Finger Guide in 5.4 Grease Supply]

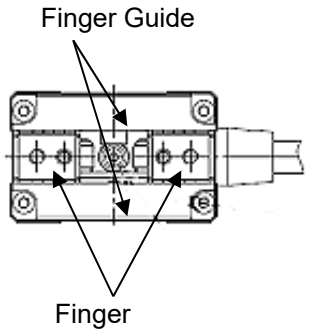

International Standards Compliances

This actuator complies with the following overseas standard.
Refer to Overseas Standard Compliance Manual (ME0287) for more detailed information.

RoHS3 Directive	CE Marking
○	Preparing for compliance

Names of the Parts

1. Slide Type (GRSML, GRSLL, GRSWL)

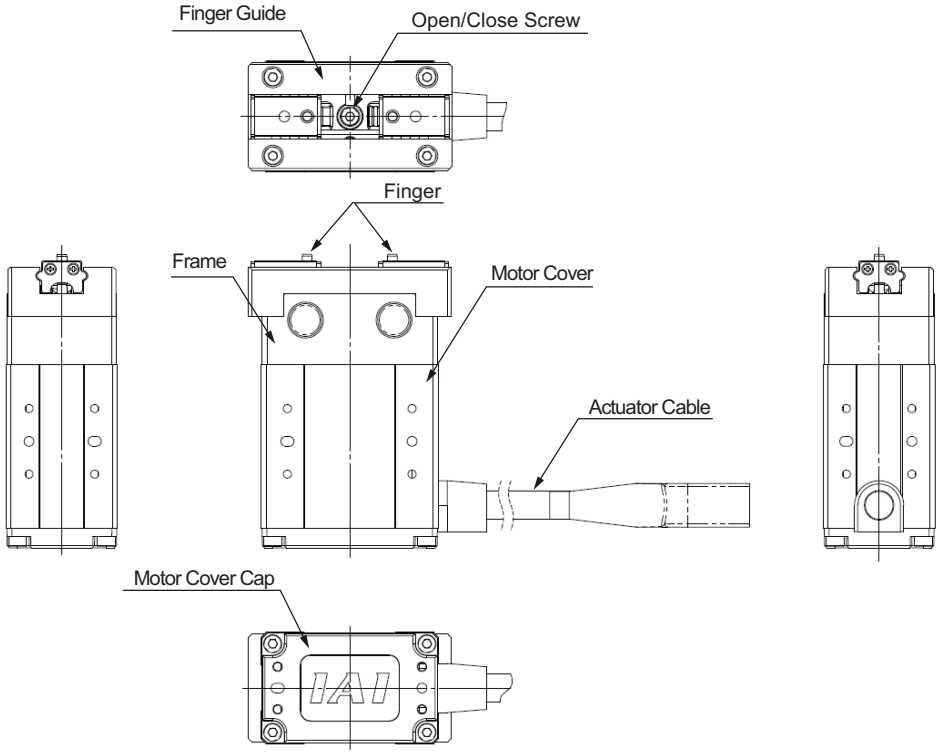

2. Lever Type (GRLM, GRLL, GRLW)

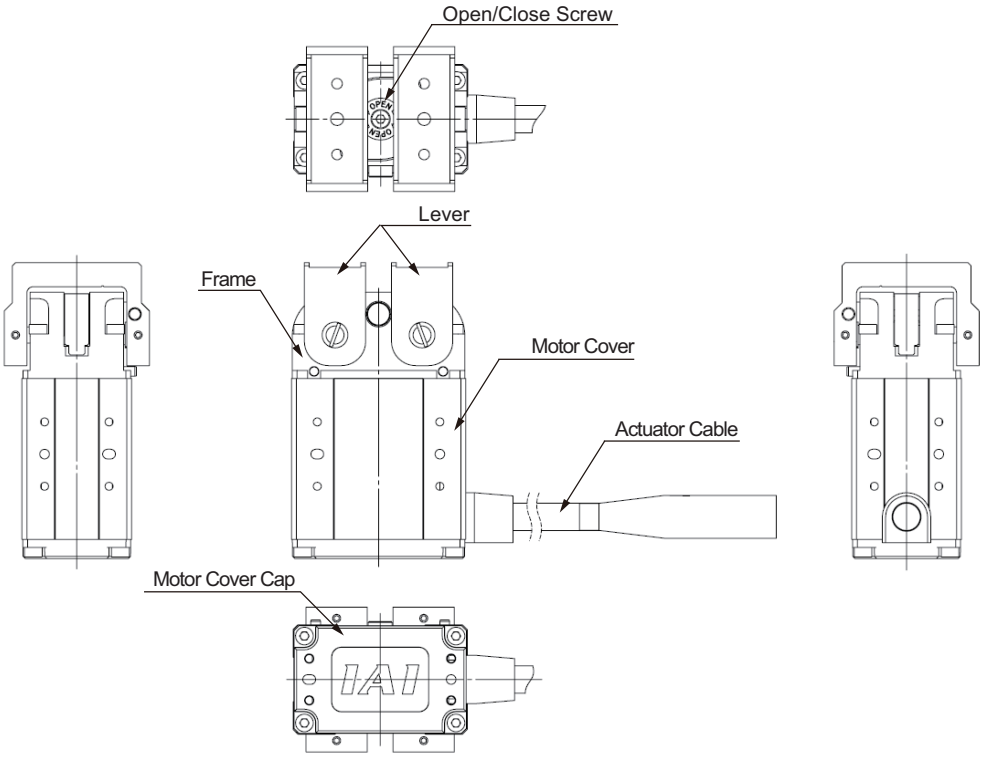

1. Specifications Check

1.1 Checking the Product

The standard configuration of this product is comprised of the following parts.
See the component list for the details of the enclosed components. If you find any fault or missing parts, contact your local IAI distributor.

1.1.1 Parts

No.	Name	Model number	Quantity	Remarks
1	Actuator	Refer to “How to Read the Model Nameplate” and “How to Read the Model Number.”	1	
Accessories				
2	Motor • Encoder Cables (Note1)		1	
3	Safety Guide		1	

Note1 The motor • encoder cables differ between the standard model and robot cable.
[Refer to 1.5, “Motor • Encoder Cables.”]

1.1.2 Instruction Manuals for the Controllers Related to this Product

No.	Name	Control No.
1	Instruction Manual for MSEL-PC/PG	ME0336
2	Instruction Manual for RSEL System	ME0392
3	Instruction Manual for PCON-CA/CFA Controller	ME0289
4	Instruction Manual for PCON-CB/CGB Controller	ME0342
5	Instruction Manual for PCON-CYB/PLB/POB Controller	ME0353
6	Instruction Manual for MSEP Controller	ME0299
7	Instruction Manual for RCON System	ME0384
8	Instruction Manual for PC Software RCM-101-MW/RCM-101-USB	ME0155
9	Instruction Manual for Touch Panel Teaching Pendant CON-PTA/PDA/PGA	ME0295
10	Instruction Manual for Touch Panel Teaching Pendant CON-PT/PD/PG	ME0227
11	Instruction Manual for Teaching Pendant CON-T/TG	ME0178

1.1.3 How to Read the Model Nameplate

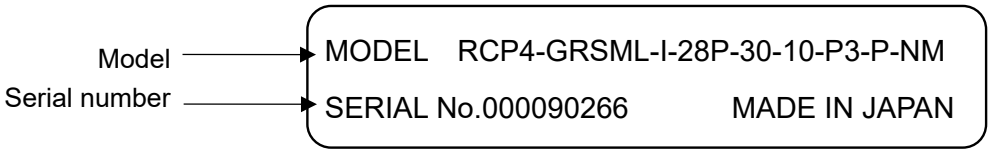

1.1.4 How to Read the Model Number

RCP4 - GRSML - I - 28P - 30 - 10 - P3 - P - NM - **

Series

<Type>
Slide Type
Medium types:
GRSML
Large types:
GRSLL
Extra-large types:
GRSWL
Lever Type
Medium type:
GRLM
Large type:
GRLL
Extra-large type:
GRLW

<Encoder Type>
I : Incremental

<Motor Type>
28P: 28□ size
35P: 35□ size
42P: 42□ size

<Deceleration Ratio>
30: 1/30
28: 1/28

Identification for IAI use only (Note1)

<Options>
NM : Reversed-home specification
ACI : Actuator Cable 1m Specification
AR : Anti-rust black coating (Note 2)

<Cable Length>
N : None
P : 1m
S : 3m
M : 5m
X□□: Length specification
R□□: Robot cable

<Controller>
P3 : PCON
MSEP
MSEL
P5 : RCON
RSEL
RCM-P6PC

<Stroke>
[Refer to 1.2 “Specifications”]

Note 1 Identification for IAI use only : It may be displayed for IAI use. It is not a code to show the model type.
Note 2 It is an option applicable only for RCP4-GRSML, GRSLL and GRSWL.

1.2 Specifications

1.2.1 Common

[1] Slide Type

Model	Medium Type	Large Type	Extra-large types
	GRSML	GRSLL	GRSWL
Motor Type	28P	35P	42P
Open/Close Stroke [mm]	14 (One side 7)	22 (One side 11	30 (One side 15)
Allowable Vertical Load [N]	356	558	651
Max. Open/Close Speed [mm/s] (Note 1)	94	125	157
Maximum Acceleration [G]	0.3	0.3	0.3
Maximum Thrust (finger on one side) [N(kgf)]	124 (12.6)	200 (20.4)	314.2 (32)
Positioning repeatability [mm]	±0.01	±0.01	±0.01
Home-Return Accuracy [mm]	0.3 or less	0.3 or less	0.3 or less
Backlash of Finger on One Side [mm]	0.3 or less	0.4 or less	0.3 or less
Lost Motion [mm]	0.15 or less	0.15 or less	0.15 or less
No. of Encoder Pulses	800	800	800
Finger Driving System	Worm gear + Helical gear + Helical rack gear	Worm gear + Helical gear + Helical rack gear	Worm gear + Helical gear + Helical rack gear
Finger Guiding Structure	Limited guide	Limited guide	Limited guide
Pollution Degree	Class 3	Class 3	Class 3

Note1 The maximum speed may not be reached depending on the operational stroke and the acceleration/deceleration setting.

[2] Lever Type

Model	Medium Type	Large Type	Extra-large types
	GRLM	GRLL	GRWL
Motor Type	28P	35P	42P
Open/Close Stroke [mm]	180 (One side 90)	180 (One side 90)	180 (One side 90)
Allowable Vertical Load [N]	49	73.5	127
Max. Open/Close Speed [mm/s] (Note 1)	600	600	643
Maximum Acceleration [G]	0.3	0.3	0.3
Maximum Thrust (finger on one side) [N(kgf)]	50 (5.1)	85.7 (8.7)	128.5 (13.1)
Positioning repeatability [mm]	±0.05	±0.05	±0.05
Home-Return Accuracy [mm]	1 or less	1 or less	1 or less
Backlash of Finger on One Side [mm]	2.5 or less	2.5 or less	2.5 or less
Lost Motion [mm]	0.3 or less	0.3 or less	0.3 or less
No. of Encoder Pulses	800	800	800
Finger Driving System	Worm gear + Helical gear	Worm gear + Helical gear	Worm gear + Helical gear
Pollution Degree	Class 3	Class 3	Class 3

Note1 The maximum speed may not be reached depending on the operational stroke and the acceleration/deceleration setting.

1.2.2 Relation between the Current Limit Value and the Grip Force

RCP4-GRSML Grip Force (Slide Type)

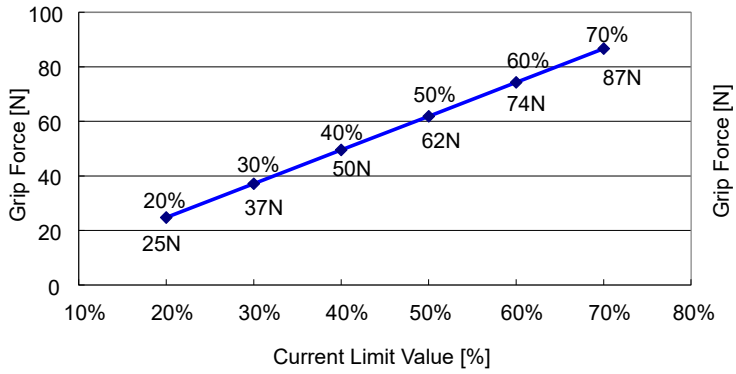

RCP4-GRLM Grip Force (Lever Type)

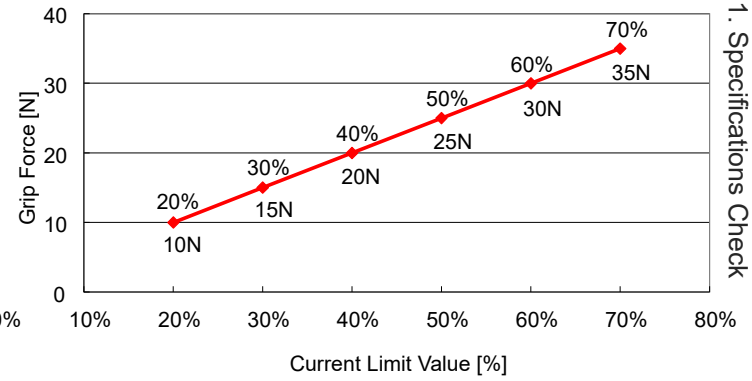

RCP4-GRSLL Grip Force (Slide Type)

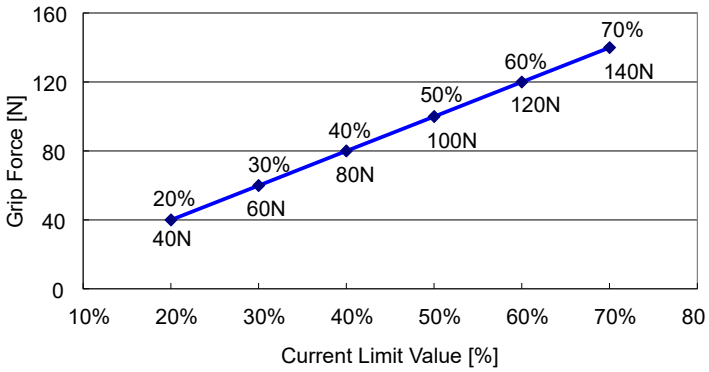

RCP4-GRLL Grip Force (Lever Type)

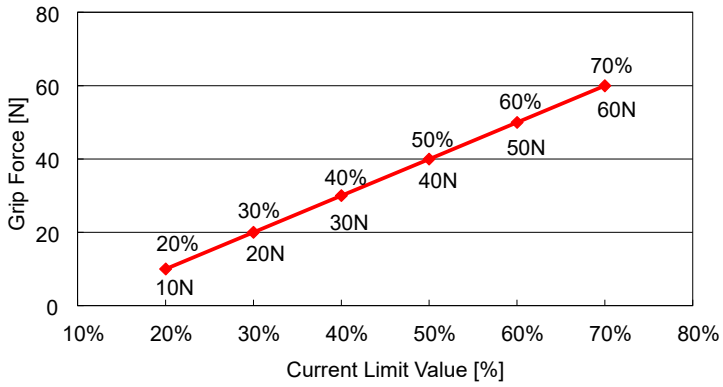

RCP4-GRSWL Grip Force (Slide Type)

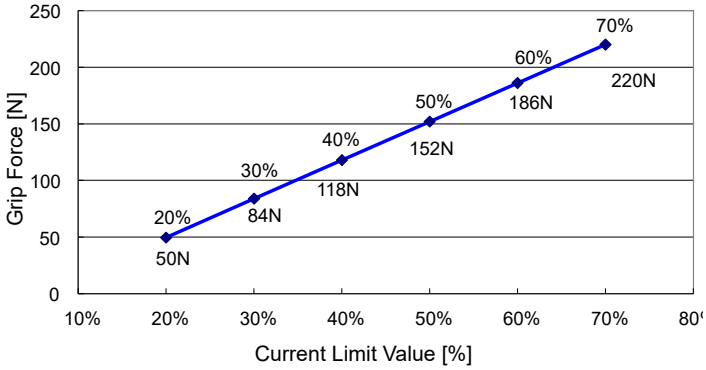

RCP4-GRLW Grip Force (Lever Type)

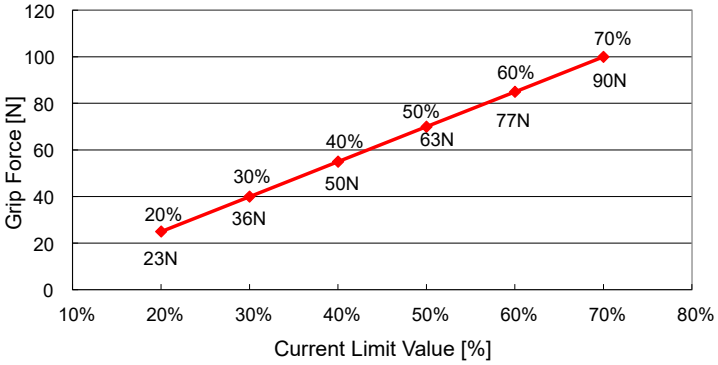

⚠ Caution:

(1) It is a reference for slide type when pressing is performed at 5mm/s of velocity.
It is a reference for lever type when pressing is performed at 20deg/s of velocity.

(2) The grip force is the values under the conditions stated below.
Slide Type: Total value of grip force of both slides at the top surface of the slides (gripping point = 0mm, overhang = 0mm)
Lever Type: Total value of grip force of both slides at the top surface of the Levers (gripping point = 0mm, overhang = 0mm)
The actual grip force drops in inverse proportion to the distance from the fulcrum of open and close. [Refer to the next page for the effective grip force for Lever Type]

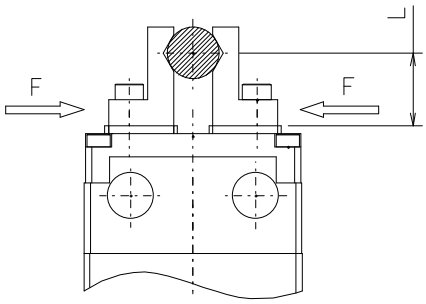

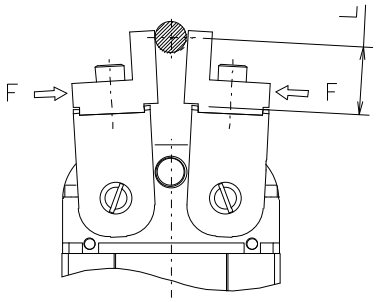

(3) There is a little variance in the actual grip force. The variance of the grip force becomes large when the current limit value is low.

(4) Use the product within the range in the graph for the current limit value. Pressing force will not be stable if used below 20%. There is even a case that it would not operate. The product cannot be used above 70%. Doing so may cause degradation in the motor coil insulation by heat radiation, which results in shortening the product life.

(5) For the CON system controllers such as PCON, when the approach speed (setting in the position table) to the pressing start position is 5mm/s or less, pressing is performed at the approach speed. In such a case also the pressing force will be unstable. In such cases, check in advance that the actuator can be used with no problem before omit using.
For the SEL system controllers such as MSEL, pressing operation is performed at the speed set in PAPR Command regardless of the approach speed to the pressing start position.

◎ Relation between the Gripping Point and the Grip Force for the Lever Type (Reference)

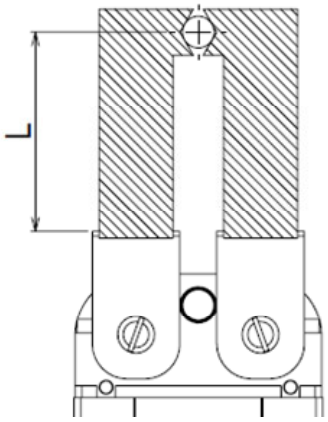

Type	Max. Gripping Point (L) [mm]
GRLM	100
GRLL	100
GRLW	100

RCP4-GRLM

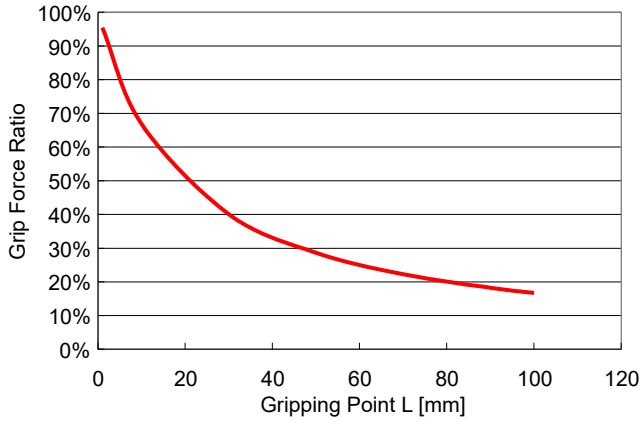

RCP4-GRLL

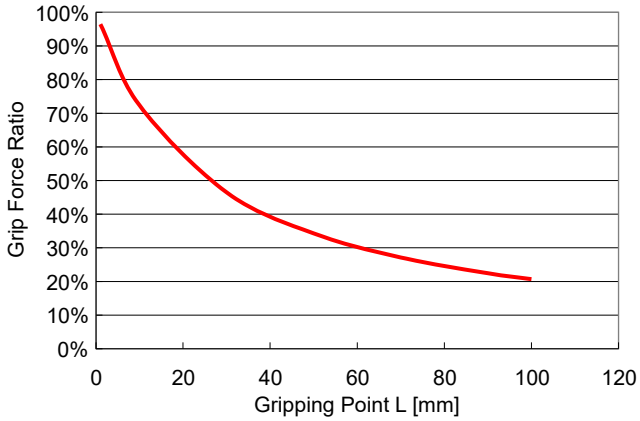

RCP4-GRLW

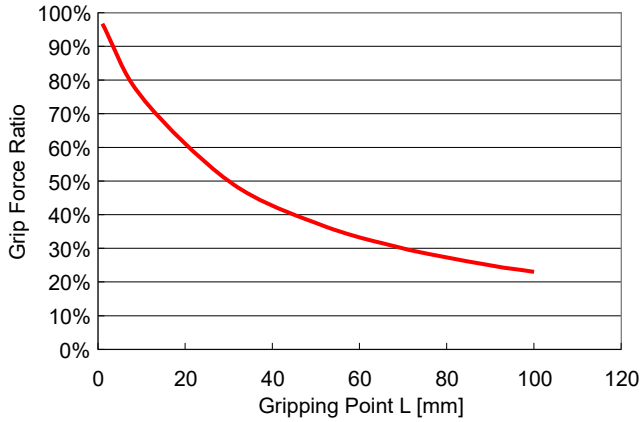

1.2.3 Allowable Static Moments of the Slide Type

Type	Allowable Static Moment [N•m]			Max. Gripping Point (L) [mm]	Max. Overhang (H) [mm]
	Ma	Mb	Mc		
GRSML	1.9	2.7	4.6	80	80
GRSLL	3.8	5.5	9.5	100	100
GRSWL	5.1	7.2	12.4	100	100

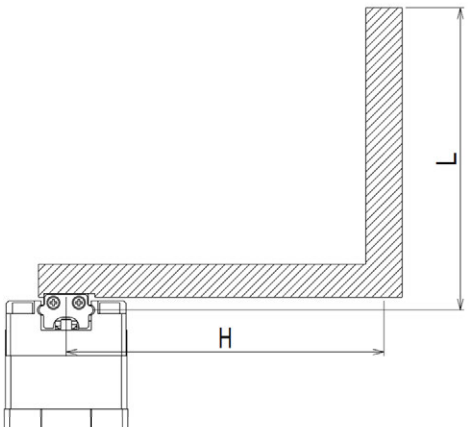

• Top Surface of the Slides
– Distance of the Guide Operating Point

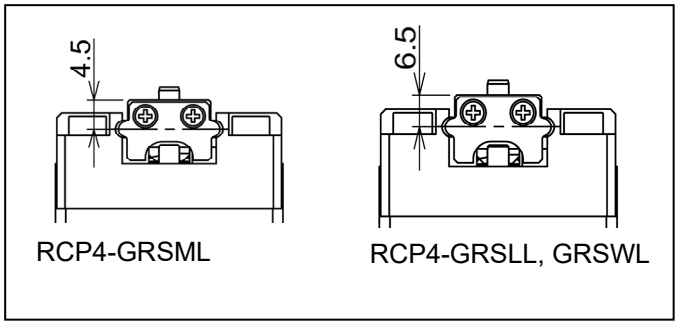

RCP4-GRSML

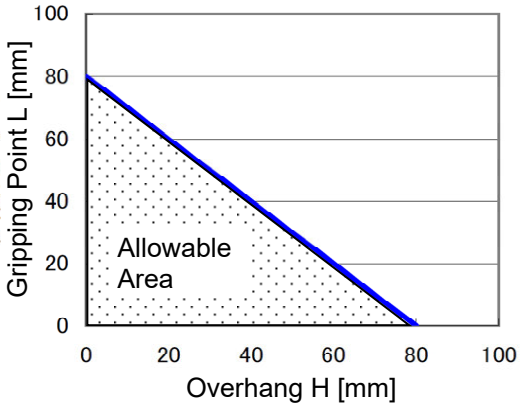

RCP4-GRSLL, GRSWL

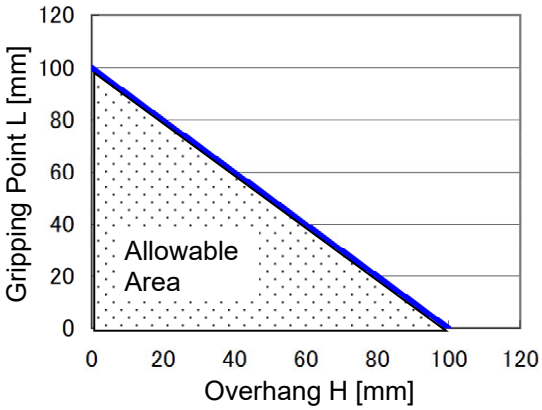

⚠ Caution: Use the product within the allowable area shown in the graphs above for the maximum gripping point (L) and maximum overhang amount. Use of the product outside the range may drop the life of the guide drastically.

1.2.4 Duty in Continuous Operation

Continuous operation is available with the duty 100%.
Duty is the rate of operation expressed in % that represents the time of the actuator being operated in 1 cycle of operation.

1.3 Operating Conditions

1.3.1 Grip Force

It is necessary to satisfy the conditions stated below to use the product. Conduct the following calculation to make sure it is satisfied.

[1] Slide types

Procedure 1 : Check for the necessary grip force and transportable work piece mass

↓

Procedure 2 : Check for the vertical allowable load of the fingers and allowable moment

Procedure 1 : Check for the necessary grip force and transportable work piece mass

If a work piece is to be gripped on the fingers with the friction force created by the grip force, the formula to calculate the necessary grip force is as follows;

(1) In case of ordinary transportation

F : Grip Force [N]……Sum of pressing force on each finger

μ : Coefficient of static friction between finger attachment and work piece

m : Mass of work piece [kg]

g : Gravitational acceleration [= 9.8m/s^2]

The condition to grip the work piece statically and that the work piece would not drop is;

$$F\mu > W$$

$$F > \frac{mg}{\mu}$$

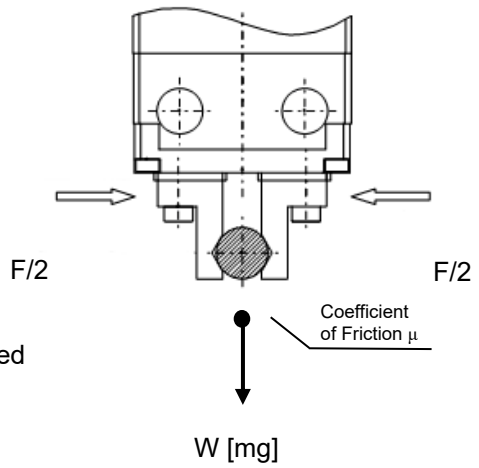

The necessary grip force assuming the safety factor recommended for ordinary transportation is 2 should be;

$$F > \frac{mg}{\mu} \times 2 \text{ (safety factor)}$$

When coefficient of friction is μ0.1 to 0.2;

$$F > \frac{mg}{0.1 \text{ to } 0.2} \times 2 = (10 \text{ to } 20) \times mg$$

<u>* The mass of a transportable work piece will get higher as the coefficient of static friction is higher. However it is necessary to that enables it to obtain a grip force of 10 to 20 times or more to ensure the safety.</u>

> For ordinary work piece transportation;
> Necessary grip force ⇒ 10 to 20 times or more of work piece mass
> Transportable work piece mass ⇒ 1/10 to 1/20 or less of grip force

(2) In case of high acceleration/deceleration speed or a big impact is applied to the work piece during transportation

High inertial force, in addition to the gravity, will be applied to the work piece. In such cases, consider an even higher safety factor if it is necessary.

> When high acceleration/deceleration speed or a big impact is applied;
> Necessary grip force ⇒ 30 to 50 times or more of the work piece mass
> Transportable work piece mass ⇒ 1/30 to 1/50 or less of the grip force

Procedure 2 : Check for the vertical allowable load of the fingers and allowable moment
Check the vertical load and the moment applicable to the finger. Figure out Fz, Ma, Mb and Mc by referring to (1) to (3) described below, and it is necessary to select a suitable model considering not to exceed the allowable values.

Load and the moment applicable to the finger

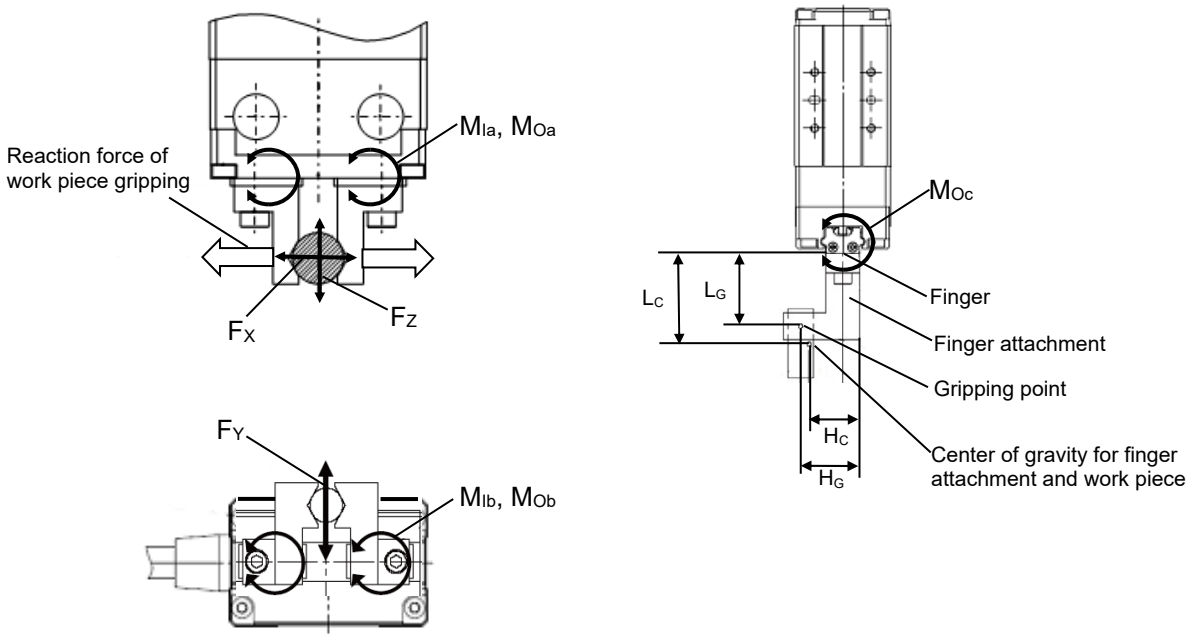

F_X: External force in X direction applied to work piece and finger [N]
F_Y: External force in Y direction applied to work piece and finger [N]
F_Z: External force in Z direction applied to work piece and finger [N]
L_G: Distance from finger attachment surface to gripping point [mm] (Note 1)
H_G: Distance from center of fingers to gripping point (Overhang) [mm] (Note 1)
L_C: Distance from finger attachment surface to center of gravity for work piece and finger attachment [mm]
H_C: Distance from center of fingers to center of gravity for work piece and finger attachment [mm]

M_{Ia}: Moment in Ma direction generated on fingers due to grip force [N•m]
M_{Ib}: Moment in Mb direction generated on fingers due to grip force [N•m]
M_{Oa}: Moment in Ma direction generated on fingers due to external force [N•m]
M_{Ob}: Moment in Mb direction generated on fingers due to external force [N•m]
M_{Oc}: Moment in Mc direction generated on fingers due to external force [N•m]
Ma: All moments in Ma direction generated on fingers [N•m]
Mb: All moments in Mb direction generated on fingers [N•m]
Mc: All moments in Mc direction generated on fingers [N•m]

Note1 For L_G and H_G, have the values below as the upper limit. Exceeding the allowable range may generate an excessive moment on the finger sliding mechanism, which may be a cause of a bad impact to the product life.

Upper Limit for Gripping Point L_G and Overhang H_G

GRSML

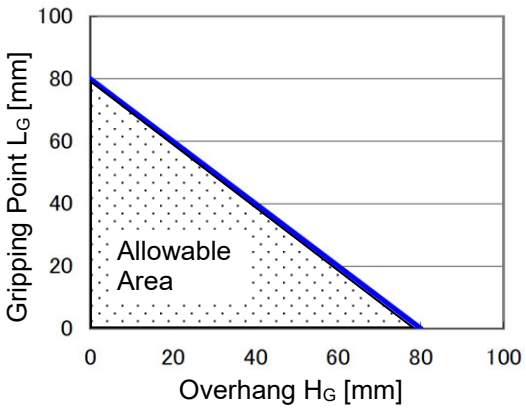

GRSLL, GRSWL

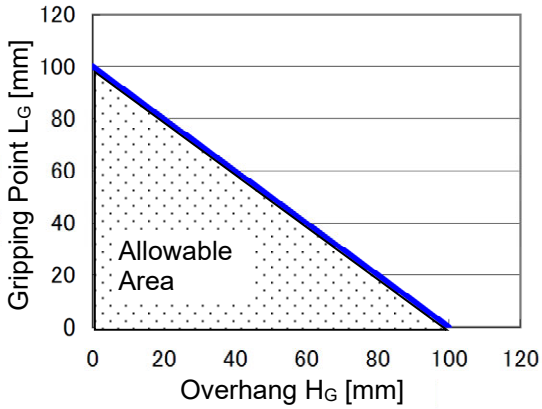

Table 1: Allowable Load and Allowable Moment on the Fingers (Note 1)

Model	Allowable Load in Vertical [N] F_{Zmax}	Max. Allowable moment [N•m] (Note 2)		
		M_{amax}	M_{bmax}	M_{cmax}
GRSML	356	1.9	2.7	4.6
GRSLL	558	3.8	5.5	9.5
GRSWL	651	5.1	7.2	12.4

Note 1 The graphs show the values for allowable load and allowable moment in static on one finger.
Note 2 The values for the allowable moment are those when the load is applied in one direction only.
The values become one half when the load is applied from in two directions.

(1) Moment generated on fingers due to grip force

1) Moment in Ma direction [M_{la}]

$$M_{la} = L_G \frac{1.5F_G}{2} \times 10^{-3}$$

F_G: Grip force of gripper [N]

2) Moment in Mb direction [M_{lb}]

$$M_{lb} = H_G \frac{1.5F_G}{2} \times 10^{-3}$$

F_G: Grip force of gripper [N]

Refer to "1.2.2 Relation between Current Limit Value and Grip Force" for grip force F_G.
As the grip force is a reference value, it is multiplied by 1.5 for the safety margin in the moment calculation.

(2) Moment generated on the fingers due to an external force

External force as well as grip force will be applied to the work piece and the finger attachment in the movements such as moving straight or turning in the condition of the gripper being attached on a Cartesian Robot, Articulated Robot or other actuators.
Have the following calculation.

♦ External force applied on the work piece and finger attachment [F_X, F_Y, F_Z]
Figure out the following types of external forces in three directions, X, Y and Z, applied on the work piece and finger attachment considering the condition of the gripper use, and sum up all the values to determine F_X, F_Y and F_Z.

a) Weight of the work piece and finger attachment
$F = mg$ m : mass of the work piece and finger attachment [kg],
g : gravitational acceleration [=9.8m/s^2]

b) Inertial force in the gripper moving straight
$F = ma$ a : Acceleration/deceleration during transportation [m/s^2]

c) Centrifugal force in gripper turning
$F = mr\omega^2$ r : Radius of turning [m], ω : Angular velocity [deg/s]

<u>Confirm that F_z is below the allowable load vertical direction, F_{zmax} in Table 1.</u>

♦ Moment generated on the fingers due to an external force
Figure out the moment in each direction due to external forces F_X, F_Y and F_Z calculated above.

1) Moment in Ma direction [M_{oa}]
$M_{oa} = L_c F_X \times 10^{-3}$

2) Moment in Mb direction [M_{ob}]
$M_{ob} = H_c F_X \times 10^{-3}$

3) Moment in Mc direction [M_{oc}]
$M_{oc} = L_c F_Y \times 10^{-3} + H_c F_Z \times 10^{-3}$

(3) All moments in each direction generated to the fingers

$Ma = M_{la} + M_{oa}$, $Mb = M_{lb} + M_{ob}$, $Mc = M_{oc}$

<u>Confirm that the value figured out in the calculation above is below the allowable moment stated in Table 1.</u>

(Note) Attempt to have the finger attachment <u>minimized in size and weight</u> even if it is in the allowable range. If the fingers are long and big in size and heavy in mass, the moment caused by an impact at gripping may cause a performance drop or give a bad impact to the guide area.

[2] Lever types

Procedure 1 : Check for the necessary grip force and transportable work piece mass

↓

Procedure 2 : Check for the moment of inertia on the finger attachment

↓

Procedure 3 : Check for the external force applied on finger

Procedure 1 : Check for the necessary grip force and the transportable work piece mass

In the same manner as Procedure 1 for Slide types, figure out the necessary grip force and confirm that the requirement is satisfied.

Figure out the effective grip force on the gripping point by referring to “1.2.2 Relation between the Current Limit Value and the Grip Force”.

For ordinary work piece transportation;
Necessary grip force ⇒ 10 to 20 times or more of the work piece mass
Transportable work piece mass ⇒ 1/10 to 1/20 or less of the grip force

When high acceleration/deceleration speed or a big impact is applied;
Necessary grip force ⇒ 30 to 50 times or more of the work piece mass
Transportable work piece mass ⇒ 1/30 to 1/50 or less of the grip force

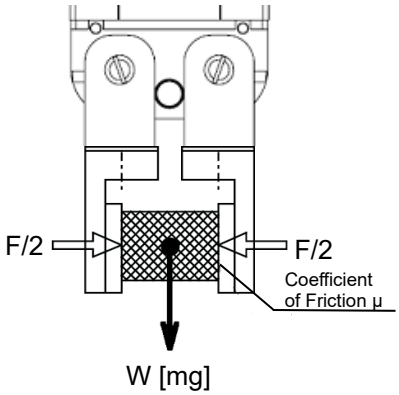

Procedure 2 : Check for the moment of inertia on the finger attachment

Make sure all the moments of inertia for the Z-axis (fulcrum) turning on the finger attachment are within the allowable range. Figure out by dividing to several equations considering the structure and profile of the fingers. For reference, shown below is an example how to figure out by dividing to two equations.

(1) Moment of inertia for Z1-axis (center of gravity in A) turning (Part A)

m_1 : Mass of A [kg]

a, b, c : Dimensions of A [mm]

m_1 [kg] = $a_1 \times b_1 \times c_1 \times$ Specific gravity $\times 10^{-6}$

$$I_{Z1}\,[\mathrm{kg \cdot m^2}] = \frac{m_1 (a_1^2 + b_1^2)}{12} \times 10^{-6}$$

(2) Moment of inertia for Z2-axis (center of gravity in B) turning (Part B)

$$I_{Z2}\,[\mathrm{kg \cdot m^2}] = \frac{m_2 (a_2^2 + b_2^2)}{12} \times 10^{-6}$$

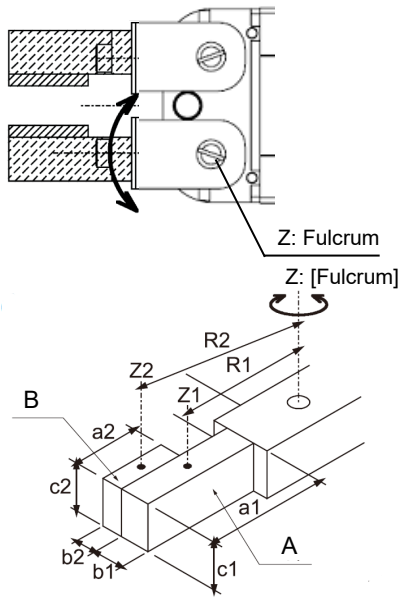

(3) All Moments of inertia for Z-axis (fulcrum) Turning
R1: Distance from center of gravity of A to the finger open/close fulcrum [mm]
R2: Distance from center of gravity of B to the finger open/close fulcrum [mm]

$$I\,[kg \cdot m^2] = (I_{Z1} + m_1 R_1^2 \times 10^{-6}) + (I_{Z2} + m_2 R_2^2 \times 10^{-6})$$

Table 2: Allowable Moment of Inertia on the Finger (Note 1)

Model	Allowable Moment of Inertia I_{max} [kg•m²]	Mass (Reference) Max [kg]
GRLM	6.0×10^{-4}	0.15
GRLL	1.3×10^{-3}	0.25
GRLW	3.0×10^{-3}	0.4

Confirm that the value figured out in the calculation above is below the allowable moment of inertia stated in Table 2.

Note 1 The table shows the values for allowable moment of inertia, allowable load torque and allowable thrust load for the static condition on one finger.

Procedure 3 : Check for the external force applied on the finger
External force as well as grip force will be applied to the work piece and the finger attachment in the movements such as moving straight or turning in the condition of the gripper being attached on a Cartesian Robot, Articulated Robot or other actuators.

(1) Allowable Load Torque
Use the product in a condition that the load torque applied to the fingers is below the maximum allowable load torque.

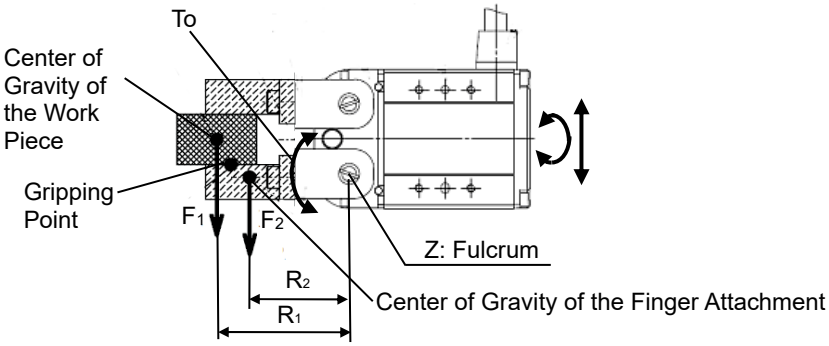

m_1 : Mass of the work piece [kg]
m_2 : Mass of the finger attachment [kg]
R_1 : Distance from the center of gravity for the work piece to the finger open/close fulcrum [mm]
R_2 : Distance from the center of gravity for the finger attachment to the finger open/close fulcrum [mm]
F_1 : External force applied on the work piece [N]
F_2 : External force applied on the finger attachment [N]
T_0 : Torque generated on the fingers due to an external force [N•m]

♦ External force applied on the work piece and the finger attachment
Figure out the following types of external forces applied on the work piece and finger attachment considering the condition of the gripper use, and sum up all the values.

a) Weight of the work piece and finger attachment
$F = mg$ m : mass of the work piece and finger attachment [kg],
g : gravitational acceleration [=9.8m/s²]

b) Inertial force in gripper moving straight
$F = ma$ a : Acceleration/deceleration during transportation [m/s²]

c) Centrifugal force in gripper turning
$F = mr\omega^2$ r : Radius of turning [m], ω : Angular velocity [deg/s]

Total External Force
$F1 = m_1 g + m_1 a + m_1 r\omega^2$ • • • External force applied on the work piece
$F2 = m_2 g + m_2 a + m_2 r\omega^2$ • • • External force applied on the finger attachment

♦ Torque generated on the fingers due to an external force

$T_0 = F_1R_1 \times 10^{-3} + F_2R_2 \times 10^{-3}$

Confirm that the value figured out with the formula above is below the maximum allowable load torque stated in Table 3.

Table 3: Allowable Load Torque on the Finger (Note 1)

Model	Max. Allowable Load Torque Tmax [N•m]
GRLM	0.35
GRLL	0.7
GRLW	1.5

(2) Allowable Thrust Load

Use the product in a condition that the load torque applied to the fingers is below the maximum allowable load torque.

Note 1 The table shows the values for allowable moment of inertia, allowable load torque and allowable thrust load for the static condition on one finger.

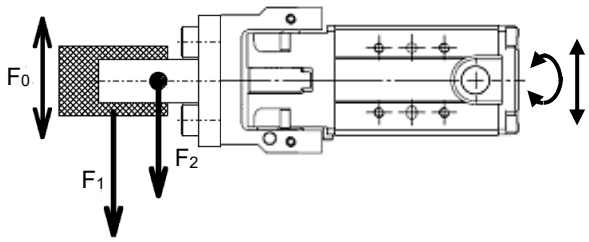

m_1 : Mass of the work piece [kg]
m_2 : Mass of the finger attachment [kg]
F_1 : External force applied on the work piece [N]
F_2 : External force applied on the finger attachment [N]
F_0 : Load generated on the finger attachment [N]

Table 4: Allowable Thrust Load on Finger (Note 1)

Model	Allowable Thrust Load Fmax [N]
GRLM	20
GRLL	25
GRLW	30

Note 1 The table shows the values for allowable moment of inertia, allowable load torque and allowable thrust load in static on one finger.

♦ External force applied on the work piece and the finger attachment

Figure out the following types of external forces applied on the work piece and the finger attachment considering the condition of the gripper use, and sum up all the values.

a) Weight of the work piece and the finger attachment

$F = mg$ m : mass of the work piece and the finger attachment [kg],
g : gravitational acceleration [=9.8m/s^2]

b) Inertial force in the gripper moving straight

$F = ma$ a : Acceleration/deceleration during transportation [m/s^2]

c) Centrifugal force in the gripper turning

$F = mr\omega^2$ r : Radius of turning [m], ω : Angular velocity [deg/s]

Total External Force

$F1 = m_1g + m_1a + m_1r\omega^2$ • • • External force applied on the work piece
$F2 = m_2g + m_2a + m_2r\omega^2$ • • • External force applied on the finger attachment

♦ Load generated on the Finger due to an External Force

$F_0 = F_1 + F_2$

Confirm that the value figured out with the formula above is below the allowable thrust load stated in Table 4.

(Note) Attempt to have the finger attachment minimized in size and weight even if it is in the allowable range. If the fingers are long and big in size and heavy in mass, the moment caused by an impact at gripping may cause a performance drop or give a bad impact to the structural area.

1.4 Option

1.4.1 Reversed-home Specification (Model: NM)

The standard home position is on the open side. It is on the closed side if the home direction is set the opposite.

(Note) The home position is adjusted at the factory before shipment. If you wish to change the home after the delivery of your actuator, you must return the actuator to IAI for adjustment.

1.4.2 Actuator Cable 1m Specification (Model: ACI)

It is 200mm in standard. When a longer actuator cable is desired, 1m can be prepared if indicated.

1.4.3 Anti-Rust Black Coating (Model: AR)

Applicable Models: GRSML, GRSLL, GRSWL

Anti-rust black coating is applied on the finger guides and fingers.
It is to be used in an environment that is easy to rust.

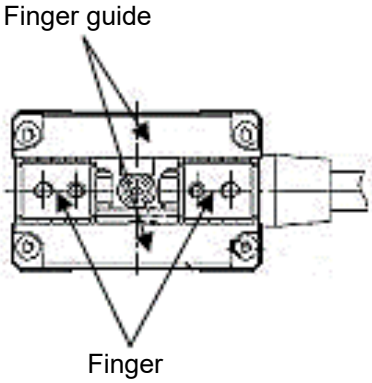

1.5 Motor • Encoder Cables

1.5.1 Motor • Encoder Integrated Cables

CB-CAN-MPA□□□ (□□□ indicates the cable length L Example: 020 = 2m), up to 20m

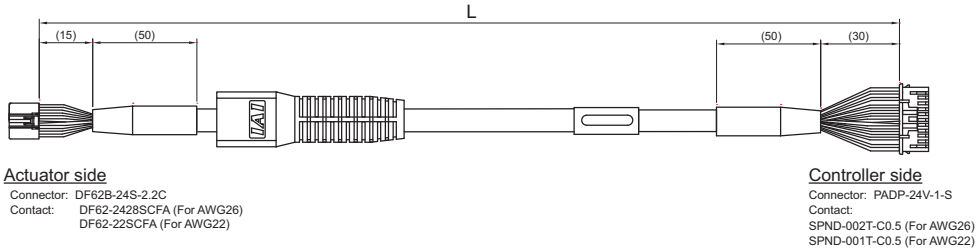

Connection diagram

Actuator side

Thickness	Electric Wire Color	Symbol	Pin No.
AWG22/19	Blue	ϕA	3
AWG22/19	Orange	VMM	5
AWG22/19	Brown	ϕB	10
AWG22/19	Gray	VMM	9
AWG22/19	Green	ϕ_A	4
AWG22/19	Red	ϕ_B	15
AWG26	Black	LS+	8
AWG26	Yellow	LS-	14
AWG26	Blue	SA	12
AWG26	Orange	SB	17
AWG26	Green	A+	1
AWG26	Brown	A-	6
AWG26	Gray	B+	11
AWG26	Red	B-	16
AWG26	Blue	BK+	20
AWG26	Orange	BK-	2
AWG26	Gray	VCC	21
AWG26	Red	GND	7
AWG26	Brown	VPS	18
AWG26	Green	LS_GND	13
-	-	-	19
AWG26	Pink	-	22
-	-	-	23
AWG26	Black	FG	24

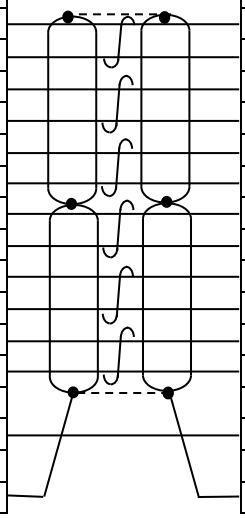

Controller side

Pin No.	Symbol	Electric Wire Color	Thickness
1	ϕA	Blue	AWG22/19
2	VMM	Orange	AWG22/19
3	ϕB	Brown	AWG22/19
4	VMM	Gray	AWG22/19
5	ϕ_A	Green	AWG22/19
6	ϕ_B	Red	AWG22/19
7	LS+	Black	AWG26
8	LS-	Yellow	AWG26
11	SA	Blue	AWG26
12	SB	Orange	AWG26
13	A+	Green	AWG26
14	A-	Brown	AWG26
15	B+	Gray	AWG26
16	B-	Red	AWG26
9	BK+	Blue	AWG26
10	BK-	Orange	AWG26
17	VCC	Gray	AWG26
19	GND	Red	AWG26
18	VPS	Brown	AWG26
20	LS_GND	Green	AWG26
22	-		-
21	-	Pink	AWG26
23	-		-
24	FG	Black	AWG26

(Note) About thickness AWG22/19
The thickness is AWG22 when the cable length is 5m or less, and AWG19 when longer than 5m.

1.5.2 Motor • Encoder Integrated Cables Robot Type

CB-CAN-MPA□□□-RB (□□□ indicates the cable length L Example: 020 = 2m), up to 20m

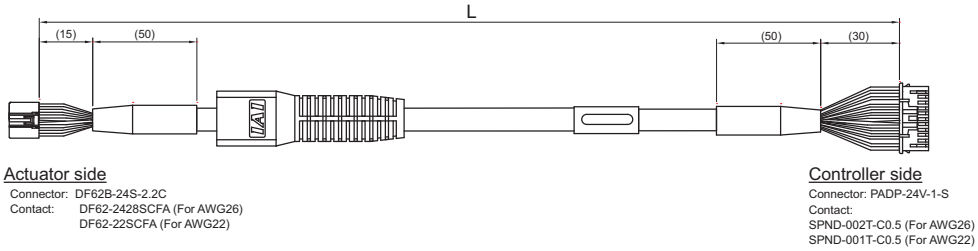

Connection diagram

Actuator side

Thickness	Electric Wire Color	Symbol	Pin No.
AWG22/19	Blue	ϕA	3
AWG22/19	Orange	VMM	5
AWG22/19	Brown	ϕB	10
AWG22/19	Gray	VMM	9
AWG22/19	Green	ϕ_A	4
AWG22/19	Red	ϕ_B	15
AWG26	Black	LS+	8
AWG26	Yellow	LS-	14
AWG26	Blue	SA	12
AWG26	Orange	SB	17
AWG26	Green	A+	1
AWG26	Brown	A-	6
AWG26	Gray	B+	11
AWG26	Red	B-	16
AWG26	Blue	BK+	20
AWG26	Orange	BK-	2
AWG26	Gray	VCC	21
AWG26	Red	GND	7
AWG26	Brown	VPS	18
AWG26	Green	LS_GND	13
-	-	-	19
AWG26	Pink	-	22
-	-	-	23
AWG26	Black	FG	24

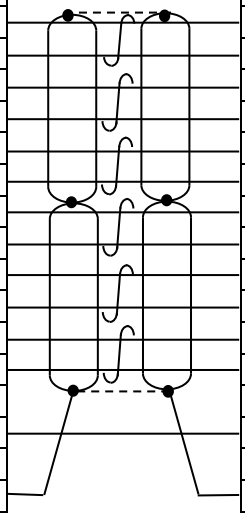

Controller side

Pin No.	Symbol	Electric Wire Color	Thickness
1	ϕA	Blue	AWG22/19
2	VMM	Orange	AWG22/19
3	ϕB	Brown	AWG22/19
4	VMM	Gray	AWG22/19
5	ϕ_A	Green	AWG22/19
6	ϕ_B	Red	AWG22/19
7	LS+	Black	AWG26
8	LS-	Yellow	AWG26
11	SA	Blue	AWG26
12	SB	Orange	AWG26
13	A+	Green	AWG26
14	A-	Brown	AWG26
15	B+	Gray	AWG26
16	B-	Red	AWG26
9	BK+	Blue	AWG26
10	BK-	Orange	AWG26
17	VCC	Gray	AWG26
19	GND	Red	AWG26
18	VPS	Brown	AWG26
20	LS_GND	Green	AWG26
22	-		-
21	-	Pink	AWG26
23	-		-
24	FG	Black	AWG26

(Note) About thickness AWG22/19
The thickness is AWG22 when the cable length is 5m or less, and AWG19 when longer than 5m.

2. Installation

2.1 Transportation

[1] Handling of the Actuator

Unless otherwise specified, the actuator is shipped with each axis unit packaged separately.

(1) Handling the Packed Unit

- Do not damage or drop. The package is not applied with any special treatment that enables it to resist an impact caused by a drop or crash.
- Transport a heavy package with at least more than two operators. Consider an appropriate method for transportation.
- Keep the unit in a horizontal orientation when placing it on the ground or transporting. Follow the instruction if there is any for the packaging condition.
- Do not step or sit on the package.
- Do not put any load that may cause a deformation or breakage of the package.

(2) Handling the Actuator After Unpacking

- Do not carry the actuator by its motor unit or its cable or attempt to move it by pulling the cable.
- Hold the frame or motor cover section of the body when transporting the actuator main body.
- Do not hit or drop the actuator during transportation.
- Do not attempt to force any part of the actuator. Do not apply excess force especially on the fingers, finger guide and levers.

[2] Handling in the Assembled Condition

This is the case when the product is delivered from our factory under a condition that it is assembled with other actuators. The combined axes are delivered in a package that the frame is nailed on the lumber base.

(1) How to Handle the Package

- Do not hit or drop the package. No special treatment is conducted on this package to endure a drop or impact on it.
- Do not attempt to carry a heavy package with only one worker. Also, have an appropriate method for transportation.
- When hanging up with ropes, support on the reinforcement frame on the bottom of the lumber base. When bringing up the package with a forklift, also support on the bottom of the lumber base.
- Handle with care when putting the package down to avoid impact or bounce.
- Do not step on the package.
- Do not put anything on the package that could deform or damage it.

(2) How to Handle after Unpackaged

- Fix the finger so they would not accidently move during transportation.
- If the tip of an actuator is overhanging, have an appropriate way to fix it to avoid shake due to the external vibration. In the transportation without the tip being fixed, do not apply any impact with 0.3G or more.
- When hanging up with ropes, have appropriate cushioning to avoid any deformation of the actuator body. Also keep it in stable horizontal orientation. Make a fixture utilizing the attachment holes and the tapped holes on the actuator body if necessary.
- Do not attempt to apply load on the actuators or the connector box. Also pay attention not to pinch cables and bend or deform them forcefully.

[3] Handling in Condition of being assembled in Machinery Equipment (System)

These are some caution notes for when transporting the actuator being assembled in the machinery equipment (system):

- Fix the actuator so it would not move during transportation.
- If the tip of an actuator is overhanging, have an appropriate way to fix it to avoid shake due to the external vibration. In the transportation without the tip being fixed, do not apply any impact with 0.3G or more.
- When hanging up the machinery equipment (system) with ropes, do not attempt to apply load on the actuators or the connector box. Also pay attention not to pinch cables and bend or deform them forcefully.

2.2 Installation and Storage • Preservation Environment

[1] Installation Environment

The actuator should be installed in a location other than those specified below.
Also provide sufficient work space required for maintenance inspection.

- Where the actuator receives radiant heat from strong heat sources such as heat treatment furnaces
- Where the ambient temperature exceeds the range of 0 to 40°C
- Where the temperature changes rapidly and condensation occurs
- Where relative humidity smaller than 20% or larger than 85%RH
- Where the actuator receives direct sunlight
- Where the actuator is exposed to corrosive or combustible gases
- Where the ambient air contains a large amount of powder dust, salt or iron (at level exceeding what is normally expected in an assembly plant)
- Where the actuator is subject to splashed water, oil (including oil mist or cutting fluid) or chemical solutions
- Where the actuator receives impact or vibration
- Place with an altitude of 2,000m or more

When using the product in any of the locations specified below, provide a sufficient shield.

- Where noise generates due to static electricity, etc.
- Where the actuator is subject to a strong electric or magnetic field
- Where the actuator is subject to ultraviolet ray or radiation

[2] Storage • Preservation Environment

- The storage and preservation environment should comply with the same standards as those for the installation environment. In particular, when the machine is to be stored for a long time, pay close attention to environmental conditions so that no dew condensation forms.
- Unless specially specified, moisture absorbency protection is not included in the package when the machine is delivered. In the case that the machine is to be stored and preserved in an environment where dew condensation is anticipated, take the condensation preventive measures from outside of the entire package, or directly after opening the package.
- For storage and preservation temperature, the machine withstands temperatures up to 60°C for a short time, but in the case of the storage and preservation period of 1 month or more, control the temperature to 50°C or less.
- Storage and preservation should be performed in the horizontal condition. In the case it is stored in the packaged condition, follow the posture instruction if any displayed on the package.

2.3 How to Install

This chapter explains how to install the actuator on your mechanical system.

2.3.1 Installation

○ : Possible ×: Not possible

Horizontal installation	Vertical installation	Sideways installation	Ceiling Mount installation
○	○	○	○

Installation Orientation

Horizontal	Vertical	Sideways	Ceiling Mount
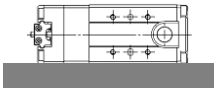	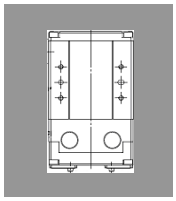	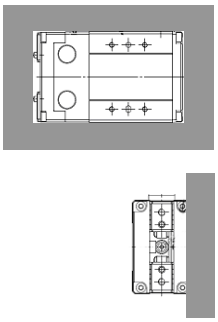	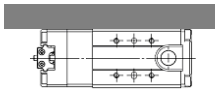

2.3.2 Installation of the Main Unit

Make sure that the surface to install the product is a well-finished machined surface or one that possesses an accuracy equivalent to it.

The body possesses a that enables to affix the body on five faces (four faces on the motor cover and one face on motor cover cap).

- Make sure to use all the tapped holes (4 places) on the attachment surface for fixing.
  (Be aware that the tapping size is different for each model. Refer to the figure below, figures in the next page and after and 6. “External Dimensions”.)
  Screws or tapped holes may get damaged depending on the load applied to the body if not all the holes are used.
- There are a rounded hole and a slotted hole for positioning equipped on each attachment surface. Utilize these holes if necessary.

[1] GRSML

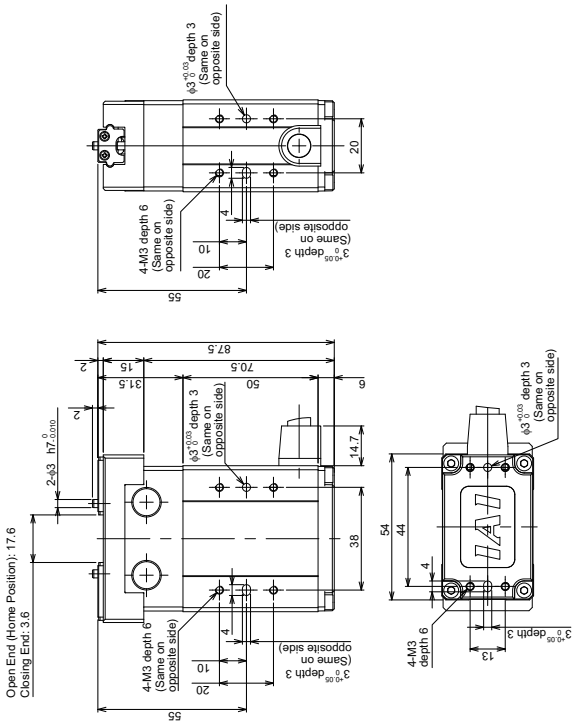

Nominal thread size	Tightening Torque	
	In the case that steel is used for the screw seating surface [N·m (kgf·m)]	In the case that aluminum is used for the screw seating surface [N·m (kgf·m)]
M3	1.54 (0.16)	0.83 (0.09)

About Tightening Screws

- Use a hex socket head cap screw for the attachment to the base.
- It is recommended to use high-tensile screws with ISO-10.9 or more.
- Make sure to have the effective length of screw engagement described below or more for the tightening of a screw and a female screw.
  When female screw is on steel → Thread length same as nominal diameter
  When female screw is on aluminum → Thread length 1.8 times longer them nominal diameter

⚠ Caution: Pay special attention when selecting the screw length. In case that an inappropriate length of a screw is applied, it may cause damage on the tapped holes or insufficiency in attachment strength, which may result in a drop in the operation accuracy or an unexpected accident.

[2] GRSLL

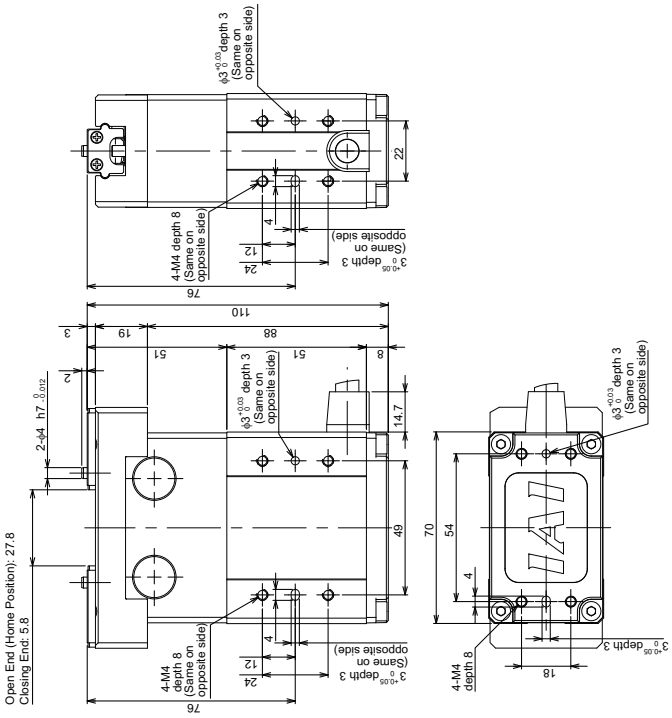

Nominal thread size	Tightening Torque	
	In the case that steel is used for the screw seating surface [N·m (kgf·m)]	In the case that aluminum is used for the screw seating surface [N·m (kgf·m)]
M4	3.59 (0.37)	1.76 (0.18)

About Tightening Screws
- Use a hex socket head cap screw for the attachment to the base.
- It is recommended to use high-tensile screws with ISO-10.9 or more.
- Make sure to have the effective length of screw engagement described below or more for the tightening of a screw and a female screw.
  When female screw is on steel → Thread length same as nominal diameter
  When female screw is on aluminum → Thread length 1.8 times longer them nominal diameter

⚠ Caution: Pay special attention when selecting the screw length. In case that an inappropriate length of a screw is applied, it may cause damage on the tapped holes or insufficiency in attachment strength, which may result in a drop in the operation accuracy or an unexpected accident.

[3] GRSWL

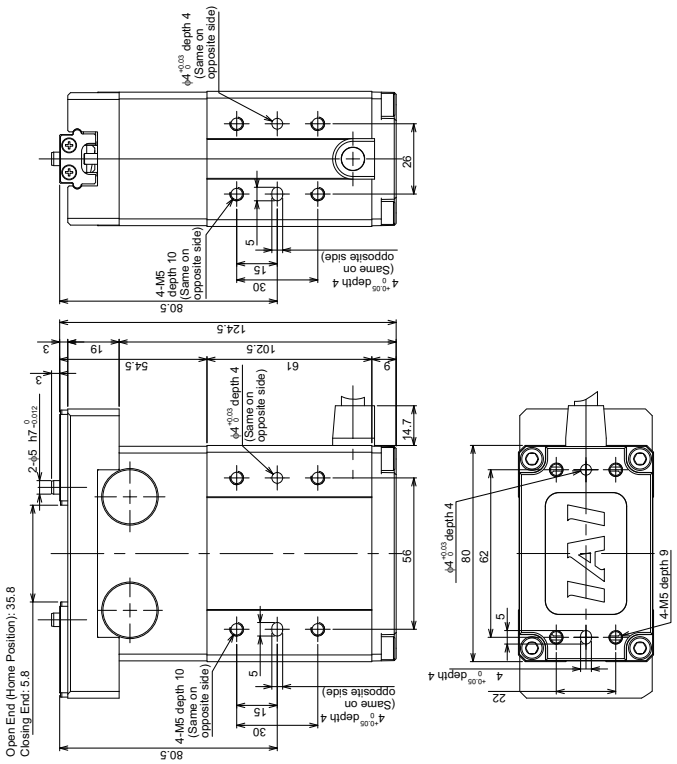

Nominal thread size	Tightening Torque	
	In the case that steel is used for the screw seating surface [N·m (kgf·m)]	In the case that aluminum is used for the screw seating surface [N·m (kgf·m)]
M5	7.27 (0.74)	3.42 (0.35)

About Tightening Screws
- Use a hex socket head cap screw for the attachment to the base.
- It is recommended to use high-tensile screws with ISO-10.9 or more.
- Make sure to have the effective length of screw engagement described below or more for the tightening of a screw and a female screw.
  When female screw is on steel → Thread length same as nominal diameter
  When female screw is on aluminum → Thread length 1.8 times longer them nominal diameter

⚠ Caution: Pay special attention when selecting the screw length. In case that an inappropriate length of a screw is applied, it may cause damage on the tapped holes or insufficiency in attachment strength, which may result in a drop in the operation accuracy or an unexpected accident.

[4] GRLM

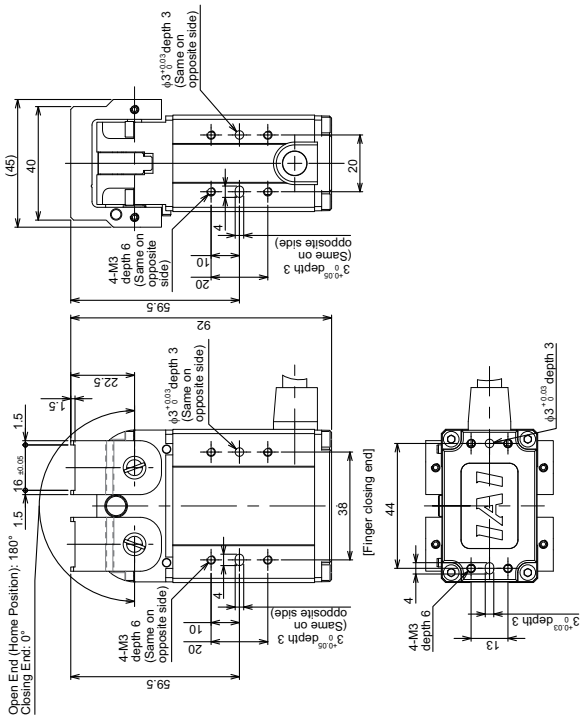

Nominal thread size	Tightening Torque	
	In the case that steel is used for the screw seating surface [N·m (kgf·m)]	In the case that aluminum is used for the screw seating surface [N·m (kgf·m)]
M3	1.54 (0.16)	0.83 (0.09)

About Tightening Screws
- Use a hex socket head cap screw for the attachment to the base.
- It is recommended to use high-tensile screws with ISO-10.9 or more.
- Make sure to have the effective length of screw engagement described below or more for the tightening of a screw and a female screw.
  When female screw is on steel → Thread length same as nominal diameter
  When female screw is on aluminum → Thread length 1.8 times longer them nominal diameter

⚠ Caution: Pay special attention when selecting the screw length. In case that an inappropriate length of a screw is applied, it may cause damage on the tapped holes or insufficiency in attachment strength, which may result in a drop in the operation accuracy or an unexpected accident.

[5] GRLL

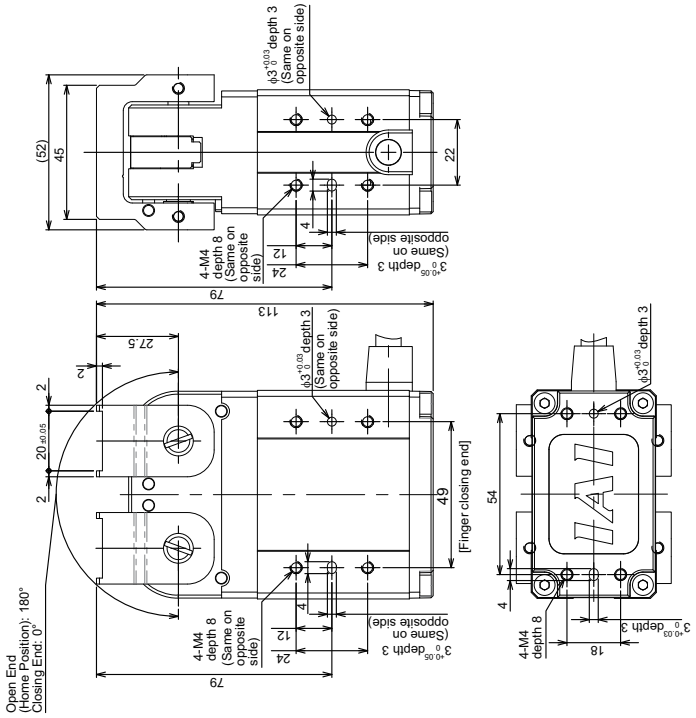

Nominal thread size	Tightening Torque	
	In the case that steel is used for the screw seating surface [N·m (kgf·m)]	In the case that aluminum is used for the screw seating surface [N·m (kgf·m)]
M4	3.59 (0.37)	1.76 (0.18)

About Tightening Screws
- Use a hex socket head cap screw for the attachment to the base.
- It is recommended to use high-tensile screws with ISO-10.9 or more.
- Make sure to have the effective length of screw engagement described below or more for the tightening of a screw and a female screw.
  When female screw is on steel → Thread length same as nominal diameter
  When female screw is on aluminum → Thread length 1.8 times longer them nominal diameter

⚠ Caution: Pay special attention when selecting the screw length. In case that an inappropriate length of a screw is applied, it may cause damage on the tapped holes or insufficiency in attachment strength, which may result in a drop in the operation accuracy or an unexpected accident.

[6] GRLW

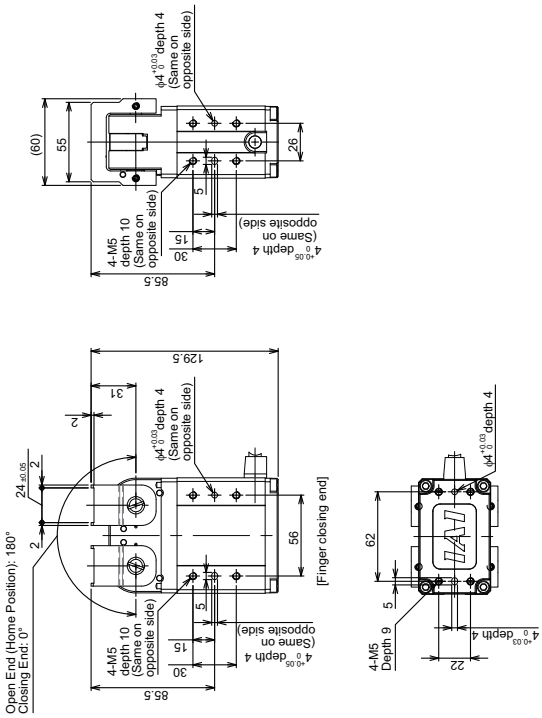

Nominal thread size	Tightening Torque	
	In the case that steel is used for the screw seating surface [N·m (kgf·m)]	In the case that aluminum is used for the screw seating surface [N·m (kgf·m)]
M5	7.27 (0.74)	3.42 (0.35)

About Tightening Screws
- Use a hex socket head cap screw for the attachment to the base.
- It is recommended to use high-tensile screws with ISO-10.9 or more.
- Make sure to have the effective length of screw engagement described below or more for the tightening of a screw and a female screw.
  When female screw is on steel → Thread length same as nominal diameter
  When female screw is on aluminum → Thread length 1.8 times longer them nominal diameter

⚠ Caution: Pay special attention when selecting the screw length. In case that an inappropriate length of a screw is applied, it may cause damage on the tapped holes or insufficiency in attachment strength, which may result in a drop in the operation accuracy or an unexpected accident.

2.3.3 How to Attach the Finger Attachment

Please prepare the finger attachment separately.

[1] Positioning of the Finger Attachment in Open/Close and Vertical Directions

For improvement of the accuracy and the repeatability of the attachment, it is recommended to position by attaching at two points, the positioning pin and the outside of the finger, as shown below. Also, have a gap of 4mm or more between the attachments so the gripped work piece can be released by turning the open/close screw at power shutoff.

[Slide type (RCP4-GRSML, GRSLL, GRSWL)]

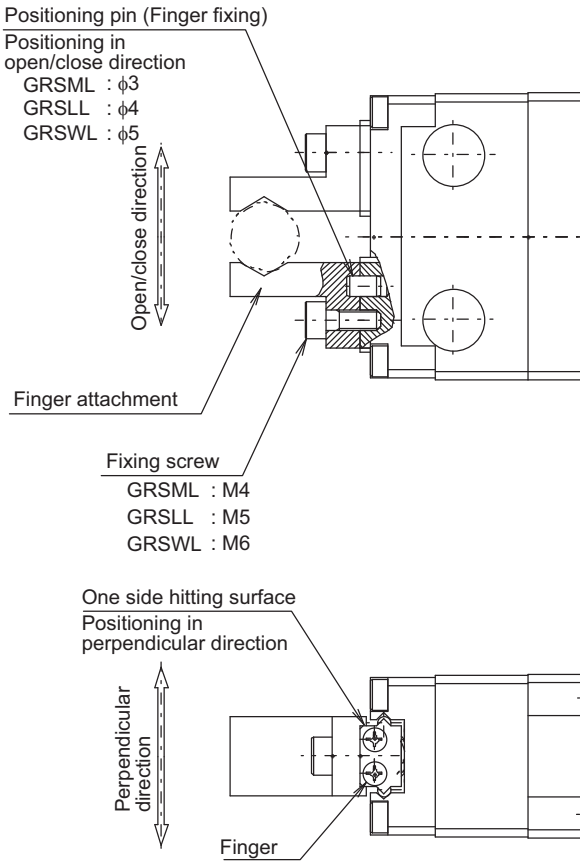

[Lever type (RCP4-GRLM, GRLL, GRLW)]

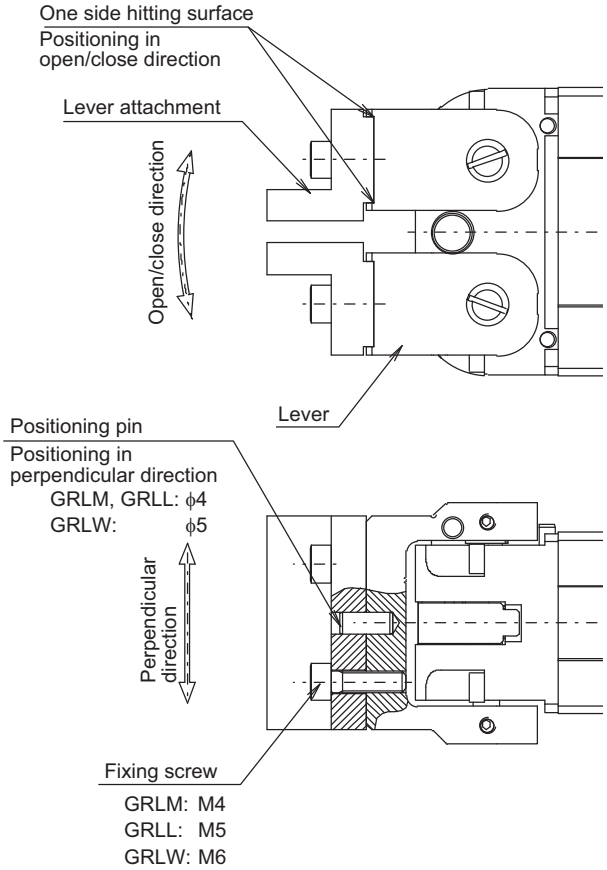

⚠ Caution:

- When attaching or detaching the finger attachment to the finger, hold the finger attachment with a tool such as a wrench to tighten the attachment screw to avoid load being applied to the guide area.
- Some finger attachment profiles may make the grip condition of a workpiece unstable. If a workpiece moves during grip, stress may get applied to the internal structure, which could cause unchucking unavailable (operation not available) or performance drop.
- The tapped hole and the positioning hole on the finger attachment are through holes. Do not attempt to use a long screw that has a length that is more than the effective thread length. Doing so may damage the internal structure.

[2] Installation Dimensions

(1) GRSML

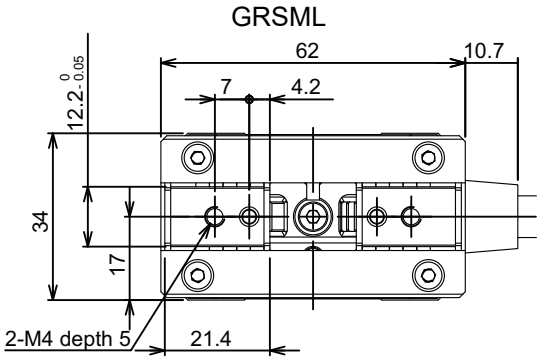

Nominal thread size	Tightening Torque	
	In the case that steel is used for the screw seating surface [N·m (kgf·m)]	In the case that aluminum is used for the screw seating surface [N·m (kgf·m)]
M4	3.59 (0.37)	1.76 (0.18)

About Tightening Screws
- Use a hex socket head cap screw for the attachment to the base.
- It is recommended to use high-tensile screws with ISO-10.9 or more.
- Make sure to have the effective length of screw engagement described below or more for the tightening of a screw and a female screw.
  When female screw is on steel → Thread length same as nominal diameter
  When female screw is on aluminum → Thread length 1.8 times longer them nominal diameter

⚠ Caution: Pay special attention when selecting the screw length. In case that an inappropriate length of a screw is applied, it may cause damage on the tapped holes or insufficiency in attachment strength, which may result in a drop in the operation accuracy or an unexpected accident.

(2) GRSLL

GRSLL

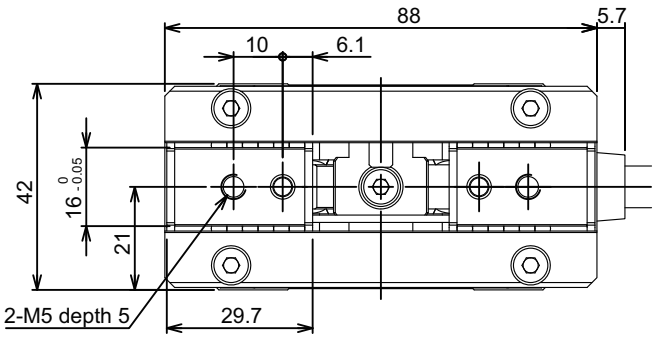

Nominal thread size	Tightening Torque	
	In the case that steel is used for the screw seating surface [N·m (kgf·m)]	In the case that aluminum is used for the screw seating surface [N·m (kgf·m)]
M5	7.27 (0.74)	3.42 (0.35)

About Tightening Screws
- Use a hex socket head cap screw for the attachment to the base.
- It is recommended to use high-tensile screws with ISO-10.9 or more.
- Make sure to have the effective length of screw engagement described below or more for the tightening of a screw and a female screw.
  When female screw is on steel → Thread length same as nominal diameter
  When female screw is on aluminum → Thread length 1.8 times longer them nominal diameter

⚠ Caution: Pay special attention when selecting the screw length. In case that an inappropriate length of a screw is applied, it may cause damage on the tapped holes or insufficiency in attachment strength, which may result in a drop in the operation accuracy or an unexpected accident.

(3) GRSWL

GRSWL

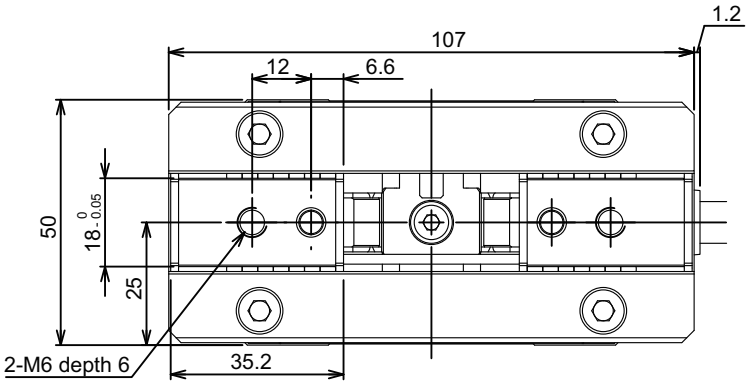

Nominal thread size	Tightening Torque	
	In the case that steel is used for the screw seating surface [N·m (kgf·m)]	In the case that aluminum is used for the screw seating surface [N·m (kgf·m)]
M6	12.3 (1.26)	5.36 (0.55)

About Tightening Screws
- Use a hex socket head cap screw for the attachment to the base.
- It is recommended to use high-tensile screws with ISO-10.9 or more.
- Make sure to have the effective length of screw engagement described below or more for the tightening of a screw and a female screw.
  When female screw is on steel → Thread length same as nominal diameter
  When female screw is on aluminum → Thread length 1.8 times longer them nominal diameter

⚠ Caution: Pay special attention when selecting the screw length. In case that an inappropriate length of a screw is applied, it may cause damage on the tapped holes or insufficiency in attachment strength, which may result in a drop in the operation accuracy or an unexpected accident.

(4) GRLM

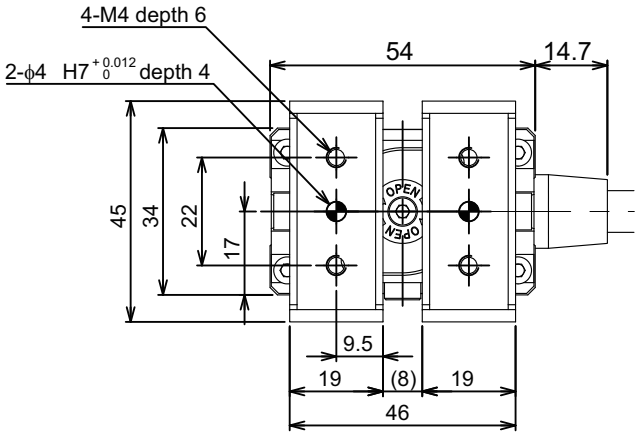

Nominal thread size	Tightening Torque	
	In the case that steel is used for the screw seating surface [N·m (kgf·m)]	In the case that aluminum is used for the screw seating surface [N·m (kgf·m)]
M4	3.59 (0.37)	1.76 (0.18)

About Tightening Screws
- Use a hex socket head cap screw for the attachment to the base.
- It is recommended to use high-tensile screws with ISO-10.9 or more.
- Make sure to have the effective length of screw engagement described below or more for the tightening of a screw and a female screw.
  When female screw is on steel → Thread length same as nominal diameter
  When female screw is on aluminum → Thread length 1.8 times longer them nominal diameter

⚠ Caution: Pay special attention when selecting the screw length. In case that an inappropriate length of a screw is applied, it may cause damage on the tapped holes or insufficiency in attachment strength, which may result in a drop in the operation accuracy or an unexpected accident.

(5) GRLL

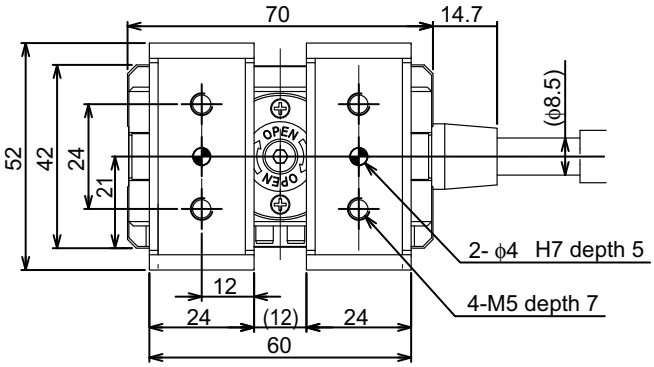

Nominal thread size	Tightening Torque	
	In the case that steel is used for the screw seating surface [N·m (kgf·m)]	In the case that aluminum is used for the screw seating surface [N·m (kgf·m)]
M5	7.27 (0.74)	3.42 (0.35)

About Tightening Screws
- Use a hex socket head cap screw for the attachment to the base.
- It is recommended to use high-tensile screws with ISO-10.9 or more.
- Make sure to have the effective length of screw engagement described below or more for the tightening of a screw and a female screw.
  When female screw is on steel → Thread length same as nominal diameter
  When female screw is on aluminum → Thread length 1.8 times longer them nominal diameter

⚠ Caution: Pay special attention when selecting the screw length. In case that an inappropriate length of a screw is applied, it may cause damage on the tapped holes or insufficiency in attachment strength, which may result in a drop in the operation accuracy or an unexpected accident.

(6) GRLW

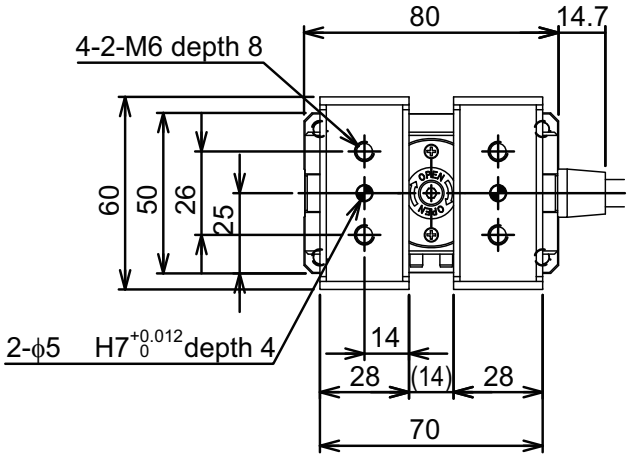

Nominal thread size	Tightening Torque	
	In the case that steel is used for the screw seating surface [N·m (kgf·m)]	In the case that aluminum is used for the screw seating surface [N·m (kgf·m)]
M6	12.3 (1.26)	5.36 (0.55)

About Tightening Screws
- Use a hex socket head cap screw for the attachment to the base.
- It is recommended to use high-tensile screws with ISO-10.9 or more.
- Make sure to have the effective length of screw engagement described below or more for the tightening of a screw and a female screw.
  When female screw is on steel → Thread length same as nominal diameter
  When female screw is on aluminum → Thread length 1.8 times longer them nominal diameter

⚠ Caution: Pay special attention when selecting the screw length. In case that an inappropriate length of a screw is applied, it may cause damage on the tapped holes or insufficiency in attachment strength, which may result in a drop in the operation accuracy or an unexpected accident.

3. Connecting with the Controller

Use the IAI dedicated connection cable for the connection of the actuator to the controller.

- If the dedicated connection cable cannot be secured, reduce the load on the cable by allowing it to deflect only by the weight of the cable or wire it in a self-standing cable hose, etc., having a large radius.
- Do not cut and reconnect the dedicated connection cable for extension or shorten the cable.
- Do not pull on the dedicated connection cable or bend it forcibly.

Please consult with IAI if you require a different kind of cable than the one supplied.
(1) For Controllers PCON, MSEP and MSEL

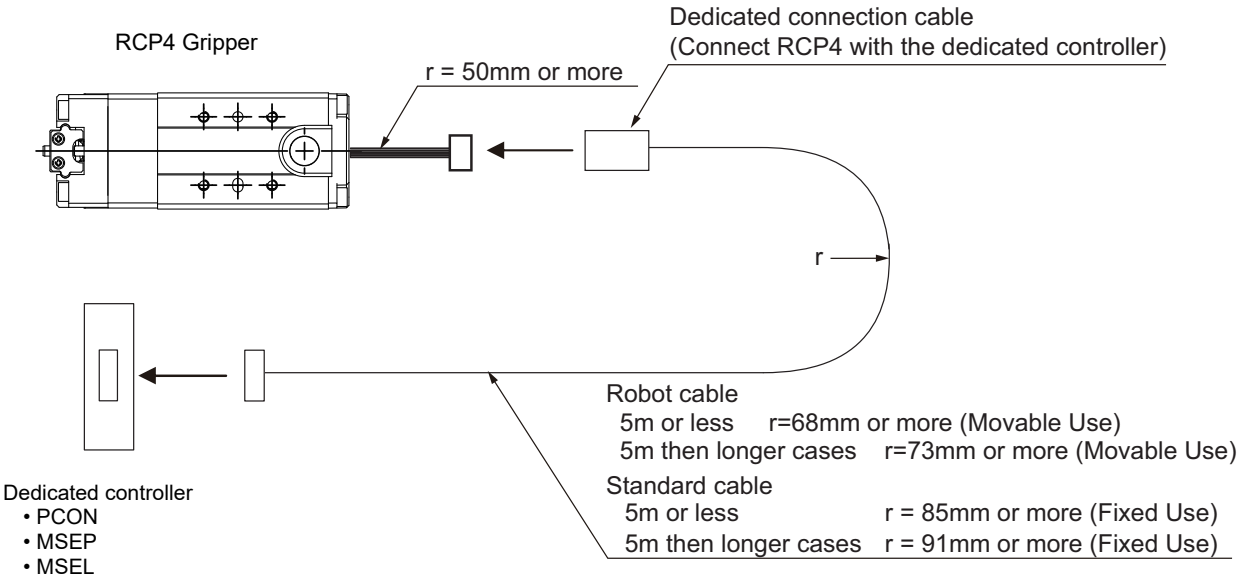

Dedicated connection cable
- Motor Encoder Integrated Cables : CB-CAN-MPA□□□
- Motor Encoder Integrated Robot Cables : CB-CAN-MPA□□□-RB
- Motor Encoder Integrated Cables 4-way connector type : CB-CAN2-MPA□□□
- Motor Encoder Integrated Robot Cables 4-way connector type : CB-CAN2-MPA□□□-RB

*) □□□ indicates the cable length. Up to 20m can be specified.
Examble) 080=8m

(2) For Controllers RCON, RSEL and RCM-P6PC

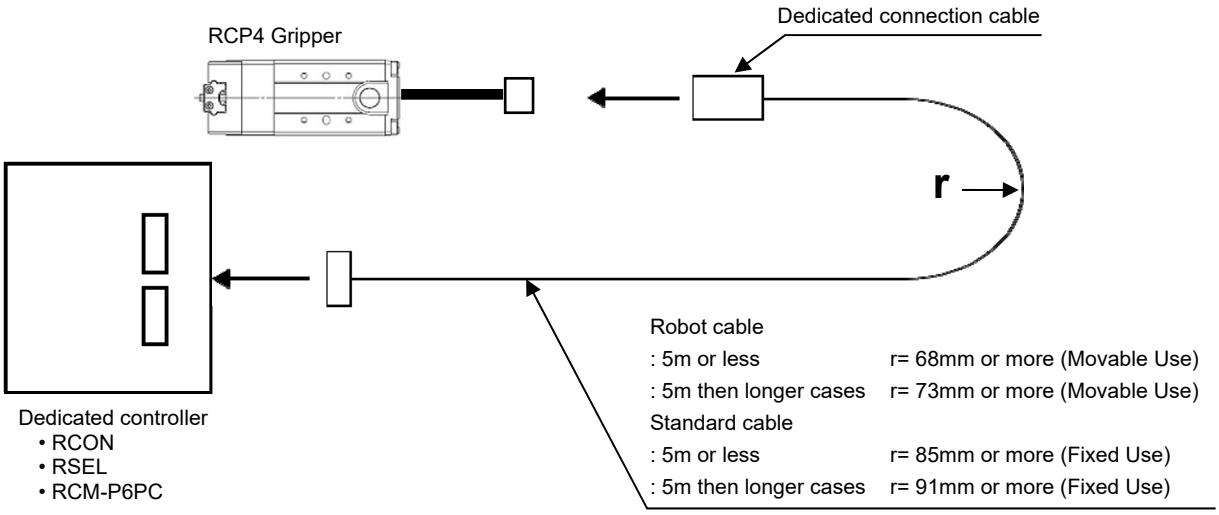

Dedicated connection cable

- Motor Encoder Integrated Cables : CB-ADPC-MPA□□□
- Motor Encoder Integrated Robot Cables : CB-ADPC-MPA□□□-RB
- Motor Encoder Integrated Cables 4-way connector type : CB-ADPC2-MPA□□□
- Motor Encoder Integrated Robot Cables 4-way connector type : CB-ADPC2-MPA□□□-RB

*) □□□ indicates the cable length. Up to 20m can be specified.
Examble) 080=8m

⚠ Warning: For wiring, please follow the warnings stated below. When constructing a system as the machinery equipment, pay attention to the wiring and connection of each cable so they are conducted properly. Not following them may cause not only a malfunction such as cable breakage or connection failure, or an operation error, but also electric shock or electric leakage, or may even cause a fire.

- Use dedicated cables of IAI indicated in this instruction manual. Contact us if you wish to have a change to the specifications of the dedicated cables.
- Make sure to turn the power off in the process of power line or cable connection or disconnection.
- Do not attempt to cut a dedicated cable with connectors on both ends to extend, shorten or re-joint it.
- Hold the dedicated cable to avoid mechanical force being applied to the terminals and connectors.
- Use a cable pipe or duct to have an appropriate protection when there is a possibility of mechanical damage on a dedicated cable.
- In case a dedicated cable is to be used at a moving part, make sure to lay out the cable without applying any force to pull the connector or extreme bend on the cable. Do not attempt to use the cable with a bending radius below the allowable value.
- Make certain that the connectors are plugged properly. Insufficient connection may cause an operation error, thus it is extremely risky.
- Do not lay out the cables to where the machine runs over them.
- Pay attention to the cable layout so it would not hit peripherals during an operation. In case it does, have an appropriate protection such as a cable carrier.
- When a cable is used hanging on the ceiling, prevent an environment that the cable swings with acceleration or wind velocity.
- Make sure there is not too much friction inside the cable storage equipment.
- Do not apply radiated heat to power line or cables.
  CB-CAN-MPA□□□, CB-CAN-MPA□□□-RB

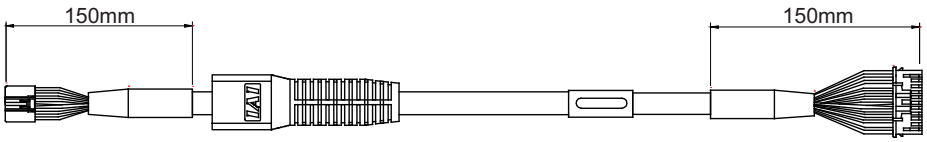

- Do not attempt to use the motor / encoder cable in a condition that the cable is bundled up in several layers such as coil winding.
  There are motor driving power line and encoder signal line in the motor / encoder cable. Therefore, if the motor / encoder cable is bundled up, the noise generated from the motor driving power line could give an influence to the encoder and may cause an error.

- Have a sufficient radius for bending, and avoid a bend concentrating on one point.

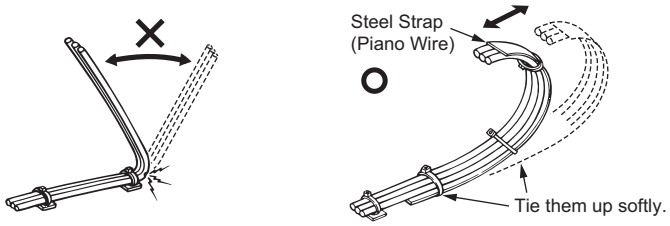

- Do not let the cable bend, kink or twist.

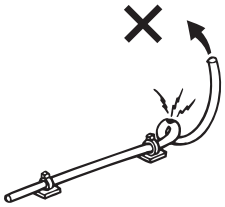

- Do not pull the cable with a strong force.

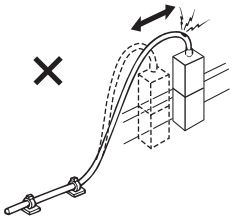

- Pay attention not to concentrate the twisting force to one point on a cable.

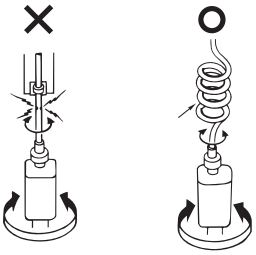

- Do not pinch, drop a heavy object onto or cut the cable.

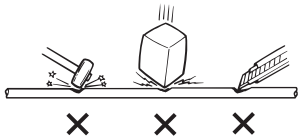

- When a cable is fastened to affix, make sure to have an appropriate force and do not tighten too much.

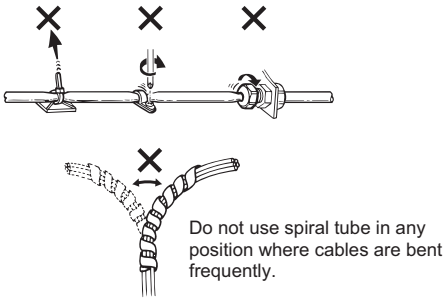

- PIO line, communication line, power and driving lines are to be put separately from each other and do not tie them together. Arrange so that such lines are independently routed in the duct.

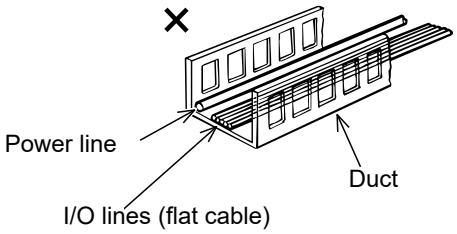

Follow the instructions below when using a cable carrier.

- If there is an indication to the cable for the space factor in a cable carrier, refer to the wiring instruction given by the supplier when storing the cable in the cable carrier.
- Avoid the cables to get twined or twisted in the cable carrier, and also to have the cables move freely and do not tie them up. (Avoid tension being applied when the cables are bent.)
  Do not pile up cables. It may cause faster abrasion of the sheaths or cable breakage.

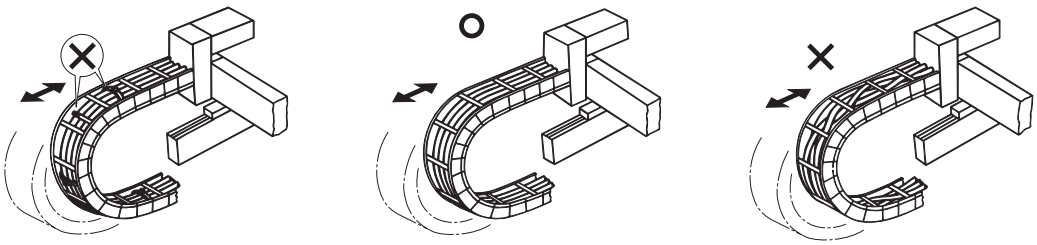

4. Operation

4.1 Operation of the Fingers

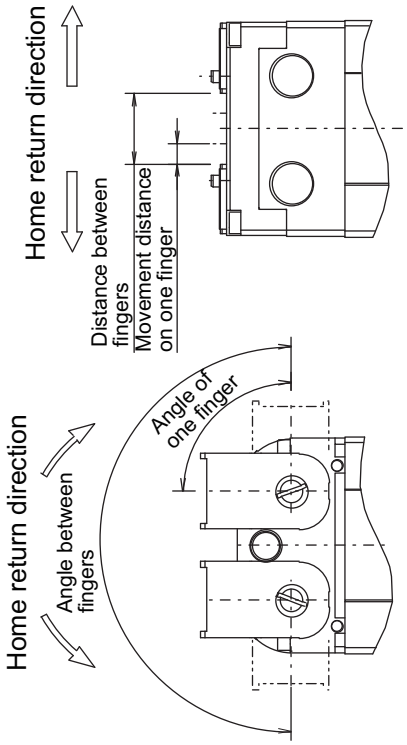

[1] Movement Stroke
The stroke stated in the specifications is the sum of the movement distance for both fingers. The movement distance of one finger is 1/2 of the stroke.

[2] Home Return Direction
The open side moving end of the finger is the home position. The home position is on the closing end for the home reversed type (NM).

[3] Position Indication
The movement distance from the home position of one finger to the closing side is the position value.
(Indication of max. position value = 1/2 of stroke)

[4] Indication of Speed and Acceleration
Indication value is the value for one finger.
Relative speed and acceleration are double of the indicated values.

		Slide Type			Lever Type		
		GRSML	GRSLL	GRSWL	GRLM	GRLL	GRLW
Stroke		14	22	30	180º	180º	180º
Movement Distance / Angle of One Side		7	11	15	90º	90º	90º
Distance / Angle between Fingers (mm)/(º)	Max.	17.6	27.8	35.8	180º	180º	180º
	Min.	3.6	5.8	5.8	0º	0º	0º

4.2 Release of the Gripped Work Piece

This gripper possesses a structure to keep the grip force by the self-locking feature even when the servo is OFF or the power to the controller is OFF.
When it is necessary to release the gripped work piece while the power is OFF, twist the open/close screw to the clockwise or detach the finger attachment to remove the work piece.

	Slide Type			Lever Type		
	GRSML	GRSLL	GRSWL	GRLM	GRLL	GRLW
Open/Close Screw Size	M3	M4	M4	M3	M4	M4
Hex Wrench Size	2.5mm	3mm	3mm	2.5mm	3mm	3mm

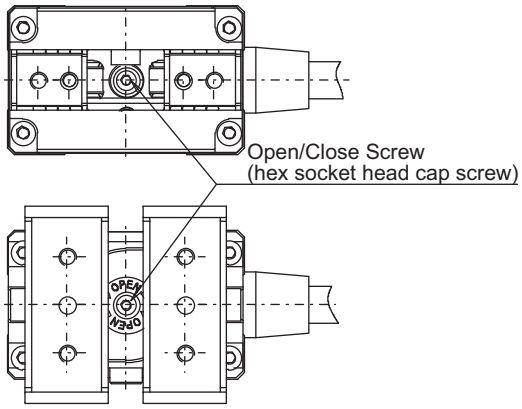

⚠ Caution:
- When the work piece removal is required at the power OFF, do not attempt to pull off the work piece forcefully to remove it. Remove the work piece either by twisting the open/close screw or detaching one side of the finger attachment.
  Pulling off the work piece forcefully may cause damage to the product.
- Remove the gripped work piece when the device would not be used for long time.
  Leaving the product with a work piece being held for a long term may drop the performance or give a bad impact to the guide.

5. Maintenance and Inspection

5.1 Inspection Items and Schedule

Perform maintenance and inspection at the intervals specified below.
This schedule assumes that the actuator is operated eight hours a day.
If the actuator is operated at a higher utilization, such as when the machine is used continuously day and night, reduce the inspection intervals accordingly.

	Visual inspection of exterior	Greasing
Start-up inspection	○	
After 1 month of operation	○	
After 6 months of operation	○	○
After 1 year of operation	○	
Every 6 months thereafter	○	○
Every 1 year	○	

5.2 Visually Inspecting the Exterior

Visually check the exterior of the following items.

Actuator	Loosening of actuator mounting screws
Cables	Scratches, connector engagement
Overall	Noise, vibration

- If the actuator is installed vertically, certain conditions may cause grease to drip from the guide. Please ensure that proper cleaning is performed and grease is replenished.

5.3 Cleaning

- Clean the exterior surface as necessary.
- Wipe dirty areas using a soft cloth, etc.
- Do not blow highly compressed air onto the actuator, as it may cause dust to enter the actuator through gaps between parts.
- Do not use petroleum-based solvent as it damages resin and coated surfaces.
- To remove stubborn stains, take neutral detergent or alcohol into a soft cloth, etc., and wipe the area gently.

5.4 Grease Supply

5.4.1 Applicable Greases for the Guide, Finger and Finger Guide

Have grease supply only to the slider type.
Applicable models: GRSML, GRSLL, GRSWL

[1] Applicable Greases

IAI uses the following grease in our plant.

Guide	Idemitsu Kosan	Daphne Grease MP No. 2

Other companies also sell similar types of grease. For details, give the above grease name to the manufacturer you want to purchase from and ask what corresponding product they have available.

Showa Shell Oil	Albania Grease S2
Mobil Oil	Unirex N2

⚠ Warning: Never use fluorine-based grease. Mixing fluorine-based grease with lithium-based grease not only reduces the performance of the grease, it may even cause damage to the actuator.

[2] How to Apply Grease

1) Apply grease by using a spatula between the guide and fingers (steel balls) (where marked with a circle) or apply grease by using a grease injector, and then slide the guide to have the grease spread out evenly.
   Wipe away the excess grease and splashed grease at last.
2) Spread out the grease evenly on the fingers and finger guides with hand.
   (for rust prevention treatment)

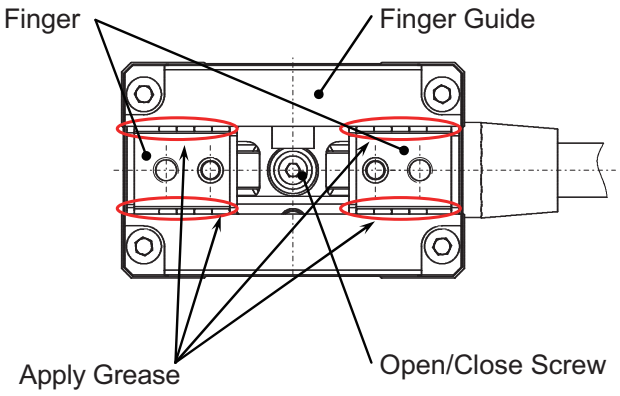

[When using lithium-based spray grease]

WAKO CHEMICAL, LTD.	Spray Grease No. A161 or equivalent

Shoot the spray grease between the guide and fingers (steel balls). Have the duration of a shot within 1 second. Slide the fingers to have the grease spread out evenly after apply grease.
Wipe away the excess grease and splashed grease at last.

⚠ Caution:
- Have the duration of a shot of the spray grease within 1 second, and do not attempt to repeat the supply 2 times or more.
  Grease supply more than necessary may cause the grease flow the electrical components, which may cause an error operation.
- In case the grease got into your eye, immediately go to see the doctor to get an appropriate care.
  After finishing the grease supply work, wash your hands carefully with water and soap to rinse the grease off.

5.4.2 Gear Area

[1] Applicable Greases

IAI uses the following grease in our plant.

Gear	Kyodo Yushi	Multitemp AC-D

Use lithium-based spray grease when having a maintenance.

WAKO CHEMICAL, LTD.	Spray Grease No. A161 or equivalent

> ⚠ Warning:
> - Never use fluorine-based grease. Mixing fluorine-based grease with lithium-based grease not only reduces the performance of the grease, it may even cause damage to the actuator.
> - Do not use spray-type oil. Make sure to use spray grease.

[2] How to Apply Grease

(1) Slide Type

Turn the open/close screw and move the fingers to the open side.
Shoot spray grease to the gear area (where marked with a circle). (2 places on right and left) Have the duration of a shot within 1 second. Slide the fingers to have the grease spread out evenly after apply grease.
Wipe away the excess grease and splashed grease at last.

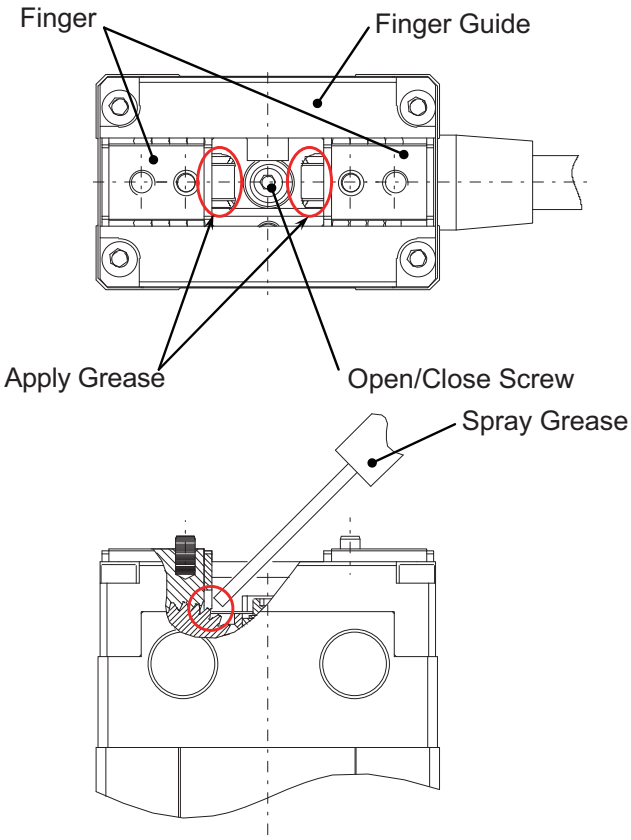

(2) Lever Type

Turn the open/close screw and move the levers to the open side.
Unscrew the cross recessed flat-head screws (M2: common for all models), and take off the frame cover to the upper direction.
After detaching the cover, shoot spray grease to the gear area. (2 places on right and left) Have the duration of a shot within 1 second. Slide the fingers to have the grease spread out evenly after apply grease.
Wipe away the excess grease and splashed grease at last.
Finally, affix the frame cover.

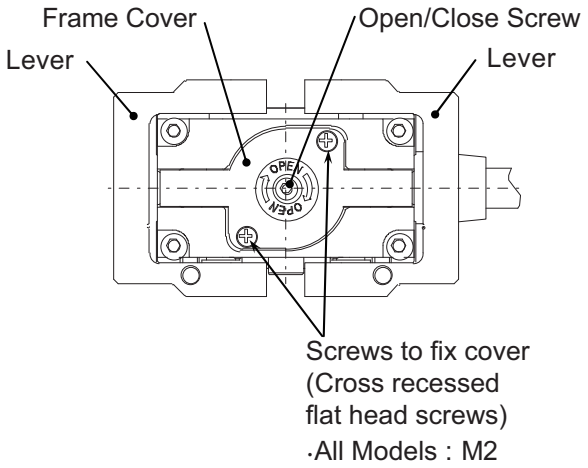

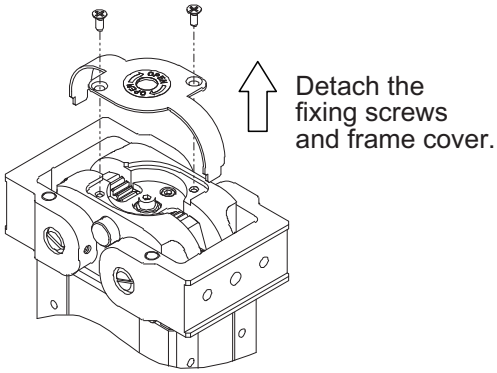

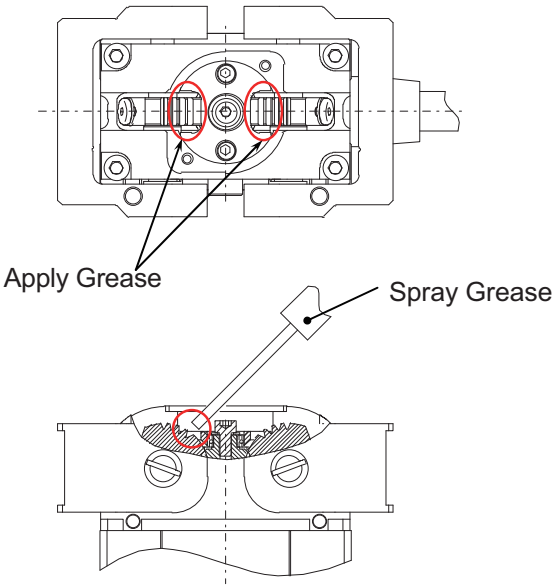

⚠ Caution:

- Have the duration of a shot of the spray grease within 1 second, and do not attempt to repeat the supply 2 times or more. Grease supply more than necessary may cause the grease flow the electrical components, which may cause an error operation.
- In case the grease got into your eye, immediately go to see the doctor to get an appropriate care. After finishing the grease supply work, wash your hands carefully with water and soap to rinse the grease off.

6. External Dimensions

6.1 GRSML

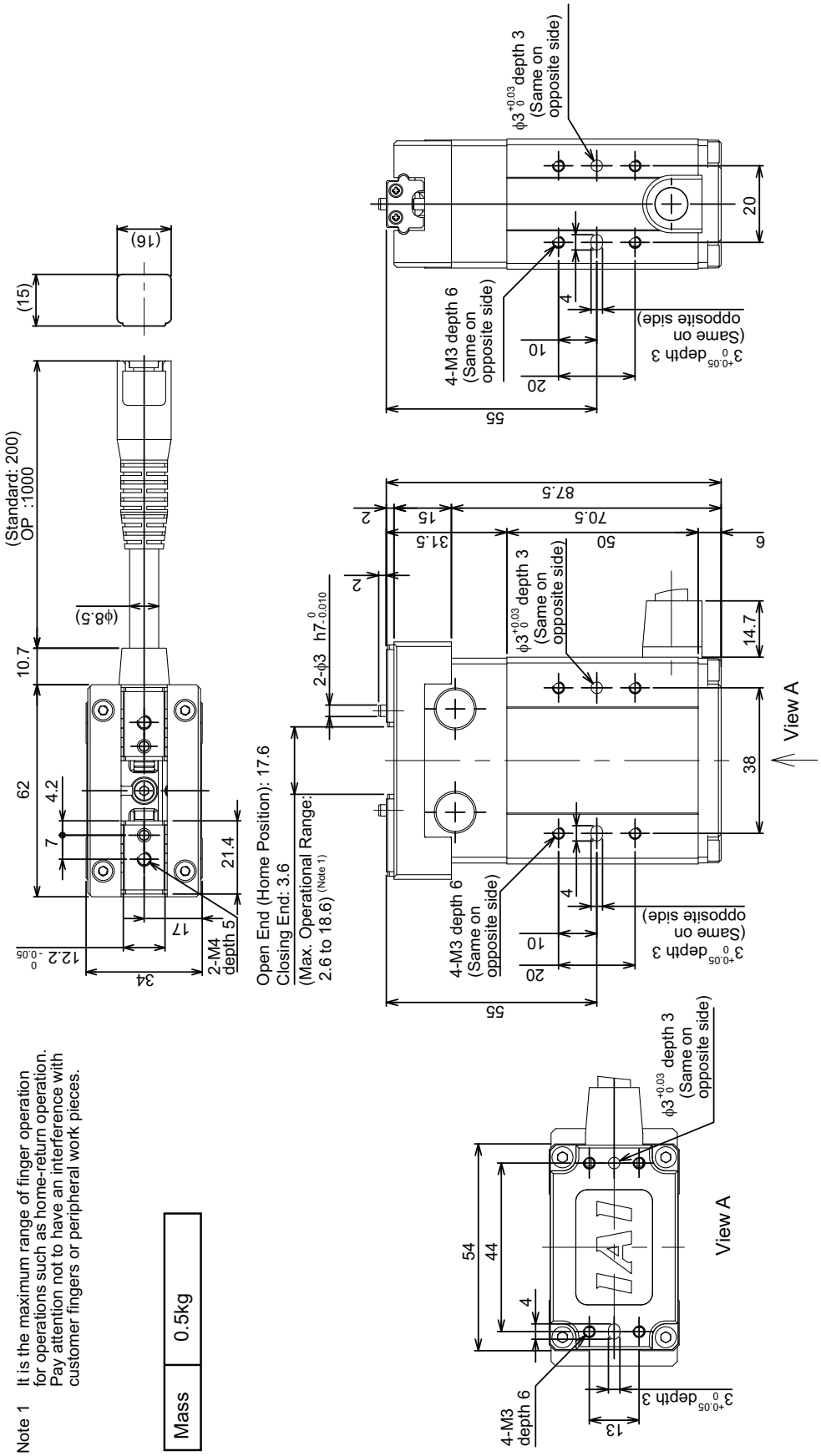

Note 1 It is the maximum range of finger operation for operations such as home-return operation. Pay attention not to have an interference with customer fingers or peripheral work pieces.

Mass	0.5kg

6.2 GRSLL

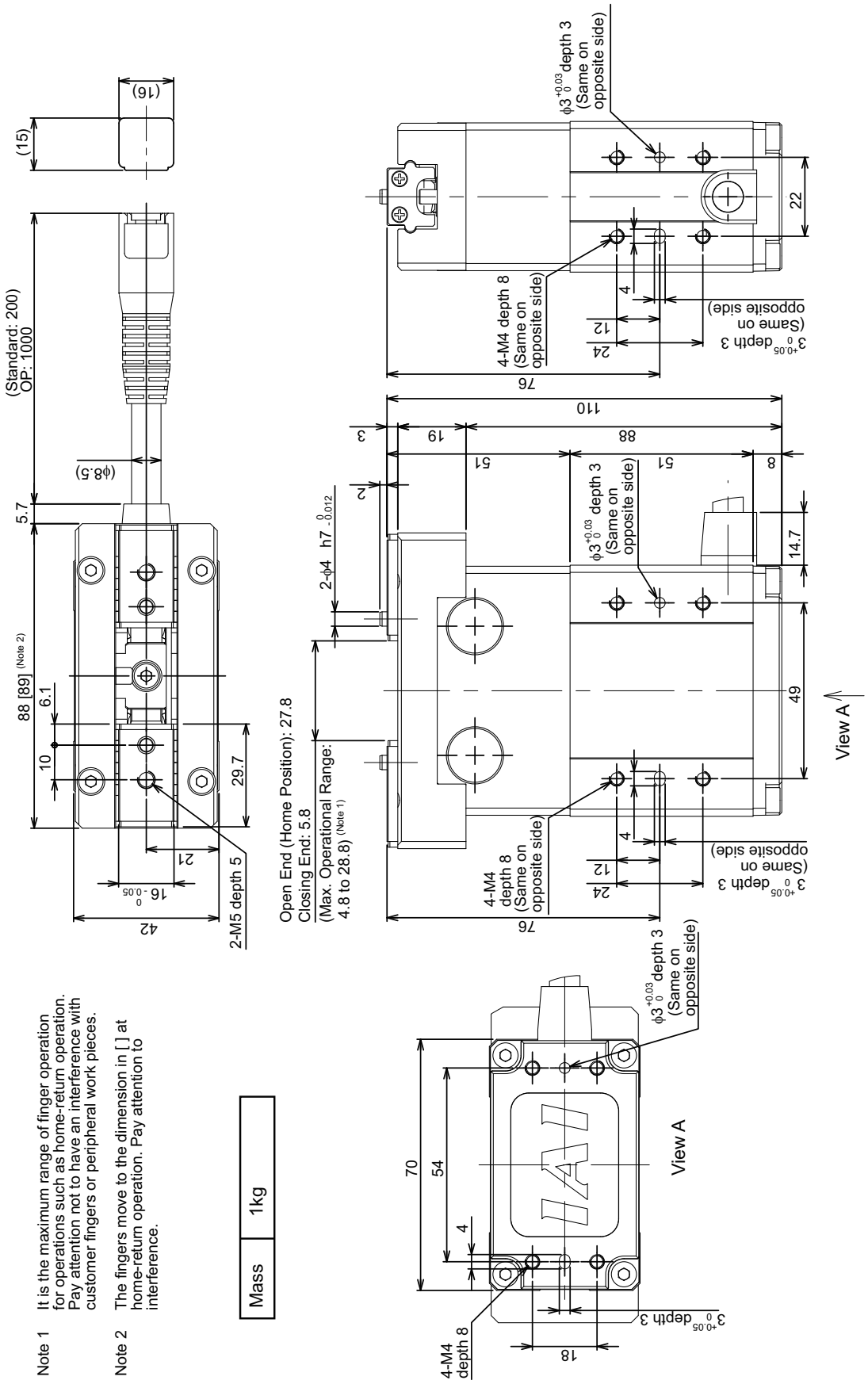

Note 1 It is the maximum range of finger operation for operations such as home-return operation. Pay attention not to have an interference with customer fingers or peripheral work pieces.

Note 2 The fingers move to the dimension in [ ] at home-return operation. Pay attention to interference.

Mass	1kg

6.3 GRSWL

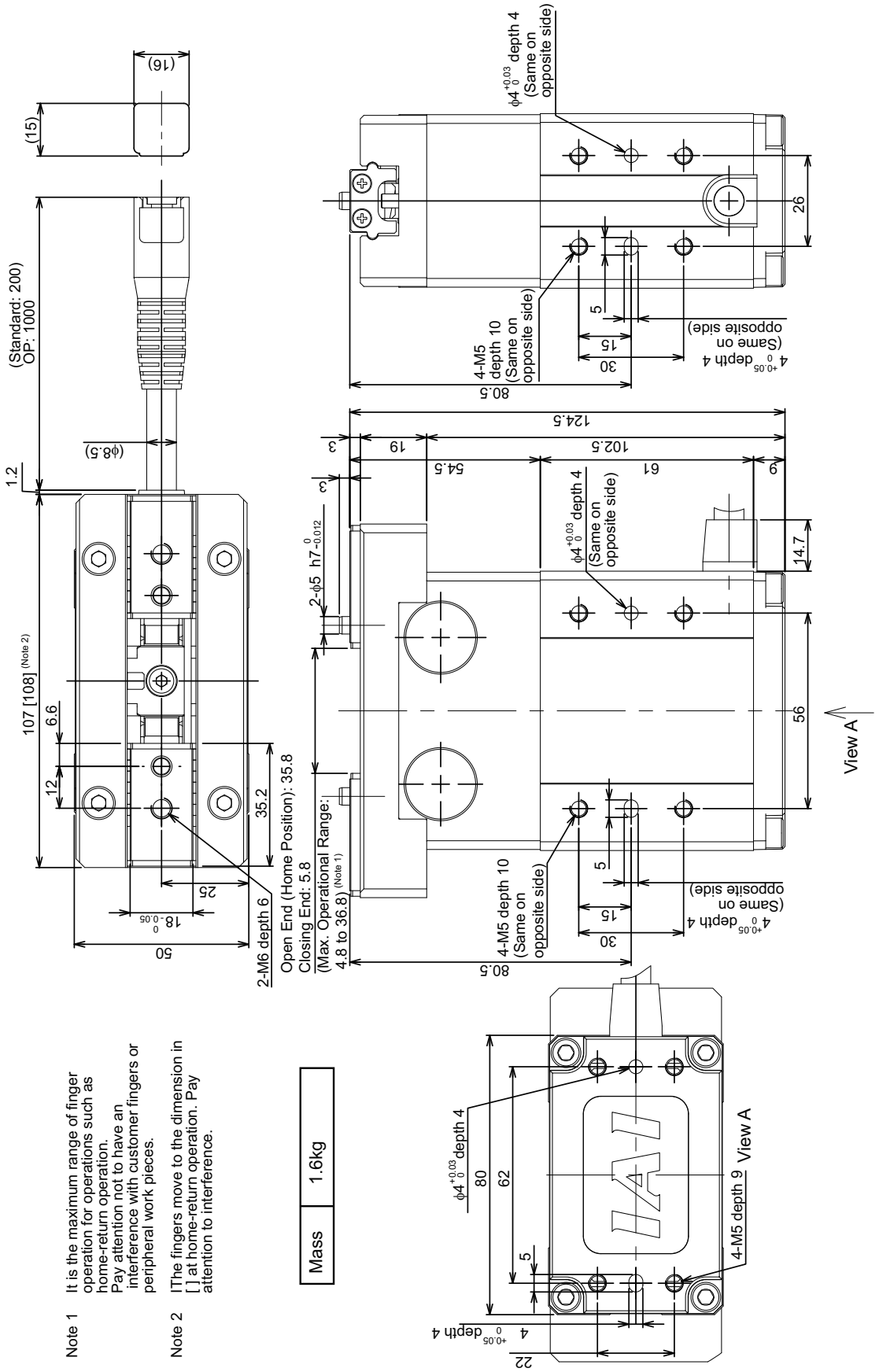

Note 1 It is the maximum range of finger operation for operations such as home-return operation. Pay attention not to have an interference with customer fingers or peripheral work pieces.

Note 2 IThe fingers move to the dimension in [ ] at home-return operation. Pay attention to interference.

Mass	1.6kg

6.4 GRLM

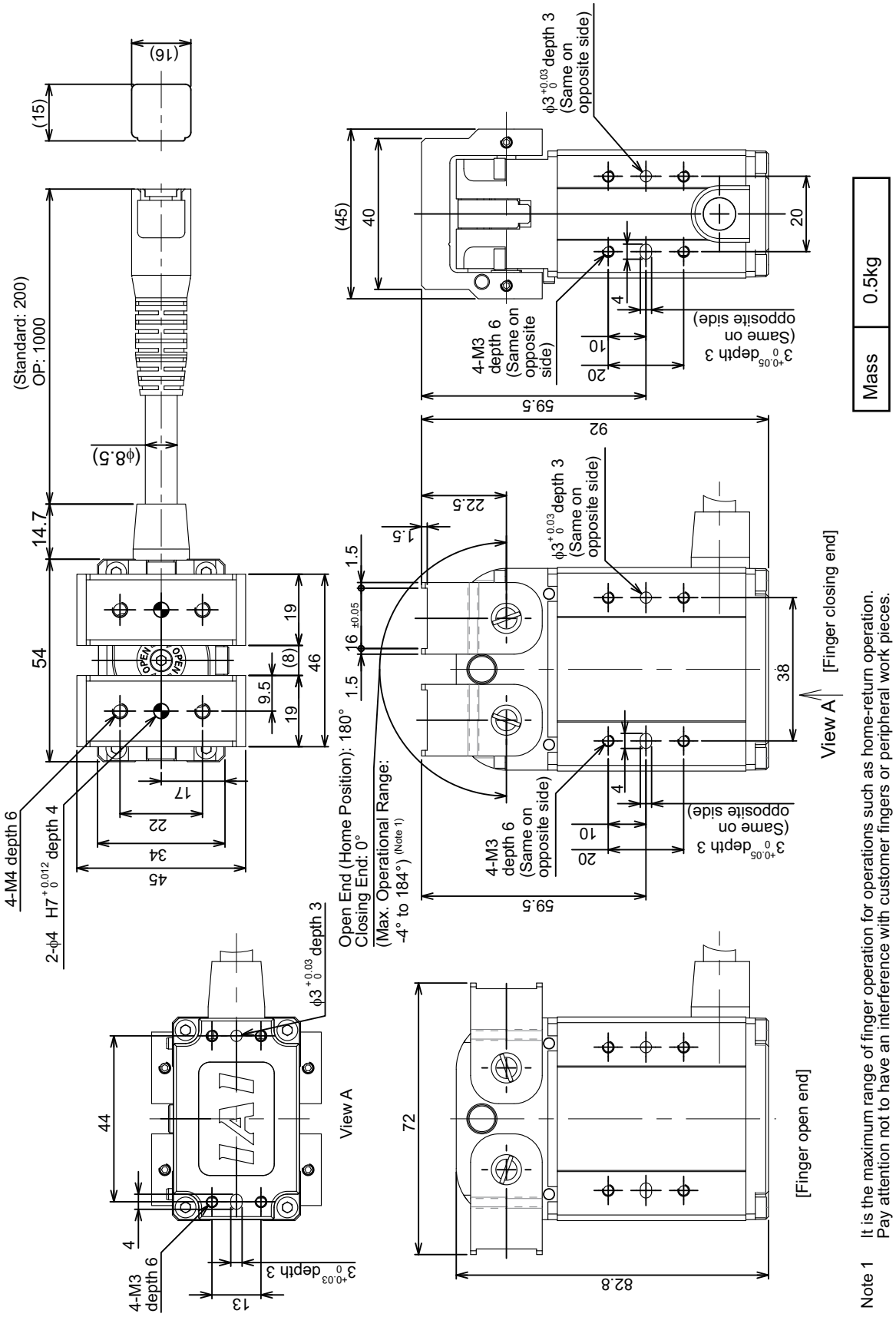

Note 1 It is the maximum range of finger operation for operations such as home-return operation. Pay attention not to have an interference with customer fingers or peripheral work pieces.

6.5 GRLL

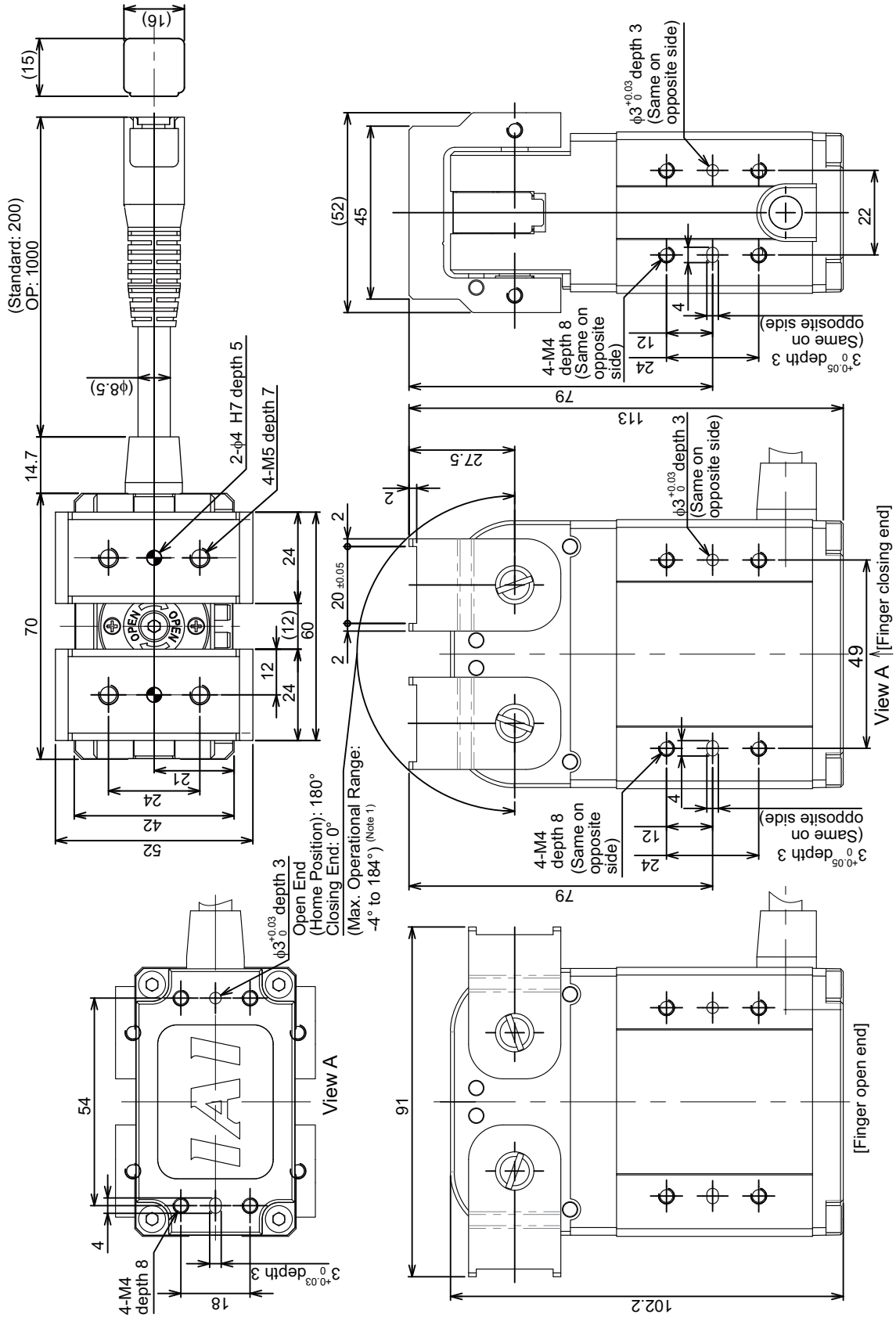

Note 1 It is the maximum range of finger operation for operations such as home-return operation.
Pay attention not to have an interference with customer fingers or peripheral work pieces.

6.6 GRLW

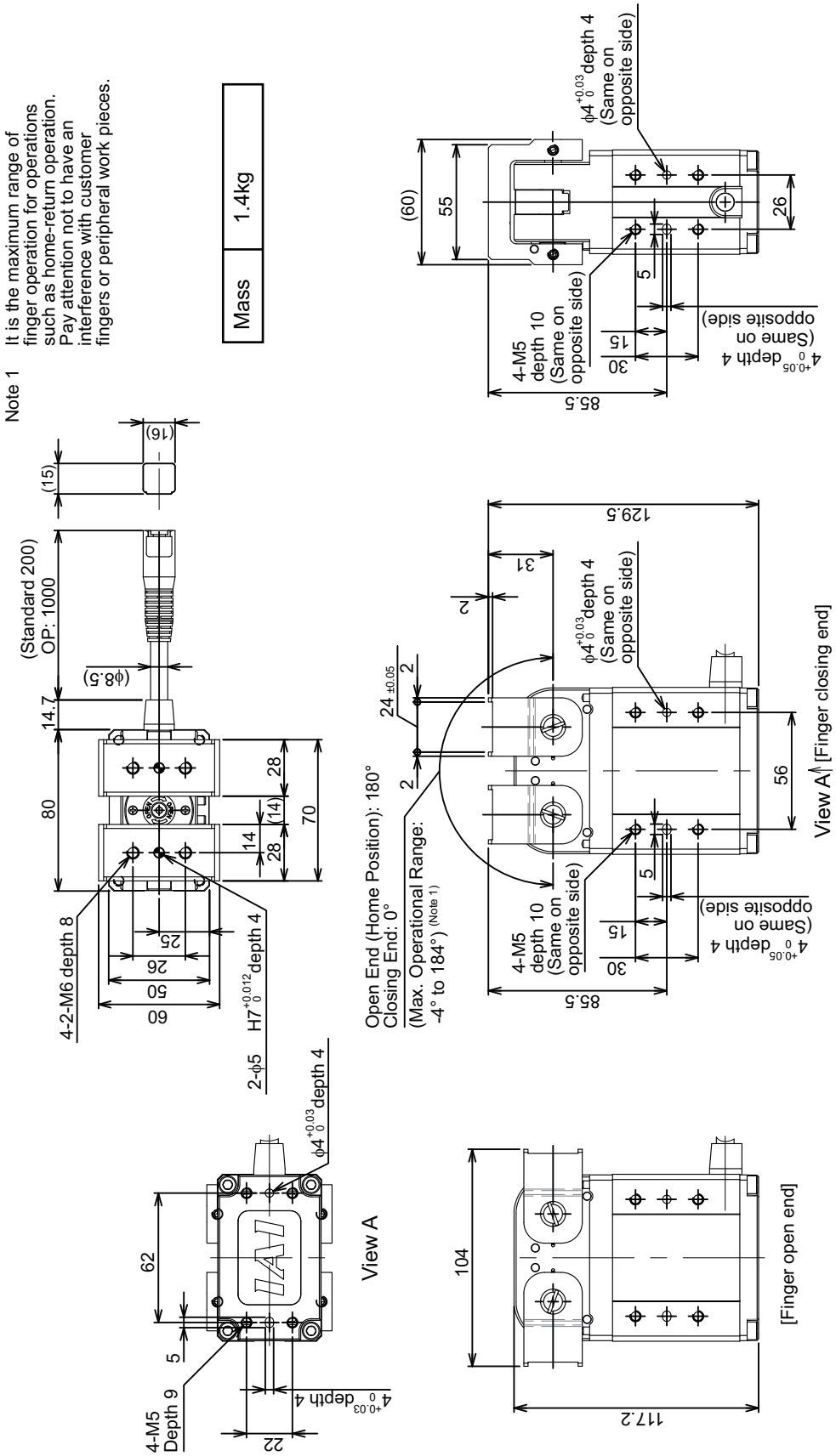
Note 1 It is the maximum range of finger operation for operations such as home-return operation. Pay attention not to have an interference with customer fingers or peripheral work pieces.
Mass 1.4kg
(Standard 200)
OP: 1000
(16)
(15)
(ϕ8.5)
14.7
80
4-2-M6 depth 8
60
50
26
25
28
14
(14)
28
70
2-ϕ5 H7 +0.012 0 depth 4
ϕ4 +0.03 0 depth 4
View A
62
5
4-M5 Depth 9
4 +0.03 0 depth 4
22
Open End (Home Position): 180°
Closing End: 0°
(Max. Operational Range: -4° to 184°) (Note 1)
24 ±0.05
2
2
31
129.5
ϕ4 +0.03 0 depth 4 (Same on opposite side)
56
4-M5 depth 10 (Same on opposite side)
4 +0.05 0 depth 4 (Same on opposite side)
15
30
5
85.5
View A [Finger closing end]
104
117.2
[Finger open end]
(60)
55
26

7. Warranty

7.1 Warranty Period

One of the following periods, whichever is shorter:
- 18 months after shipment from IAI
- 12 months after delivery to the specified location
- 2,500 hours of operation

7.2 Scope of the Warranty

Our products are covered by warranty when all of the following conditions are met. Faulty products covered by warranty will be replaced or repaired free of charge:
(1) The breakdown or problem in question pertains to our product as delivered by us or our authorized dealer.
(2) The breakdown or problem in question occurred during the warranty period.
(3) The breakdown or problem in question occurred while the product was in use for an appropriate purpose under the conditions and environment of use specified in the instruction manual and catalog.
(4) The breakdown of problem in question was caused by a specification defect or problem, or by a quality issue with our product.

Note that breakdowns due to any of the following reasons are excluded from the scope of warranty:
[1] Anything other than our product
[2] Modification or repair performed by a party other than us (unless we have approved such modification or repair)
[3] Anything that could not be easily predicted with the level of science and technology available at the time of shipment from our company
[4] A natural disaster, man-made disaster, incident or accident for which we are not liable
[5] Natural fading of paint or other symptoms of aging
[6] Wear, depletion or other expected result of use
[7] Operation noise, vibration or other subjective sensation not affecting function or maintenance

Note that the warranty only covers our product as delivered and that any secondary loss arising from a breakdown of our product is excluded from the scope of warranty.

7.3 Honoring the Warranty

As a rule, the product must be brought to us for repair under warranty.

7.4 Limited Liability

(1) We shall assume no liability for any special damage, consequential loss or passive loss such as a loss of expected profit arising from or in connection with our product.
(2) We shall not be liable for any program or control method created by the customer to operate our product or for the result of such program or control method.

7.5 Conditions of Conformance with Applicable Standards/Regulations, Etc., and Applications

(1) If our product is combined with another product or any system, device, etc., used by the customer, the customer must first check the applicable standards, regulations and/or rules. The customer is also responsible for confirming that such combination with our product conforms to the applicable standards, etc. In such a case we will not be liable for the conformance of our product with the applicable standards, etc.

(2) Our product is for general industrial use. It is not intended or designed for the applications specified below, which require a high level of safety. Accordingly, as a rule our product cannot be used in these applications. Contact us if you must use our product for any of these applications:
   [1] Medical equipment pertaining to maintenance or management of human life or health
   [2] A mechanism or mechanical equipment intended to move or transport people (such as a vehicle, railway facility or aviation facility)
   [3] Important safety parts of mechanical equipment (such as safety devices)
   [4] Equipment used to handle cultural assets, art or other irreplaceable items

(3) Contact us at the earliest opportunity if our product is to be used in any condition or environment that differs from what is specified in the catalog or instruction manual.

7.6 Other Items Excluded from Warranty

The price of the product delivered to you does not include expenses associated with programming, the dispatch of engineers, etc. Accordingly, a separate fee will be charged in the following cases even during the warranty period:

[1] Guidance for installation/adjustment and witnessing of test operation
[2] Maintenance and inspection
[3] Technical guidance and education on operating/wiring methods, etc.
[4] Technical guidance and education on programming and other items related to programs

Change History

Revision Date	Description of Revision
October 2013	First edition
January 2014	Second edition Pg. 27 Connection diagram change of the Motor • Encoder Integrated Cables Pg. 28 Motor • Encoder Integrated Cables Robot Type added
February 2014	Third edition Pg. 13 Finger Guide Structure deleted from [2] Lever Type table
May 2014	Edition 3B Pg. 46 Deleted description “The actuator cable is for fixed use.”
June 2015	Edition 3D Pg. 53 Grease change due to production stop Albania Grease No.2 → Albania Grease S2 Mobilux 2 → Unirex N2
August 2015	Edition 3E Pg. 9 Note added to notify rust prevention treatment should be implemented in case of removing grease on fingers and finger guides after delivery Pg. 55 Grease supply added for fingers and finger guides
December 2015	Edition 3F Pg. 16 Contents of SEL system controllers added in caution
February 2016	Edition 3G Pg. 26 Correction made Calculation formula of the “Torque generated to the finger by an external force.” $10^{-6} \rightarrow 10^{-3}$
March 2017	Edition 3H Pg. 49 Caution not added stating not to attempt to bundle motor / encoder cable up such as coil winding
May 2019	Edition 3I Pg. 16 Description added stating 20deg/s of velocity for lever type
August 2019	Edition 3J Pg. 40 Correction made Fixing screw GRSML M3 → M4 GRSLL M4 → M5 GRSWL M5 → M6 Pg. 54 Grease changed from Daphne Eponex Grease No. 2 to Daphne Grease MP No. 2

Revision Date	Description of Revision
January 2021	Edition 3K Pg. 13, 27 Anti-rust black coating option added
September 2024	Edition 3L Pg. 10 Complied with RoHS3 Directive Pg. 12 Enclosed DVD abolished 1.1.2 Descriptions added for Instruction Manuals for the Controllers Related to this Product Pg. 13 1.1.4 Addition and correction made for controllers applicable for model code Pg. 40 2.3.3 Caution note added regarding finger attachement Pg. 56 5.4.2 Correction made to grease name Minor corrections made
October 2025	Edition 3M Changes due to discontinuation of including the First Step Guide
June 2026	Edition 3N Terms integrated (cable carrier)

Manual No.:ME3730-3N (June 2026)

Quality and Innovation

IAI Corporation

Head Office: 1210 Ihara Shimizu-KU Shizuoka City Shizuoka 424-0114, Japan
TEL +81-54-364-5105 FAX +81-54-364-2589
website: www.iai-robot.co.jp/

IAI America, Inc.

Head Office: 2690 W. 237th Street, Torrance, CA 90505
TEL +1-310-891-6015 FAX +1-310-891-0815
Chicago Office: 110 East State Parkway, Schaumburg, IL 60173
TEL +1-847- 908-1400 FAX +1-847-908-1399
Atlanta Office: 1220 Kennestone Circle, Suite 108, Marietta, GA 30066
TEL +1-678-354-9470 FAX +1-678-354-9471
website: www.intelligentactuator.com

Technical Support available in Europe

IAI Industrieroboter GmbH

Ober der Röth 4, D-65824 Schwalbach am Taunus, Germany
TEL +49(0)6196-88950 FAX +49(0)6196-889524
website: www.iai-automation.com

Technical Support available in Great Britain

LC Automation
control & safety

Duttons Way, Shadsworth Business Park, Blackburn, Lancashire, BB1 2QR, United Kingdom
TEL +44(0) 1254-685900
website: www.lcautomation.com

IAI (Shanghai) Co., Ltd.

SHANGHAI JIAHUA BUSINESS CENTER A8-303, 808, Hongqiao Rd. Shang hai 200030, China
TEL +86-21-6448-4753 FAX +86-21-6448-3992
website: www.iai-robot.com

IAI Robot (Thailand) Co., Ltd.

825 PhairojKijja Tower 7th Floor, Debaratana RD., Bangna Nuea, Bangna, Bangkok 10260, Thailand
TEL +66-2-361-4458 FAX +66-2-361-4456
website: www.iai-robot.co.th

The information contained in this document is subject to change without notice for purposes of product improvement.
Copyright © 2026.Jun. IAI Corporation.AII rights reserved.

26.06.000