ROBO CYLINDER

ROBO Cylinder
RCP6 Actuators
Gripper Type

Instruction Manual

First Edition

Slide Type: GRT7A, GRT7B

IAI Corporation

Please Read Before Use

Thank you for purchasing our product.

This instruction manual explains the handling methods, structure and maintenance of this product, providing the information you need in order to use the product safely.

Before using the product, be sure to read this manual and fully understand the contents explained herein to ensure safe use of the product.

Please downloaded the user's manual from our website.
You can download it free of charge. User registration is required for the first time downloading.
URL : www.iai-robot.co.jp/data_dl/CAD_MANUAL/

When using the product, print out of the necessary portions of the relevant manual, or please display it on your computer, tablet terminal, etc. so that you can check it immediately.

After reading the instruction manual, keep it in a convenient place so that whoever is handling the product can refer to it quickly when necessary.

[Important]

- This instruction manual is an original document dedicated for this product.
- This product cannot be used in ways not shown in this instruction manual. IAI shall not be liable for any result whatsoever arising from the use of the product in any other way than what is noted in the manual.
- The information contained in this instruction manual is subject to change without notice for the purpose of product improvement.
- If any issues arise regarding the information contained in this instruction manual, contact our customer center or the nearest sales office.
- Use or reproduction of this instruction manual in full or in part without permission is prohibited.
- The company names, names of products and trademarks of each company shown in the text are registered trademarks.

Table of Contents

Safety Guide 1

Caution in Handling 8

International Standards Compliances 9

Name of Parts 10

1. Specifications Check 13
   - 1.1 Checking the Product 13
     - 1.1.1 Parts 13
     - 1.1.2 Instruction Manuals for the Controllers Related to this Product 13
     - 1.1.3 How to Read the Model Nameplate 13
     - 1.1.4 How to Read the Model Number 14
   - 1.2 Specifications 15
     - 1.2.1 Common 15
     - 1.2.2 Relation between the Current Limit Value and the Grip Force 16
     - 1.2.3 Duty in Continuous Operation 18
   - 1.3 Operating Conditions 19
     - 1.3.1 Grip Force 19
   - 1.4 Option 24
     - 1.4.1 Reversed-home Specification (Model: NM) 24
     - 1.4.2 Changing Actuator Cable Length (Model: AC1, AC2, AC3) 24
     - 1.4.3 Changing Direction of Ejection for Rear Cable Ejection (Model: CJTB, CJLB, CJRB, CJBB) 24
     - 1.4.4 Changing Direction of Ejection for Side Cable Ejection (Model: CJTS, CJLS, CJRS, CJBS) 24
   - 1.5 Motor • Encoder Cables 25
     - 1.5.1 Connection Cable Dedicated for Models Except for RCON and RCM-P6PC 25
     - 1.5.2 Connection Cable Dedicated for RCON and RCM-P6PC 27

2. Installation 29
   - 2.1 Transportation 29
   - 2.2 Installation and Storage • Preservation Environment 31
   - 2.3 How to Install 32
     - 2.3.1 Installation 32
     - 2.3.2 Installation of the Main Unit 33
     - 2.3.3 How to Attach the Finger Attachment 40

3. Connecting with the Controller 45

4. Operation 51
   - 4.1 Operation of the Fingers 51
   - 4.2 Release of the Gripped Work Piece 52

5. Maintenance and Inspection 53
   - 5.1 Inspection Items and Schedule 53
   - 5.2 Visually Inspecting the Exterior 53
   - 5.3 Cleaning 53
   - 5.4 Grease Supply 54
     - 5.4.1 Applicable Greases for the Guide 54
     - 5.4.2 Trapezoid Thread Area 55

6. External Dimensions 57
   - 6.1 GRT7A 57
   - 6.2 GRT7B Stroke 40mm 59
   - 6.3 GRT7B Stroke 80mm 61

7. Warranty 63
7.1 Warranty Period 63
7.2 Scope of the Warranty 63
7.3 Honoring the Warranty 63
7.4 Limited Liability 64
7.5 Conditions of Conformance with Applicable Standards/Regulations, Etc., and Applications 64
7.6 Other Items Excluded from Warranty 64
Change History 65

Safety Guide

“Safety Guide” has been written to use the machine safely and so prevent personal injury or property damage beforehand. Make sure to read it 1before the operation of this product.

Safety Precautions for Our Products

The common safety precautions for the use of any of our robots in each operation.

No.		Description
1	Model Selection	● This product has not been planned and designed for the application where high level of safety is required, so the guarantee of the protection of human life is impossible. Accordingly, do not use it in any of the following applications. 1) Medical equipment used to maintain, control or otherwise affect human life or physical health. 2) Mechanisms and machinery designed for the purpose of moving or transporting people (For vehicle, railway facility or air navigation facility) 3) Important safety parts of machinery (Safety device, etc.) ● Do not use the product outside the specifications. Failure to do so may considerably shorten the life of the product. ● Do not use it in any of the following environments. 1) Location where there is any inflammable gas, inflammable object or explosive 2) Place with potential exposure to radiation 3) Location with the ambient temperature or relative humidity exceeding the specification range 4) Location where radiant heat is added from direct sunlight or other large heat source 5) Location where condensation occurs due to abrupt temperature changes 6) Location where there is any corrosive gas (sulfuric acid or hydrochloric acid) 7) Location exposed to significant amount of dust, salt or iron powder 8) Location subject to direct vibration or impact ● For an actuator used in vertical orientation, select a model which is equipped with a brake. If selecting a model with no brake, the moving part may drop when the power is turned OFF and may cause an accident such as an injury or damage on the work piece.

No.		Description
2	Transportation	● When carrying a heavy object, do the work with two or more persons or utilize equipment such as crane. ● When the work is carried out with 2 or more persons, make it clear who is to be the leader and who to be the follower(s) and communicate well with each other to ensure the safety of the workers. ● When in transportation, consider well about the positions to hold, weight and weight balance and pay special attention to the carried object so it would not get hit or dropped. ● Transport it using an appropriate transportation measure. The actuators available for transportation with a crane have eyebolts attached or there are tapped holes to attach bolts. Follow the instructions in the instruction manual for each model. ● Do not step or sit on the package. ● Do not put any heavy thing that can deform the package, on it. ● When using a crane capable of 1t or more of weight, have an operator who has qualifications for crane operation and sling work. ● When using a crane or equivalent equipments, make sure not to hang a load that weighs more than the equipment's capability limit. ● Use a hook that is suitable for the load. Consider the safety factor of the hook in such factors as shear strength. ● Do not get on the load that is hung on a crane. ● Do not leave a load hung up with a crane. ● Do not stand under the load that is hung up with a crane.
3	Storage and Preservation	● The storage and preservation environment conforms to the installation environment. However, especially give consideration to the prevention of condensation. ● Store the products with a consideration not to fall them over or drop due to an act of God such as earthquake.
4	Installation and Start	(1) Installation of Robot Main Body and Controller, etc. ● Make sure to securely hold and fix the product (including the work part). A fall, drop or abnormal motion of the product may cause a damage or injury. Also, be equipped for a fall-over or drop due to an act of God such as earthquake. ● Do not get on or put anything on the product. Failure to do so may cause an accidental fall, injury or damage to the product due to a drop of anything, malfunction of the product, performance degradation, or shortening of its life. ● When using the product in any of the places specified below, provide a sufficient shield. 1) Location where electric noise is generated 2) Location where high electrical or magnetic field is present 3) Location with the mains or power lines passing nearby 4) Location where the product may come in contact with water, oil or chemical droplets

No.		Description
4	Installation and Start	(2) Cable Wiring ● Use our company's genuine cables for connecting between the actuator and controller, and for the teaching tool. ● Do not scratch on the cable. Do not bend it forcibly. Do not pull it. Do not coil it around. Do not insert it. Do not put any heavy thing on it. Failure to do so may cause a fire, electric shock or malfunction due to leakage or continuity error. ● Perform the wiring for the product, after turning OFF the power to the unit, so that there is no wiring error. ● When the direct current power (+24V) is connected, take the great care of the directions of positive and negative poles. If the connection direction is not correct, it might cause a fire, product breakdown or malfunction. ● Connect the cable connector securely so that there is no disconnection or looseness. Failure to do so may cause a fire, electric shock or malfunction of the product. ● Never cut and/or reconnect the cables supplied with the product for the purpose of extending or shortening the cable length. Failure to do so may cause the product to malfunction or cause fire.
		(3) Grounding ● The grounding operation should be performed to prevent an electric shock or electrostatic charge, enhance the noise-resistance ability and control the unnecessary electromagnetic radiation. ● For the ground terminal on the AC power cable of the controller and the grounding plate in the control panel, make sure to use a twisted pair cable with wire thickness 0.5mm^2 (AWG20 or equivalent) or more for grounding work. For security grounding, it is necessary to select an appropriate wire thickness suitable for the load. Perform wiring that satisfies the specifications (electrical equipment technical standards). ● Perform Class D Grounding (former Class 3 Grounding with ground resistance 100 or below).

No.		Description
4	Installation and Start	(4) Safety Measures ● When the work is carried out with 2 or more persons, make it clear who is to be the leader and who to be the follower(s) and communicate well with each other to ensure the safety of the workers. ● When the product is under operation or in the ready mode, take the safety measures (such as the installation of safety and protection fence) so that nobody can enter the area within the robot's movable range. When the robot under operation is touched, it may result in death or serious injury. ● Make sure to install the emergency stop circuit so that the unit can be stopped immediately in an emergency during the unit operation. ● Take the safety measure not to start up the unit only with the power turning ON. Failure to do so may start up the machine suddenly and cause an injury or damage to the product. ● Take the safety measure not to start up the machine only with the emergency stop cancellation or recovery after the power failure. Failure to do so may result in an electric shock or injury due to unexpected power input. ● When the installation or adjustment operation is to be performed, give clear warnings such as "Under Operation; Do not turn ON the power!" etc. Sudden power input may cause an electric shock or injury. ● Take the measure so that the work part is not dropped in power failure or emergency stop. ● Wear protection gloves, goggle or safety shoes, as necessary, to secure safety. ● Do not insert a finger or object in the openings in the product. Failure to do so may cause an injury, electric shock, damage to the product or fire. ● When releasing the brake on a vertically oriented actuator, exercise precaution not to pinch your hand or damage the work parts with the actuator dropped by gravity.
5	Teaching	● When the work is carried out with 2 or more persons, make it clear who is to be the leader and who to be the follower(s) and communicate well with each other to ensure the safety of the workers. ● Perform the teaching operation from outside the safety protection fence, if possible. In the case that the operation is to be performed unavoidably inside the safety protection fence, prepare the "Stipulations for the Operation" and make sure that all the workers acknowledge and understand them well. ● When the operation is to be performed inside the safety protection fence, the worker should have an emergency stop switch at hand with him so that the unit can be stopped any time in an emergency. ● When the operation is to be performed inside the safety protection fence, in addition to the workers, arrange a watchman so that the machine can be stopped any time in an emergency. Also, keep watch on the operation so that any third person can not operate the switches carelessly. ● Place a sign "Under Operation" at the position easy to see. ● When releasing the brake on a vertically oriented actuator, exercise precaution not to pinch your hand or damage the work parts with the actuator dropped by gravity. * Safety protection Fence : In the case that there is no safety protection fence, the movable range should be indicated.

No.		Description
6	Trial Operation	● When the work is carried out with 2 or more persons, make it clear who is to be the leader and who to be the follower(s) and communicate well with each other to ensure the safety of the workers. ● After the teaching or programming operation, perform the check operation one step by one step and then shift to the automatic operation. ● When the check operation is to be performed inside the safety protection fence, perform the check operation using the previously specified work procedure like the teaching operation. ● Make sure to perform the programmed operation check at the safety speed. Failure to do so may result in an accident due to unexpected motion caused by a program error, etc. ● Do not touch the terminal block or any of the various setting switches in the power ON mode. Failure to do so may result in an electric shock or malfunction.
7	Automatic Operation	● Check before starting the automatic operation or rebooting after operation stop that there is nobody in the safety protection fence. ● Before starting automatic operation, make sure that all peripheral equipment is in an automatic-operation-ready state and there is no alarm indication. ● Make sure to operate automatic operation start from outside of the safety protection fence. ● In the case that there is any abnormal heating, smoke, offensive smell, or abnormal noise in the product, immediately stop the machine and turn OFF the power switch. Failure to do so may result in a fire or damage to the product. ● When a power failure occurs, turn OFF the power switch. Failure to do so may cause an injury or damage to the product, due to a sudden motion of the product in the recovery operation from the power failure.

No.		Description
8	Maintenance and Inspection	● When the work is carried out with 2 or more persons, make it clear who is to be the leader and who to be the follower(s) and communicate well with each other to ensure the safety of the workers. ● Perform the work out of the safety protection fence, if possible. In the case that the operation is to be performed unavoidably inside the safety protection fence, prepare the “Stipulations for the Operation” and make sure that all the workers acknowledge and understand them well. ● When the work is to be performed inside the safety protection fence, basically turn OFF the power switch. ● When the operation is to be performed inside the safety protection fence, the worker should have an emergency stop switch at hand with him so that the unit can be stopped any time in an emergency. ● When the operation is to be performed inside the safety protection fence, in addition to the workers, arrange a watchman so that the machine can be stopped any time in an emergency. Also, keep watch on the operation so that any third person can not operate the switches carelessly. ● Place a sign “Under Operation” at the position easy to see. ● For the grease for the guide or ball screw, use appropriate grease according to the instruction manual for each model. ● Do not perform the dielectric strength test. Failure to do so may result in a damage to the product. ● When releasing the brake on a vertically oriented actuator, exercise precaution not to pinch your hand or damage the work parts with the actuator dropped by gravity. ● The slider or rod may get misaligned OFF the stop position if the servo is turned OFF. Be careful not to get injured or damaged due to an unnecessary operation. ● Pay attention not to lose the cover or untightened screws, and make sure to put the product back to the original condition after maintenance and inspection works. Use in incomplete condition may cause damage to the product or an injury. * Safety protection Fence : In the case that there is no safety protection fence, the movable range should be indicated.
9	Modification and Dismantle	● Do not modify, disassemble, assemble or use of maintenance parts not specified based at your own discretion.
10	Disposal	● When the product becomes no longer usable or necessary, dispose of it properly as an industrial waste. ● When removing the actuator for disposal, pay attention to drop of components when detaching screws. ● Do not put the product in a fire when disposing of it. The product may burst or generate toxic gases.
11	Other	● Do not come close to the product or the harnesses if you are a person who requires a support of medical devices such as a pacemaker. Doing so may affect the performance of your medical device. ● See Overseas Specifications Compliance Manual to check whether complies if necessary. ● For the handling of actuators and controllers, follow the dedicated instruction manual of each unit to ensure the safety.

Alert Indication

The safety precautions are divided into “Danger”, “Warning”, “Caution” and “Notice” according to the warning level, as follows, and described in the instruction manual for each model.

Level	Degree of Danger and Damage	Symbol
Danger	This indicates an imminently hazardous situation which, if the product is not handled correctly, will result in death or serious injury.	Danger
Warning	This indicates a potentially hazardous situation which, if the product is not handled correctly, could result in death or serious injury.	Warning
Caution	This indicates a potentially hazardous situation which, if the product is not handled correctly, may result in minor injury or property damage.	Caution
Notice	This indicates lower possibility for the injury, but should be kept to use this product properly.	Notice

Caution in Handling

1. Make sure to follow the usage condition, environment and specification range of the product.
   In case it is not secured, it may cause a drop in performance or malfunction of the product.

2. Do not conduct any treatment or operation that is not stated in this instruction manual.

3. It is recommended to apply our products for the wiring between the actuator and the controller.

4. Do not attempt to establish the settings for the speed and acceleration/deceleration above the maximum specification.
   An operation with speed and acceleration/deceleration beyond the allowable range may cause an abnormal noise, vibration, malfunction or shortened life.
   In the case of interpolated operation of combined axes, the speed and acceleration/deceleration settings should correspond to the minimum values among all combined axes.

5. Set the allowable moment within the allowable range.
   If the robot is operated under a load equal to or greater than the allowable moment, abnormal noise or vibration, failure, or shorter life may result.
   If it is extreme, flaking may occur on the guide.

6. Avoid contamination from getting into the moving part of the fingers.
   Contamination may get pinched and may cause malfunction.

7. When the work piece removal is required at the power OFF, do not attempt to pull off the work piece forcefully to remove it.
   Remove the work piece either by twisting the open/close screw or detaching one side of the finger attachment. Pulling off the work piece forcefully may cause damage to the product.
   [Refer to 4.2, “Release of the Gripped Work Piece”]

8. Remove the gripped work piece when the device would not be used for long time.
   Leaving the product with a work piece being held for a long term may drop the performance or give a bad impact to the guide.

9. Make sure to attach the actuator properly by following this instruction manual.
   Using the product with the actuator not being certainly retained or affixed may cause abnormal noise, vibration, malfunction or shorten the product life.

International Standards Compliances

This actuator complies with the following overseas standard.
Refer to Overseas Standard Compliance Manual (ME0287) for more detailed information.

RoHS3 Directive	CE Marking
○	○

Name of the Parts

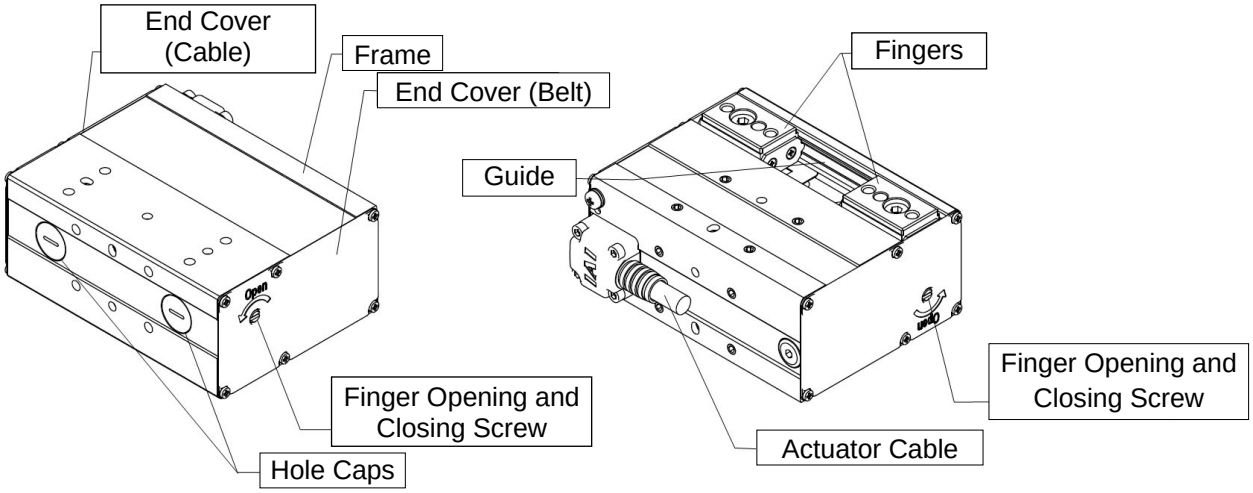

1. Specifications Check

1.1 Checking the Product

The standard configuration of this product is comprised of the following parts.
See the component list for the details of the enclosed components. If you find any fault or missing parts, contact your local IAI distributor.

1.1.1 Parts

No.	Name	Model number	Quantity	Remarks
1	Actuator	Refer to “How to Read the Model Nameplate” and “How to Read the Model Number.”	1	
Accessories				
2	Motor • Encoder Cables (Note1)		1	
3	Safety Guide		1	

Note1 The motor • encoder cables differ between the standard model and robot cable.
[Refer to 1.5, “Motor • Encoder Cables.”]

1.1.2 Instruction Manuals for the Controllers Related to this Product

No.	Name	Control No.
1	Instruction Manual for PCON-CB/CGB Controller	ME0342
2	Instruction Manual for PCON-CYB/PLB/POB Controller	ME0353
3	Instruction Manual for MCON Controller	ME0341
4	Instruction Manual for MSEP Controller	ME0299
5	Instruction Manual for MSEL-PC/PG Controller	ME0336
6	Instruction Manual for RCON System	ME0384
7	Instruction Manual for RSEL System	ME0392
8	Instruction Manual for RC PC Software RCM-101-MW/RCM-101-USB	ME0155
9	Instruction Manual for XSEL PC Software IA-101-X-MW/IA-101-X-USBMW	ME0154
10	Instruction Manual for Touch Panel Teaching Pendant CON-PTA/PDA/PGA	ME0295
11	Instruction Manual for Touch Panel Teaching Pendant TB-01/01D/01DR Applicable for Position Controller	ME0324
12	Instruction Manual for Touch Panel Teaching Pendant TB-02/02D Applicable for Position Controller	ME0355
13	Instruction Manual for Touch Panel Teaching Pendant TB-01/01D/01DR Applicable for Program Controller	ME0325
14	Instruction Manual for Touch Panel Teaching Pendant TB-02/02D Applicable for Program Controller	ME0356

1.1.3 How to Read the Model Nameplate

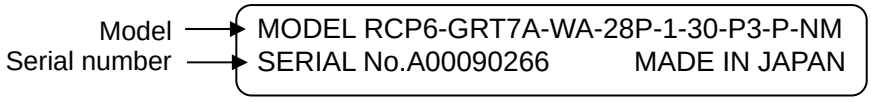

1.1.4 How to Read the Model Number

RCP6 - GRT7A - WA - 28P - 1 - 30 - P3 - P- NM - **

Identification for IAI use only (Note1)

Series

<Type>
Slide Type
GRT7A
GRT7B

<Encoder Type>
WA : Battery-less absolute

<Motor Type>
28P : 28□ size

<Gear Ratio Pattern>
GRT7A
1 : Feed screw lead length 1.5mm
Pulley deceleration ratio 1.5
GRT7B
1 : Feed screw lead length 2mm
Pulley deceleration ratio 1.25
2 : Feed screw lead length 2mm
Pulley deceleration ratio 2.5

<Stroke>
[Refer to 1.2 “Specifications”]

<Options>
AC1 : Actuator cable 1m specification
AC2 : Actuator cable 2m specification
AC3 : Actuator cable 3m specification
NM : Reversed-home specification
CJTB : Rear cable ejection to top side
CJLB : Rear cable ejection to left side
CJRB : Rear cable ejection to right side
CJBB : Rear cable ejection to bottom side
CJTS : Side cable ejection to top side
CJLS : Side cable ejection to left side
CJRS : Side cable ejection to right side
CJBS : Side cable ejection to bottom side

<Cable Length>
N : None
P : 1m
S : 3m
M : 5m
X□□ : Length specification
R□□ : Robot cable

<Controller>
P3 : PCON-CB/CGB
PCON-CYB/PLB/POB
MCON-C/CG/LC/LCG
MSEL-PC/PG
P5 : RCON
RSEL

Note 1 Identification for IAI use only: It may be displayed for IAI use. It is not a code to show the model type.

1.2 Specifications

1.2.1 Common

[1] Slide Type

Model	GRT7A	GRT7B	
Gear Ratio Pattern	1	1	2
Motor Type	28P	28P	28P
Deceleration Ratio	Pulley deceleration ratio 20 : 30 Screw lead 1.5	Pulley deceleration ratio 24 : 30 Screw lead 2	Pulley deceleration ratio 12 : 30 Screw lead 2
Open/Close Stroke [mm]	30 (One side 15)	40 (One side 20)	40 (One side 20)
		80 (One side 40)	80 (One side 40)
Max. Grip Force [N]	120 (One side 60)	150 (One side 75)	300 (One side 150)
Max. Open/Close Speed [mm/s] (Note 1)	75 (One side)	120 (One side)	60 (One side)
Maximum Acceleration [G]	0.3	0.3	0.3
Positioning repeatability [mm]	±0.01	±0.01	±0.01
Home-Return Accuracy [mm]	0.1 or less	0.1 or less	0.1 or less
Backlash of Finger on One Side [mm]	0.2 or less	0.2 or less	0.2 or less
Lost Motion [mm]	0.2 or less	0.2 or less	0.2 or less
No. of Encoder Pulses	8192	8192	8192
Finger Driving System	Timing belt + Trapezoid thread on right and left	Timing belt + Trapezoid thread on right and left	Timing belt + Trapezoid thread on right and left
Finger Guiding Structure	Limited guide	Limited guide	Limited guide
Pollution Degree (Applicable Standard: IEC 60664-1)	Class 3	Class 3	Class 3

Note1 The maximum speed may not be reached depending on the operational stroke and the acceleration/deceleration setting.

1.2.2 Relation between the Current Limit Value and the Grip Force

[GRT7A]

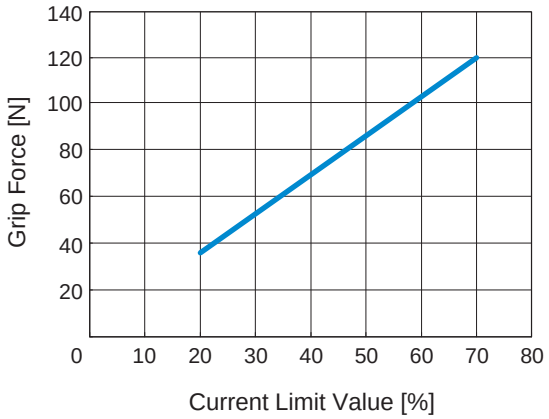

[GRT7B Gear Ratio Pattern: 1]

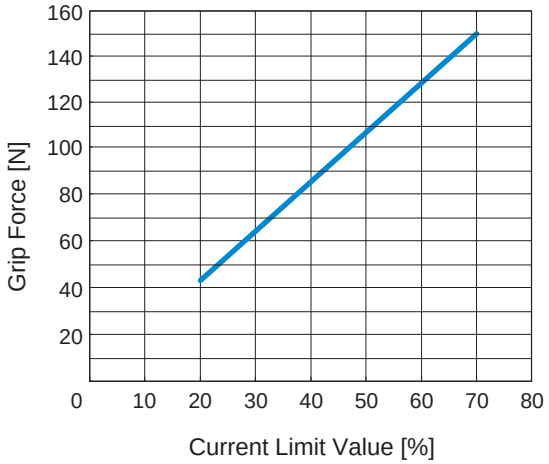

[GRT7B Gear Ratio Pattern: 2]

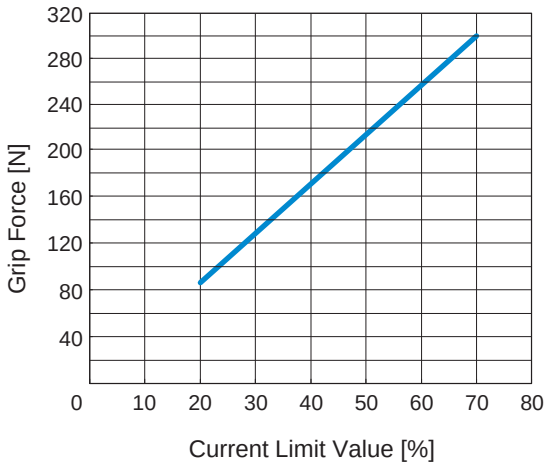

⚠ Caution: (1) It is a reference when assuming the speed is 5mm/s.

(2) The grip force is the values under the conditions stated below.
Total value of grip force of both slides at the top surface of the slides (gripping point = 0mm, overhang = 0mm)

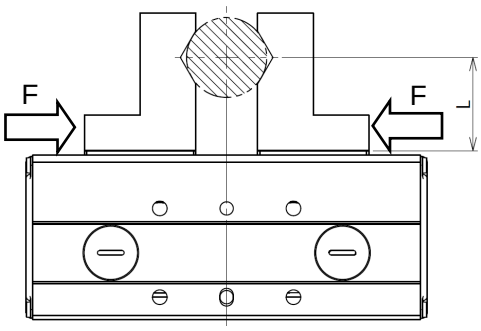

(3) There is a little variance in the actual grip force. The variance of the grip force becomes large when the current limit value is low.

(4) Use the product within the range in the graph for the current limit value. Pressing force will not be stable if used below 20%. There is even a case that it would not operate. The product cannot be used above 70%. Doing so may cause degradation in the motor coil insulation by heat radiation, which results in shortening the product life.

(5) For the CON system controllers such as PCON, when the approach speed (setting in the position table) to the pressing start position is 5mm/s or less, pressing is performed at the approach speed. In such a case also the pressing force will be unstable. In such cases, check in advance that the actuator can be used with no problem before omit using.
For the SEL system controllers such as MSEL, pressing operation is performed at the speed set in PAPR Command regardless of the approach speed to the pressing start position.

1.2.3 Duty in Continuous Operation

Continuous operation is available with the duty 100%.
Duty is the rate of operation expressed in % that represents the time of the actuator being operated in 1 cycle of operation.

[Duty Ratio]

Duty ratio is the rate of operation expressed in % that presents the time of the actuator being operated in 1 cycle of operation.

$$D = \frac{T_M}{T_M + T_R} \times 100\ (\%)$$

D : Duty
T_M : Operation Time (including the pressing operation)
T_R : Stop Duration

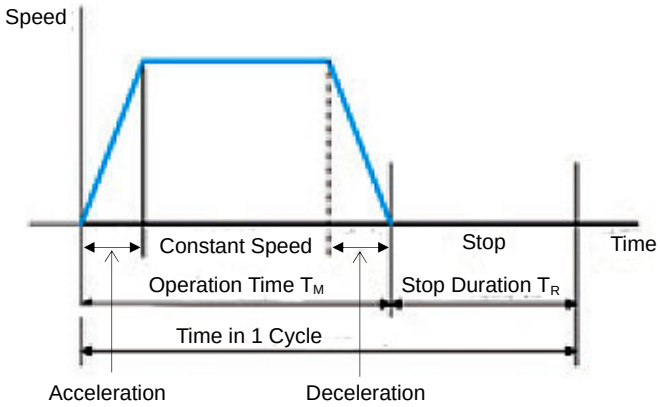

1.3 Operating Conditions

1.3.1 Grip Force

It is necessary to satisfy the conditions stated below to use the product. Conduct the following calculation to make sure it is satisfied.

Procedure 1: Check for the necessary grip force and transportable work piece mass
↓
Procedure 2: Check for the vertical allowable load of the fingers and allowable moment

Procedure 1: Check for the necessary grip force and transportable work piece mass
If a work piece is to be gripped on the fingers with the friction force created by the grip force, the formula to calculate the necessary grip force is as follows;

(1) In case of ordinary transportation

F : Grip Force [N] …… Sum of pressing force on each finger
μ : Coefficient of static friction between finger attachment and work piece
m : Mass of work piece [kg]
g : Gravitational acceleration [= 9.8m/s^2]

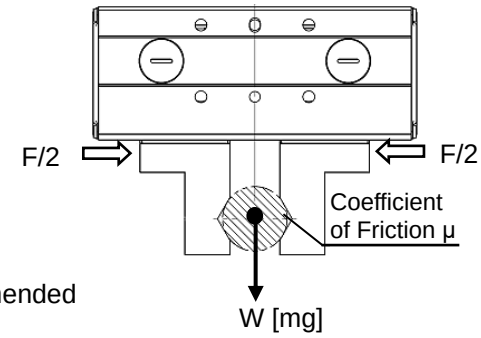

The condition to grip the work piece statically and that the work piece would not drop is;

$F\mu > W$

$$F > \frac{mg}{\mu}$$

The necessary grip force assuming the safety factor recommended for ordinary transportation is 2 should be;

$$F > \frac{mg}{\mu} \times 2 \text{ (safety factor)}$$

When coefficient of friction is μ0.1 to 0.2;

$$F > \frac{mg}{0.1 \text{ to } 0.2} \times 2 = (10 \text{ to } 20) \times mg$$

* The mass of a transportable work piece will get higher as the coefficient of static friction is higher. However it is necessary to that enables it to obtain a grip force of 10 to 20 times or more to ensure the safety.

For ordinary work piece transportation; Necessary grip force ⇒ 10 to 20 times or more of work piece mass Transportable work piece mass ⇒ 1/10 to 1/20 or less of grip force

(2) In case of high acceleration/deceleration speed or a big impact is applied to the work piece during transportation

High inertial force, in addition to the gravity, will be applied to the work piece. In such cases, consider an even higher safety factor if it is necessary.

When high acceleration/deceleration speed or a big impact is applied; Necessary grip force ⇒ 30 to 50 times or more of the work piece mass Transportable work piece mass ⇒ 1/30 to 1/50 or less of the grip force

Procedure 2: Check for the vertical allowable load of the fingers and allowable moment
Check the vertical load and the moment applicable to the finger. Calculate Fz, Ma, Mb and Mc by referring to (1) to (3) described below, and select a model considering not to exceed the allowable value. Or, consider to make the overhang smaller at the gripping point or reduce the grip force so it would not exceed the allowable value.

Load and the moment applicable to the finger

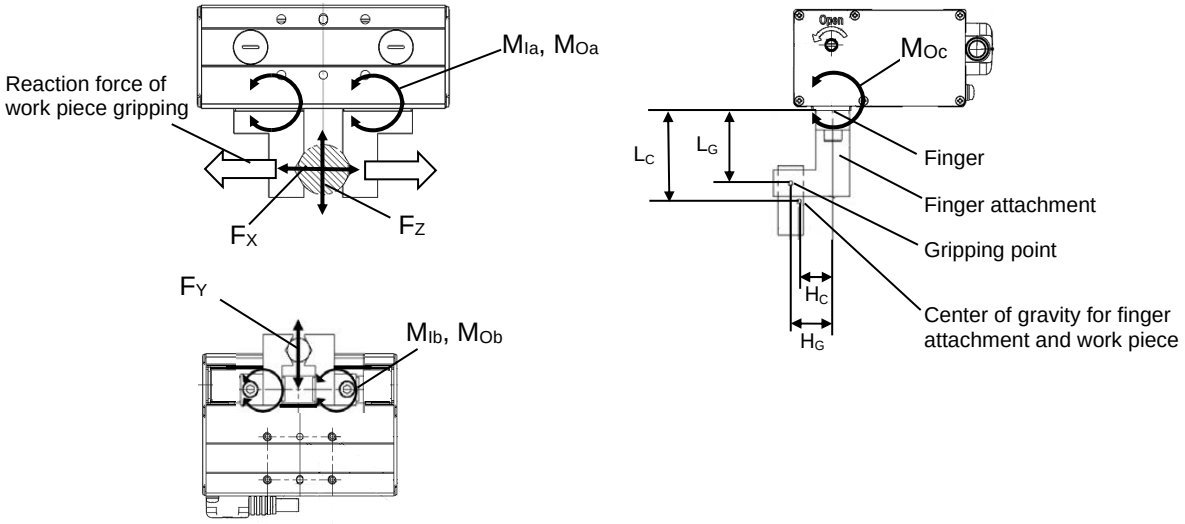

F_X : External force in X direction applied to work piece and finger [N]
F_Y : External force in Y direction applied to work piece and finger [N]
F_Z : External force in Z direction applied to work piece and finger [N]
L_G : Distance from finger attachment surface to gripping point [mm] (Note 1)
H_G : Distance from center of fingers to gripping point (Overhang) [mm] (Note 1)
L_C : Distance from finger attachment surface to center of gravity for work piece and finger attachment [mm]
H_C : Distance from center of fingers to center of gravity for work piece and finger attachment [mm]

M_{Ia} : Moment in Ma direction generated on fingers due to grip force [N•m]
M_{Ib} : Moment in Mb direction generated on fingers due to grip force [N•m]
M_{Oa} : Moment in Ma direction generated on fingers due to external force [N•m]
M_{Ob} : Moment in Mb direction generated on fingers due to external force [N•m]
M_{Oc} : Moment in Mc direction generated on fingers due to external force [N•m]
Ma : All moments in Ma direction generated on fingers [N•m]
Mb : All moments in Mb direction generated on fingers [N•m]
Mc : All moments in Mc direction generated on fingers [N•m]

Note1 For L_G and H_G, have the values below as the upper limit. Exceeding the allowable range may generate an excessive moment on the finger sliding mechanism, which may be a cause of a bad impact to the product life.

Figure 2: Upper Limit for Gripping Point L_G and Overhang H_G

[GRT7A]

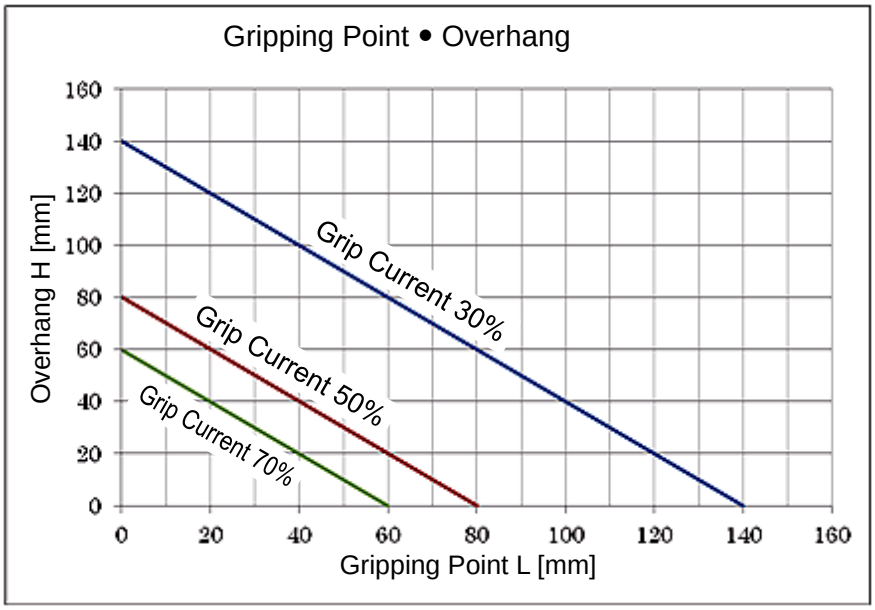

[GRT7B Gear Ratio Pattern: 1]

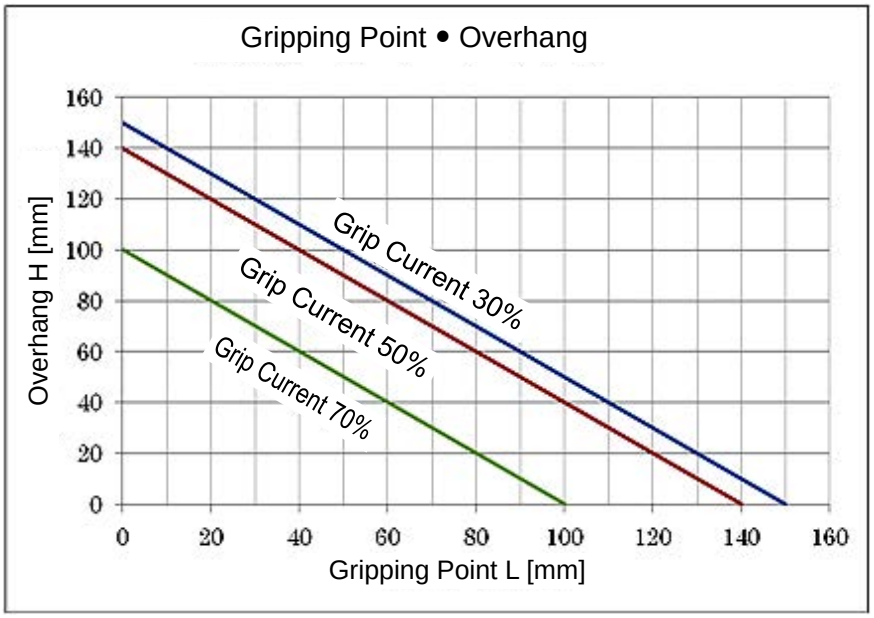

[GRT7B Gear Ratio Pattern: 2]

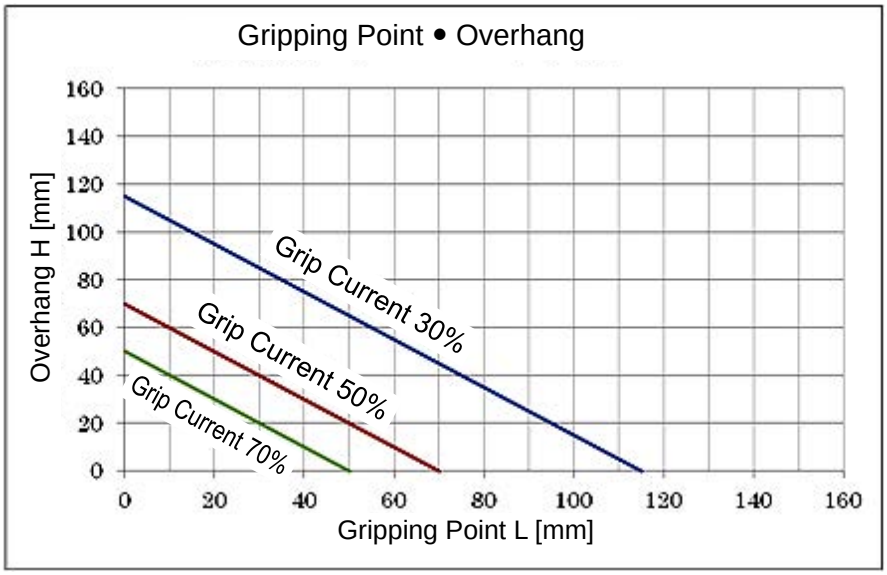

Table 1: Allowable Load and Allowable Moment on the Fingers (Note 1)

Model	Allowable Load in Vertical [N] F_{Zmax}	Max. Allowable Moment [N•m] (Note 2)		
		M_{amax}	M_{bmax}	M_{cmax}
GRT7A	598	3.6	3.6	10.2
GRT7B Gear Ratio Pattern: 1	898	7.5	7.5	15.3
GRT7B Gear Ratio Pattern: 2	898	7.5	7.5	15.3

Note 1 The graphs show the values for allowable load and allowable moment in static on one finger.
Note 2 The values for the allowable moment are those when the load is applied in one direction only. The values become one half when the load is applied from in two directions.

(1) Moment generated on fingers due to grip force

1) Moment in Ma direction [M_{Ia}]

$$M_{Ia} = L_G \frac{1.5F_G}{2} \times 10^{-3}$$

F_G: Grip force of gripper [N]

2) Moment in Mb direction [M_{Ib}]

$$M_{Ib} = H_G \frac{1.5F_G}{2} \times 10^{-3}$$

F_G: Grip force of gripper [N]

Refer to “1.2.2 Relation between the Current Limit Value and the Grip Force” for grip force F_G. As the grip force is a reference value, it is multiplied by 1.5 for the safety margin in the moment calculation.

(2) Moment generated on the fingers due to an external force
External force as well as grip force will be applied to the work piece and the finger attachment in the movements such as moving straight or turning in the condition of the gripper being attached on a Cartesian Robot, Articulated Robot or other actuators.
Have the following calculation.

♦ External force applied on the work piece and finger attachment [F_X, F_Y, F_Z]
Figure out the following types of external forces in three directions, X, Y and Z, applied on the work piece and finger attachment considering the condition of the gripper use, and sum up all the values to determine F_X, F_Y and F_Z.

a) Weight of the work piece and finger attachment
$F = mg$ m : mass of the work piece and finger attachment [kg],
g : gravitational acceleration [= 9.8m/s^2]

b) Inertial force in the gripper moving straight
$F = ma$ a : Acceleration/deceleration during transportation [m/s^2]

c) Centrifugal force in gripper turning
$F = mr\omega^2$ r : Radius of turning [m], ω : Angular velocity [deg/s]

Confirm that F_z is below the allowable load vertical direction, F_{zmax} in Table 1.

♦ Moment generated on the fingers due to an external force
Figure out the moment in each direction due to external forces F_X, F_Y and F_Z calculated above.

1) Moment in Ma direction [M_{oa}] $M_{oa} = LcF_X \times 10^{-3}$
2) Moment in Mb direction [M_{ob}] $M_{ob} = HcF_X \times 10^{-3}$
3) Moment in Mc direction [M_{oc}] $M_{oc} = LcF_Y \times 10^{-3} + HcF_Z \times 10^{-3}$

(3) All moments in each direction generated to the fingers
$Ma = M_{Ia} + M_{oa}$, $Mb = M_{Ib} + M_{ob}$, $Mc = M_{oc}$

Confirm that the value figured out in the calculation above is below the allowable moment stated in Table 1.

(Note) Attempt to have the finger attachment minimized in size and weight even if it is in the allowable range. If the fingers are long and big in size and heavy in mass, the moment caused by an impact at gripping may cause a performance drop or give a bad impact to the guide area.

1.4 Option

1.4.1 Reversed-home Specification (Model: NM)

The standard home position is on the open side. It is on the closed side if the home direction is set the opposite.

(Note) The home position is adjusted at the factory before shipment. If you wish to change the home after the delivery of your actuator, you must return the actuator to IAI for adjustment.

1.4.2 Changing Actuator Cable Length (Model: AC1, AC2, AC3)

It is 200mm in standard. If it is necessary to have a longer actuator cable, you can indicate the length from the following variations.

- AC1: 1m
- AC2: 2m
- AC3: 3m

1.4.3 Changing Direction of Ejection for Rear Cable Ejection (Model: CJTB, CJLB, CJRB, CJBB)

The cable is to be ejected on the back. Also, the direction of ejection can be as indicated.
The direction of ejection can be chosen from top (Model: CJTB), left (Model: CJLB), right (Model: CJRB) and bottom (Model: CJBB).

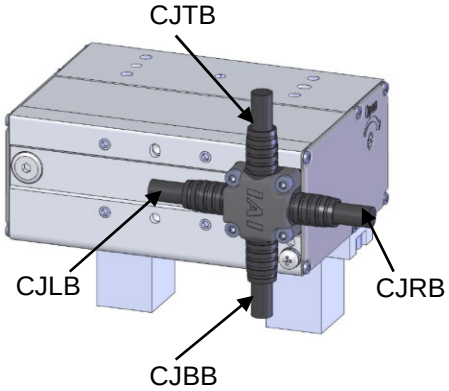

1.4.4 Changing Direction of Ejection for Side Cable Ejection (Model: CJTS, CJLS, CJRS, CJBS)

The cable is to be ejected on the side. Also, the direction of ejection can be as indicated.
The direction of ejection can be chosen from top (Model: CJTS), left (Model: CJLS), right (Model: CJRS) and bottom (Model: CJBS).

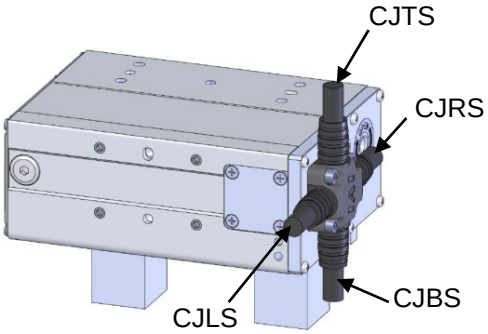

1.5 Motor • Encoder Cables

1.5.1 Connection Cable Dedicated for Models Except for RCON and RSEL

(1) Motor • Encoder Integrated Cables
CB-CAN-MPA□□□ (□□□ indicates the cable length L Example: 020 = 2m), up to 20m
(Note) 19m max. for Option AC1, 18m max. for AC2 and 17m max. for AC3.

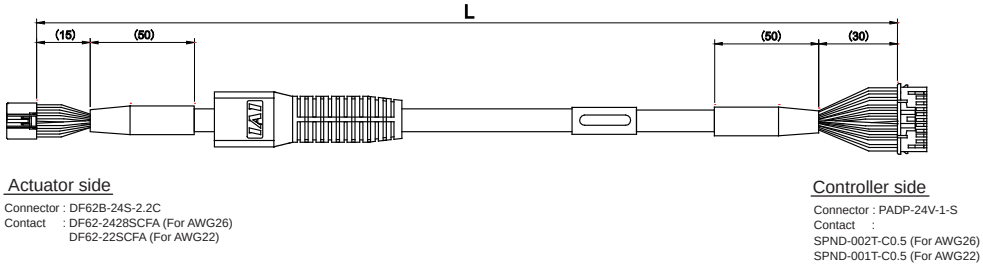

Connection diagram

Actuator side

Thickness	Electric Wire Color	Symbol	Pin No.
AWG22/19	Blue	ϕA	3
AWG22/19	Orange	VMM	5
AWG22/19	Brown	ϕB	10
AWG22/19	Gray	VMM	9
AWG22/19	Green	ϕ_A	4
AWG22/19	Red	ϕ_B	15
AWG26	Light Blue	SA	12
AWG26	Orange	SB	17
AWG26	Green	A+	1
AWG26	Brown	A-	6
AWG26	Gray	B+	11
AWG26	Red	B-	16
AWG26	Black	VPS	18
AWG26	Yellow	LS+	8
AWG26	Light Blue	BK+	20
AWG26	Orange	BK-	2
AWG26	Gray	VCC	21
AWG26	Red	GND	7
AWG26	Brown	LS-	14
AWG26	Green	LS_GND	13
-	-	-	19
AWG26	Pink	-	22
-	-	-	23
AWG26	Black	FG	24

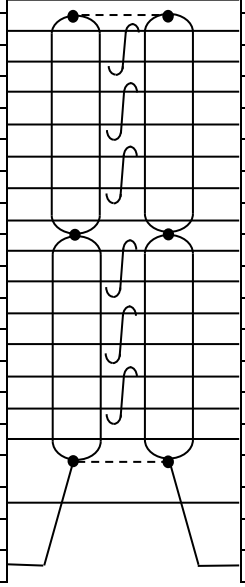

Controller side

Pin No.	Symbol	Electric Wire Color	Thickness
1	ϕA	Blue	AWG22/19
2	VMM	Orange	AWG22/19
3	ϕB	Brown	AWG22/19
4	VMM	Gray	AWG22/19
5	ϕ_A	Green	AWG22/19
6	ϕ_B	Red	AWG22/19
11	SA	Light Blue	AWG26
12	SB	Orange	AWG26
13	A+	Green	AWG26
14	A-	Brown	AWG26
15	B+	Gray	AWG26
16	B-	Red	AWG26
18	VPS	Black	AWG26
7	LS+	Yellow	AWG26
9	BK+	Light Blue	AWG26
10	BK-	Orange	AWG26
17	VCC	Gray	AWG26
19	GND	Red	AWG26
8	LS-	Brown	AWG26
20	LS_GND	Green	AWG26
22	-	-	-
21	-	Pink	AWG26
23	-	-	-
24	FG	Black	AWG26

(Note) About thickness AWG22/19
The thickness is AWG22 when the cable length is 5m or less, and AWG19 when longer than 5m.

(2) Motor • Encoder Integrated Cables Robot Type
CB-CAN-MPA□□□-RB (□□□ indicates the cable length L Example: 020 = 2m), up to 20m
(Note) 19m max. for Option AC1, 18m max. for AC2 and 17m max. for AC3.

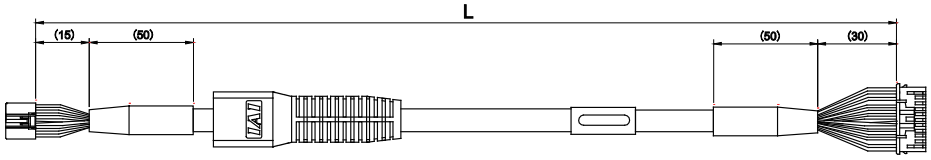

Actuator side
Connector : DF62B-24S-2.2C
Contact : DF62-2428SCFA (For AWG26)
DF62-22SCFA (For AWG22)

Controller side
Connector : PADP-24V-1-S
Contact :
SPND-002T-C0.5 (For AWG26)
SPND-001T-C0.5 (For AWG22)

Connection diagram

Actuator side

Thickness	Electric Wire Color	Symbol	Pin No.
AWG22/19	Blue	ϕA	3
AWG22/19	Orange	VMM	5
AWG22/19	Brown	ϕB	10
AWG22/19	Gray	VMM	9
AWG22/19	Green	ϕ_A	4
AWG22/19	Red	ϕ_B	15
AWG26	Black	LS+	8
AWG26	Yellow	LS-	14
AWG26	Blue	SA	12
AWG26	Orange	SB	17
AWG26	Green	A+	1
AWG26	Brown	A-	6
AWG26	Gray	B+	11
AWG26	Red	B-	16
AWG26	Blue	BK+	20
AWG26	Orange	BK-	2
AWG26	Gray	VCC	21
AWG26	Red	GND	7
AWG26	Brown	VPS	18
AWG26	Green	LS_GND	13
-	-	-	19
AWG26	Pink	-	22
-	-	-	23
AWG26	Green	FG	24

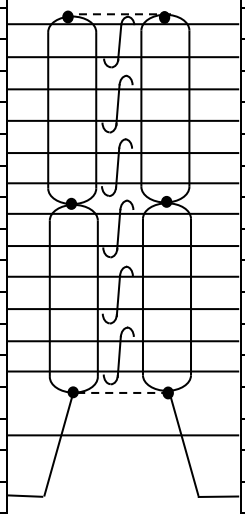

Controller side

Pin No.	Symbol	Electric Wire Color	Thickness
1	ϕA	Blue	AWG22/19
2	VMM	Orange	AWG22/19
3	ϕB	Brown	AWG22/19
4	VMM	Gray	AWG22/19
5	ϕ_A	Green	AWG22/19
6	ϕ_B	Red	AWG22/19
7	LS+	Black	AWG26
8	LS-	Yellow	AWG26
11	SA	Blue	AWG26
12	SB	Orange	AWG26
13	A+	Green	AWG26
14	A-	Brown	AWG26
15	B+	Gray	AWG26
16	B-	Red	AWG26
9	BK+	Blue	AWG26
10	BK-	Orange	AWG26
17	VCC	Gray	AWG26
19	GND	Red	AWG26
18	VPS	Brown	AWG26
20	LS_GND	Green	AWG26
22	-		-
21	-	Pink	AWG26
23	-		-
24	FG	Green	AWG26

(Note) About thickness AWG22/19
The thickness is AWG22 when the cable length is 5m or less, and AWG19 when longer than 5m.

1.5.2 Connection Cable Dedicated for RCON and RSEL

(1) Motor • Encoder Integrated Cables
CB-ADPC-MPA□□□ (□□□ indicates the cable length (L) Example: 030=3m), up to 20m

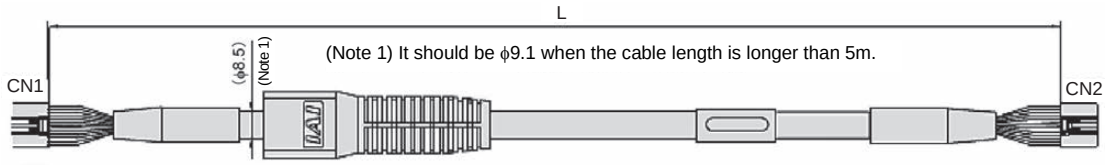

Actuator side

Connector: DF62B-24S-2.2C
Contact: DF62-2428SCFA (For AWG26)
DF62-22SCFA (For AWG22)

Controller side

Connector: DF62B-24S-2.2C
Contact:
DF62-2428SCFA (For AWG26)
DF62-22SCFA (For AWG22)

Connection diagram

Actuator side

Thickness	Electric Wire Color	Symbol	Pin No.
AWG22/19	Blue	ϕA	3
AWG22/19	Orange	VMM	5
AWG22/19	Brown	ϕB	10
AWG22/19	Gray	VMM	9
AWG22/19	Green	ϕ_A	4
AWG22/19	Red	ϕ_B	15
AWG26	Black	LS+	8
AWG26	Yellow	LS-	14
AWG26	Blue	SA	12
AWG26	Orange	SB	17
AWG26	Green	A+	1
AWG26	Brown	A-	6
AWG26	Gray	B+	11
AWG26	Red	B-	16
AWG26	Blue	BK+	20
AWG26	Orange	BK-	2
AWG26	Gray	VCC	21
AWG26	Red	GND	7
AWG26	Brown	VPS	18
AWG26	Green	LS_GND	13
-	-	-	19
AWG26	Pink	-	22
-	-	-	23
AWG26	Black	FG	24

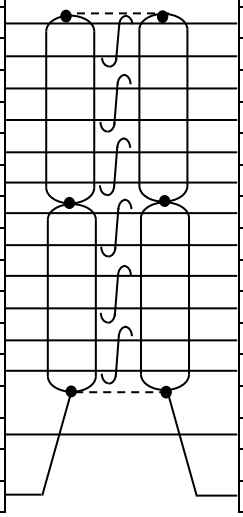

Controller side

Pin No.	Symbol	Electric Wire Color	Thickness
3	ϕA	Blue	AWG22/19
5	VMM	Orange	AWG22/19
10	ϕB	Brown	AWG22/19
9	VMM	Gray	AWG22/19
4	ϕ_A	Green	AWG22/19
15	ϕ_B	Red	AWG22/19
8	LS+	Black	AWG26
14	LS-	Yellow	AWG26
12	SA	Blue	AWG26
17	SB	Orange	AWG26
1	A+	Green	AWG26
6	A-	Brown	AWG26
11	B+	Gray	AWG26
16	B-	Red	AWG26
20	BK+	Blue	AWG26
2	BK-	Orange	AWG26
21	VCC	Gray	AWG26
7	GND	Red	AWG26
18	VPS	Brown	AWG26
13	LS_GND	Green	AWG26
19	-	-	-
22	-	Pink	AWG26
23	-	-	-
24	FG	Black	AWG26

(Note) About thickness AWG22/19
The thickness is AWG22 when the cable length is 5m or less, and AWG19 when longer than 5m.

(2) Motor • Encoder Integrated Cables Robot Type
CB-ADPC-MPA□□□-RB (□□□ indicates the cable length (L) Example: 030=3m), up to 20m

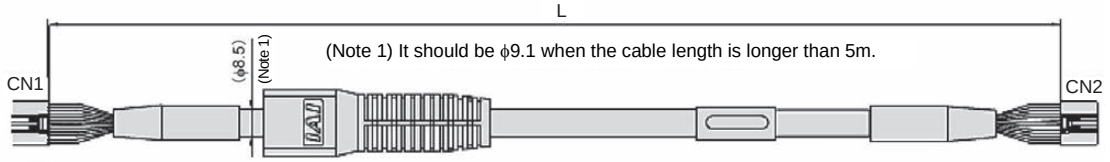

Actuator side

Connector: DF62B-24S-2.2C
Contact: DF62-2428SCFA (For AWG26)
DF62-22SCFA (For AWG22)

Controller side

Connector: DF62B-24S-2.2C
Contact:
DF62-2428SCFA (For AWG26)
DF62-22SCFA (For AWG22)

Connection diagram

Actuator side

Thickness	Electric Wire Color	Symbol	Pin No.
AWG22/19	Blue	ϕA	3
AWG22/19	Orange	VMM	5
AWG22/19	Brown	ϕB	10
AWG22/19	Gray	VMM	9
AWG22/19	Green	ϕ_A	4
AWG22/19	Red	ϕ_B	15
AWG26	Black	LS+	8
AWG26	Yellow	LS-	14
AWG26	Blue	SA	12
AWG26	Orange	SB	17
AWG26	Green	A+	1
AWG26	Brown	A-	6
AWG26	Gray	B+	11
AWG26	Red	B-	16
AWG26	Blue	BK+	20
AWG26	Orange	BK-	2
AWG26	Gray	VCC	21
AWG26	Red	GND	7
AWG26	Brown	VPS	18
AWG26	Green	LS_GND	13
-	-	-	19
AWG26	Pink	-	22
-	-	-	23
AWG26	Green	FG	24

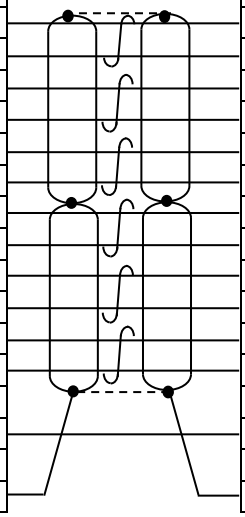

Controller side

Pin No.	Symbol	Electric Wire Color	Thickness
3	ϕA	Blue	AWG22/19
5	VMM	Orange	AWG22/19
10	ϕB	Brown	AWG22/19
9	VMM	Gray	AWG22/19
4	ϕ_A	Green	AWG22/19
15	ϕ_B	Red	AWG22/19
8	LS+	Black	AWG26
14	LS-	Yellow	AWG26
12	SA	Blue	AWG26
17	SB	Orange	AWG26
1	A+	Green	AWG26
6	A-	Brown	AWG26
11	B+	Gray	AWG26
16	B-	Red	AWG26
20	BK+	Blue	AWG26
2	BK-	Orange	AWG26
21	VCC	Gray	AWG26
7	GND	Red	AWG26
18	VPS	Brown	AWG26
13	LS_GND	Green	AWG26
19	-	-	-
22	-	Pink	AWG26
23	-	-	-
24	FG	Green	AWG26

(Note) About thickness AWG22/19
The thickness is AWG22 when the cable length is 5m or less, and AWG19 when longer than 5m.

2. Installation

2.1 Transportation

[1] Handling of the Actuator

Unless otherwise specified, the actuator is shipped with each axis unit packaged separately.

(1) Handling the Packed Unit

- Do not damage or drop. The package is not applied with any special treatment that enables it to resist an impact caused by a drop or crash.
- Transport a heavy package with at least more than two operators. Consider an appropriate method for transportation.
- Keep the unit in a horizontal orientation when placing it on the ground or transporting. Follow the instruction if there is any for the packaging condition.
- Do not step or sit on the package.
- Do not put any load that may cause a deformation or breakage of the package.

(2) Handling the Actuator after Unpacking

- Do not carry the actuator by its motor unit or its cable or attempt to move it by pulling the cable.
- Hold the frame or motor cover section of the body when transporting the actuator main body.
- Do not hit or drop the actuator during transportation.
- Do not attempt to force any part of the actuator. Do not apply excess force especially on the fingers and finger guide.

[2] Handling in the Assembled Condition

This is the case when the product is delivered from our factory under a condition that it is assembled with other actuators. The combined axes are delivered in a package that the frame is nailed on the lumber base.

(1) How to Handle the Package

- Do not hit or drop the package. No special treatment is conducted on this package to endure a drop or impact on it.
- Do not attempt to carry a heavy package with only one worker. Also, have an appropriate method for transportation.
- When hanging up with ropes, support on the reinforcement frame on the bottom of the lumber base. When bringing up the package with a forklift, also support on the bottom of the lumber base.
- Handle with care when putting the package down to avoid impact or bounce.
- Do not step on the package.
- Do not put anything on the package that could deform or damage it.

(2) How to Handle after Unpackaged

- Fix the finger so they would not accidently move during transportation.
- If the tip of an actuator is overhanging, have an appropriate way to fix it to avoid shake due to the external vibration. In the transportation without the tip being fixed, do not apply any impact with 0.3G or more.
- When hanging up with ropes, have appropriate cushioning to avoid any deformation of the actuator body. Also keep it in stable horizontal orientation. Make a fixture utilizing the attachment holes and the tapped holes on the actuator body if necessary.
- Do not attempt to apply load on the actuators or the connector box. Also pay attention not to pinch cables and bend or deform them forcefully.

[3] Handling in Condition of being assembled in Machinery Equipment (System)

These are some caution notes for when transporting the actuator being assembled in the machinery equipment (system):

- Fix the actuator so it would not move during transportation.
- If the tip of an actuator is overhanging, have an appropriate way to fix it to avoid shake due to the external vibration. In the transportation without the tip being fixed, do not apply any impact with 0.3G or more.
- When hanging up the machinery equipment (system) with ropes, do not attempt to apply load on the actuators or the connector box. Also pay attention not to pinch cables and bend or deform them forcefully.

2.2 Installation and Storage • Preservation Environment

[1] Installation Environment

The actuator should be installed in a location other than those specified below.
Also provide sufficient work space required for maintenance inspection.

- Where the actuator receives radiant heat from strong heat sources such as heat treatment furnaces
- Where the ambient temperature exceeds the range of 0 to 40°C
- Where the temperature changes rapidly and condensation occurs
- Where relative humidity smaller than 20% or larger than 85%RH
- Where the actuator receives direct sunlight
- Where the actuator is exposed to corrosive or combustible gases
- Where the ambient air contains a large amount of powder dust, salt or iron (at level exceeding what is normally expected in an assembly plant)
- Where the actuator is subject to splashed water, oil (including oil mist or cutting fluid) or chemical solutions
- Where the actuator receives impact or vibration
- Place with an altitude of 2,000m or more

When using the product in any of the locations specified below, provide a sufficient shield.

- Where noise generates due to static electricity, etc.
- Where the actuator is subject to a strong electric or magnetic field
- Where the actuator is subject to ultraviolet ray or radiation

[2] Storage • Preservation Environment

- The storage and preservation environment should comply with the same standards as those for the installation environment. In particular, when the machine is to be stored for a long time, pay close attention to environmental conditions so that no dew condensation forms.
- Unless specially specified, moisture absorbency protection is not included in the package when the machine is delivered. In the case that the machine is to be stored and preserved in an environment where dew condensation is anticipated, take the condensation preventive measures from outside of the entire package, or directly after opening the package.
- For storage and preservation temperature, the machine withstands temperatures up to 60°C for a short time, but in the case of the storage and preservation period of 1 month or more, control the temperature to 50°C or less.
- Storage and preservation should be performed in the horizontal condition. In the case it is stored in the packaged condition, follow the posture instruction if any displayed on the package.

2.3 How to Install

This chapter explains how to install the actuator on your mechanical system.

2.3.1 Installation

○: Possible ×: Not possible

Horizontal installation	Vertical installation	Sideways installation	Ceiling Mount installation
○	○	○	○

Installation Orientation

Horizontal installation	Vertical installation
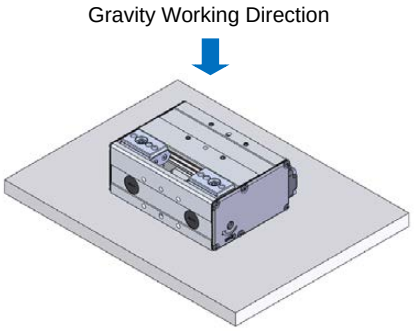	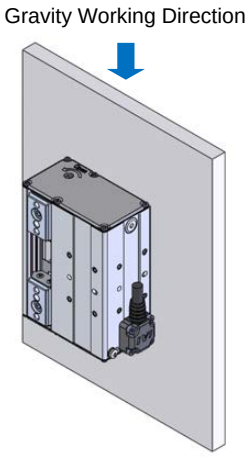
Sideways installation	**Ceiling Mount installation**
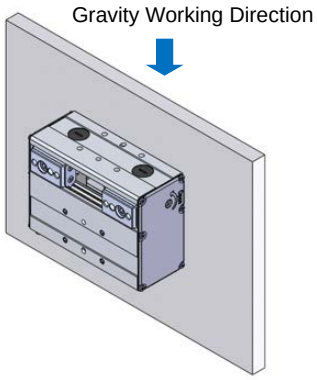	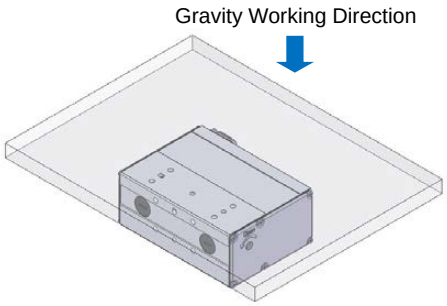

2.3.2 Installation of the Main Unit

Make sure that the surface to install the product is a well-finished machined surface or one that possesses an accuracy equivalent to it.
The unit is available for installation on four surfaces (four surfaces on the motor cover except the case of rear cable ejection in which three surfaces are available).

- Make sure to use all the tapped holes (4 places or 8 places) on the attachment surface for fixing. (Be aware that the tapping size is different for each model. Refer to the figures in the next page and after and 6. “External Dimensions.”)
  Screws or tapped holes may get damaged depending on the load applied to the body if not all the holes are used.
- There are a rounded hole and a slotted hole for positioning equipped on each attachment surface. Utilize these holes if necessary.

[1] GRT7A

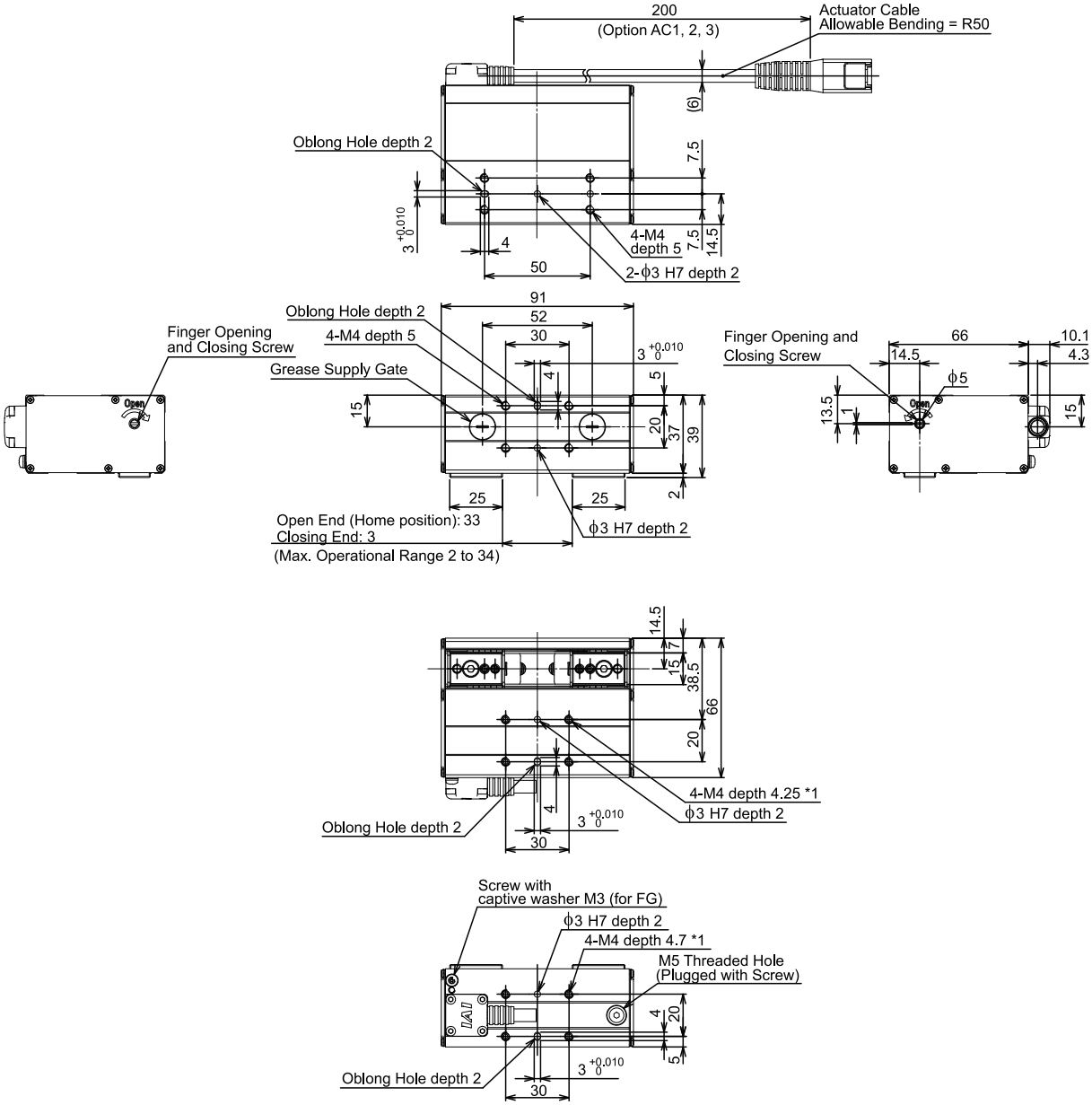

*1 To prevent contamination by foreign substances, it is equipped with a set screw.
When it is necessary to use this hole, remove the set screw.
(Make sure to use the removed screw to prevent foreign substances from getting in. Otherwise, it may cause damage to the internal mechanism or electrical parts.)

Nominal thread size	Tightening Torque	
	In the case that steel is used for the screw seating surface [N•m (kgf•m)]	In the case that aluminum is used for the screw seating surface [N•m (kgf•m)]
M4	3.59 (0.37)	1.76 (0.37)

About Tightening Screws

- Use a hex socket head cap screw for the attachment to the base.
- It is recommended to use high-tensile screws with ISO-10.9 or more.
- Make sure to have the effective length of screw engagement described below or more for the tightening of a screw and a female screw.
  When female screw is on steel → Thread length same as nominal diameter
  When female screw is on aluminum → Maximum depth of tapped hole

> ⚠ Caution: Pay special attention when selecting the screw length. In case that an inappropriate length of a screw is applied, it may cause damage on the tapped holes or insufficiency in attachment strength, which may result in a drop in the operation accuracy or an unexpected accident.

[2] GRT7B Stroke 40mm

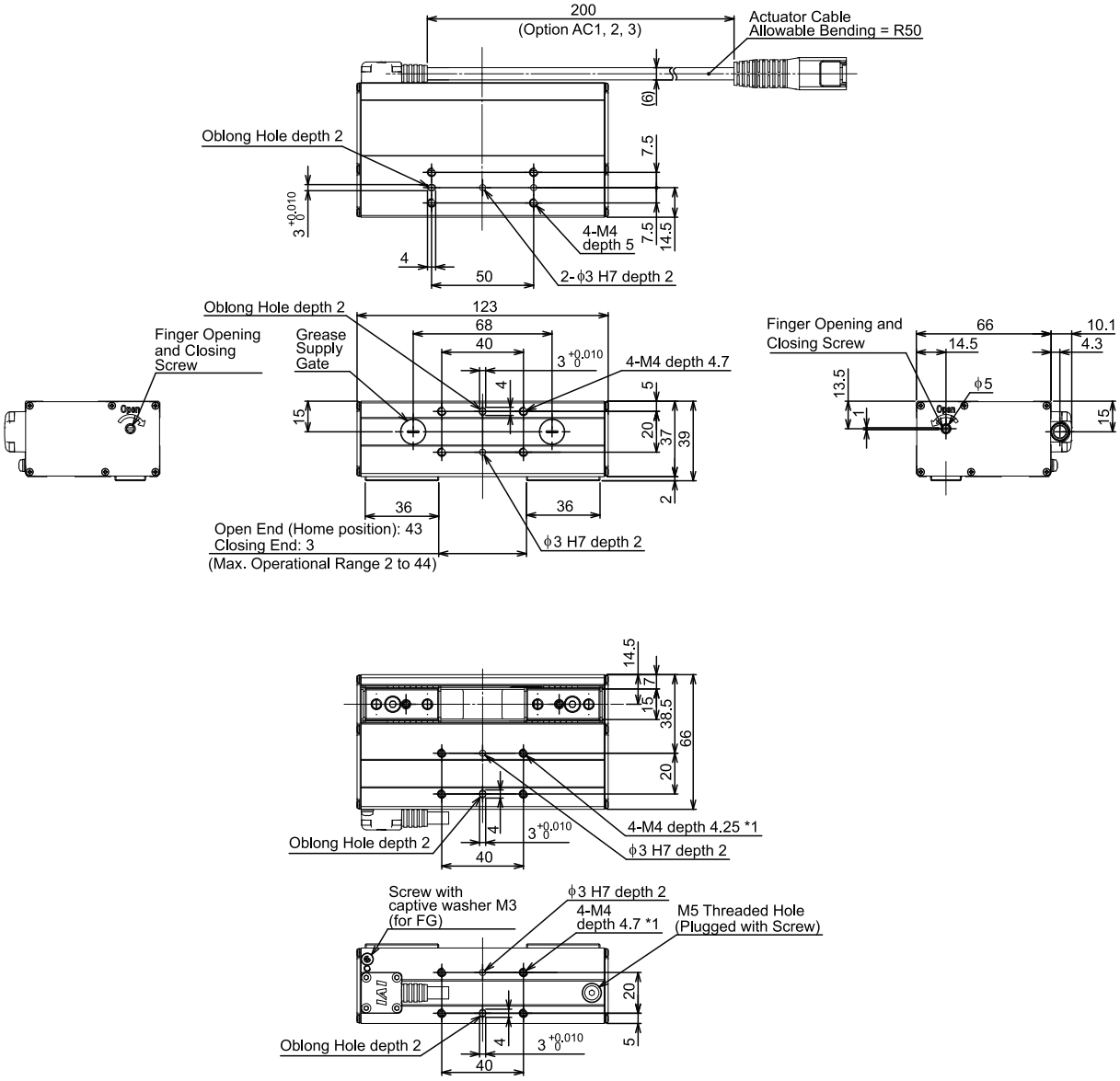

*1 To prevent contamination by foreign substances, it is equipped with a set screw.
When it is necessary to use this hole, remove the set screw.
(Make sure to use the removed screw to prevent foreign substances from getting in. Otherwise, it may cause damage to the internal mechanism or electrical parts.)

Nominal thread size	Tightening Torque	
	In the case that steel is used for the screw seating surface [N•m (kgf•m)]	In the case that aluminum is used for the screw seating surface [N•m (kgf•m)]
M4	3.59 (0.37)	1.76 (0.18)

About Tightening Screws

- Use a hex socket head cap screw for the attachment to the base.
- It is recommended to use high-tensile screws with ISO-10.9 or more.
- Make sure to have the effective length of screw engagement described below or more for the tightening of a screw and a female screw.
  When female screw is on steel → Thread length same as nominal diameter
  When female screw is on aluminum → Maximum depth of tapped hole

> ⚠ Caution: Pay special attention when selecting the screw length. In case that an inappropriate length of a screw is applied, it may cause damage on the tapped holes or insufficiency in attachment strength, which may result in a drop in the operation accuracy or an unexpected accident.

[3] GRT7B Stroke 80mm

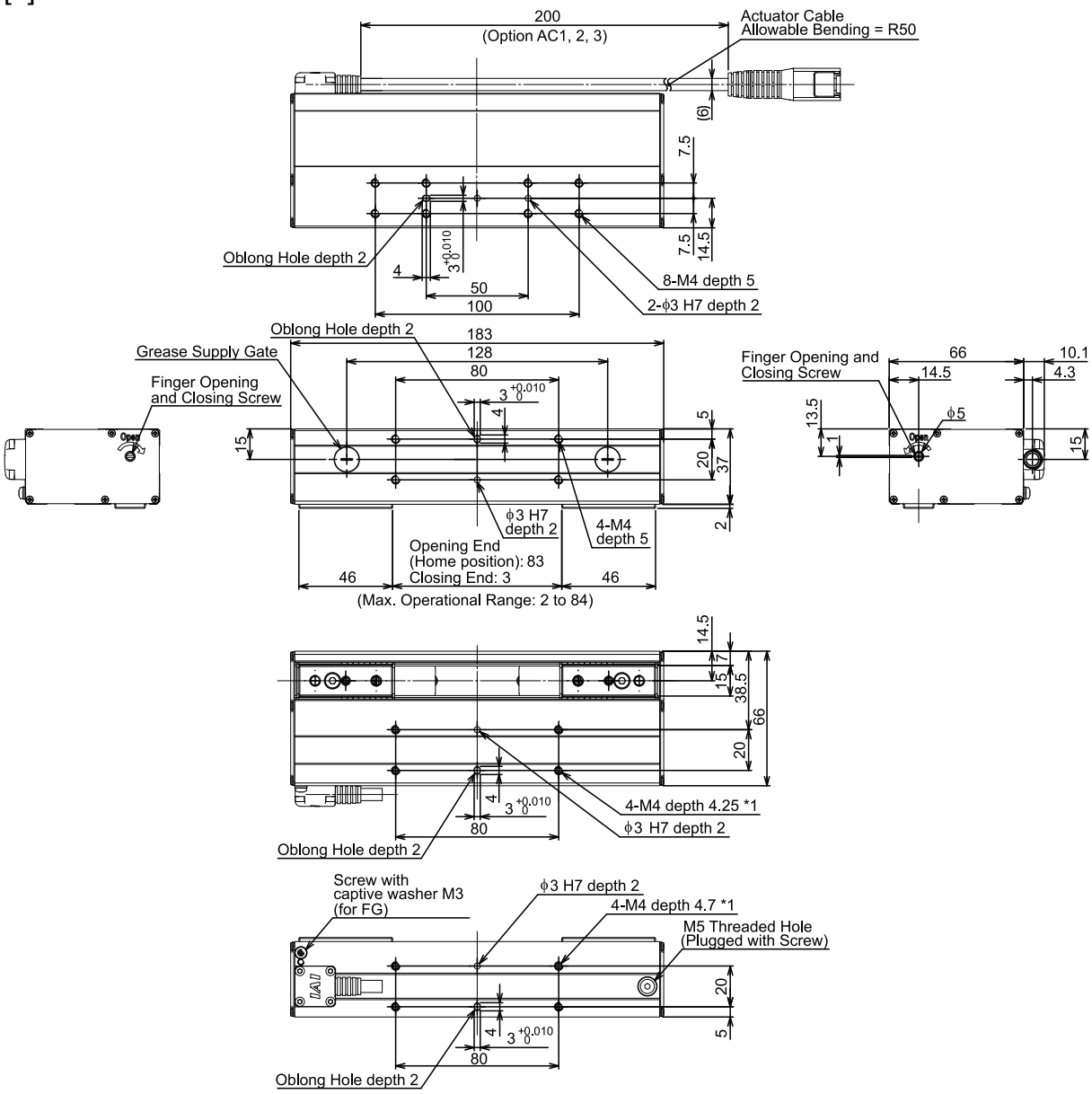

*1 To prevent contamination by foreign substances, it is equipped with a set screw.
When it is necessary to use this hole, remove the set screw.
(Make sure to use the removed screw to prevent foreign substances from getting in. Otherwise, it may cause damage to the internal mechanism or electrical parts.)

Nominal thread size	Tightening Torque	
	In the case that steel is used for the screw seating surface [N•m (kgf•m)]	In the case that aluminum is used for the screw seating surface [N•m (kgf•m)]
M4	3.59 (0.37)	1.76 (0.18)

About Tightening Screws

- Use a hex socket head cap screw for the attachment to the base.
- It is recommended to use high-tensile screws with ISO-10.9 or more.
- Make sure to have the effective length of screw engagement described below or more for the tightening of a screw and a female screw.
  When female screw is on steel → Thread length same as nominal diameter
  When female screw is on aluminum → Maximum depth of tapped hole

> ⚠ Caution: Pay special attention when selecting the screw length. In case that an inappropriate length of a screw is applied, it may cause damage on the tapped holes or insufficiency in attachment strength, which may result in a drop in the operation accuracy or an unexpected accident.

2.3.3 How to Attach the Finger Attachment

Please prepare the finger attachment separately.

[1] Positioning of the Finger Attachment

For improvement of the accuracy and the repeatability of the attachment, it is recommended to position by attaching at two points, the positioning pin and the outside of the finger, as shown below.

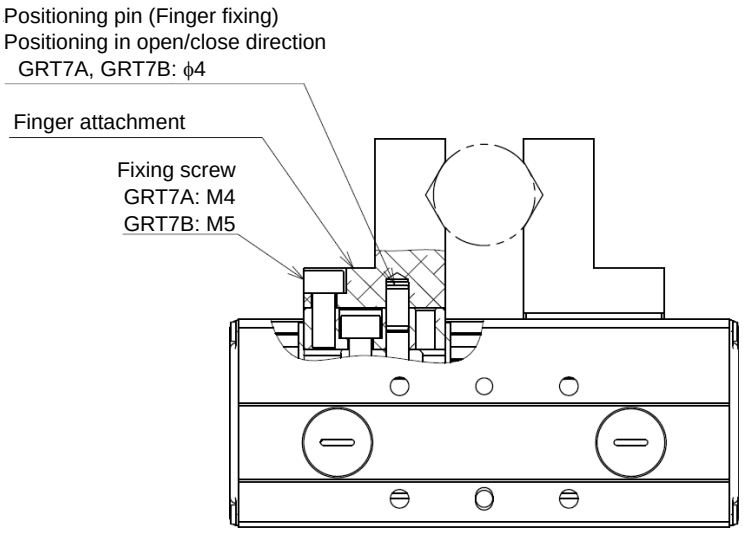

⚠ Caution:

- When attaching or detaching the finger attachment to the finger, hold the finger attachment with a tool such as a wrench to tighten the attachment screw to avoid load being applied to the guide area.
- The tapped hole and the positioning hole on the finger attachment are through holes. Do not attempt to use a long screw that has a length that is more than the effective thread length. Doing so may damage the internal structure.

[2] Installation Dimensions

(1) GRT7A

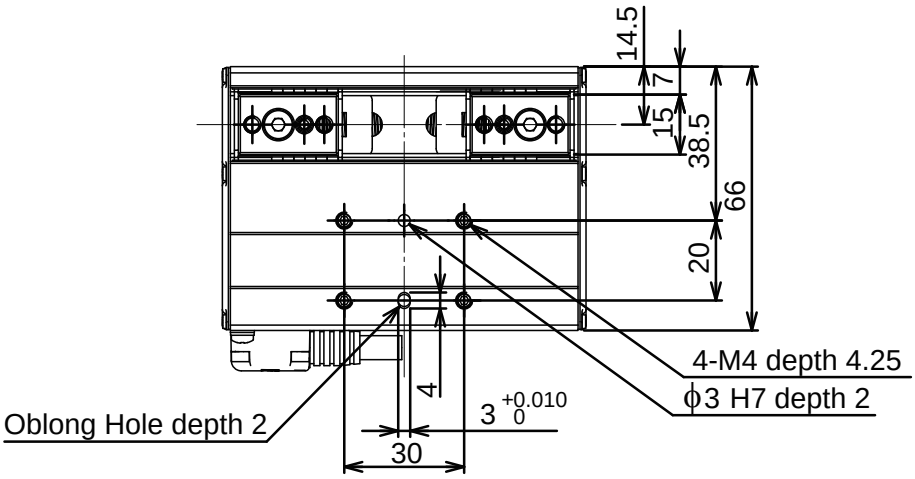

Detail Diagram of Finger

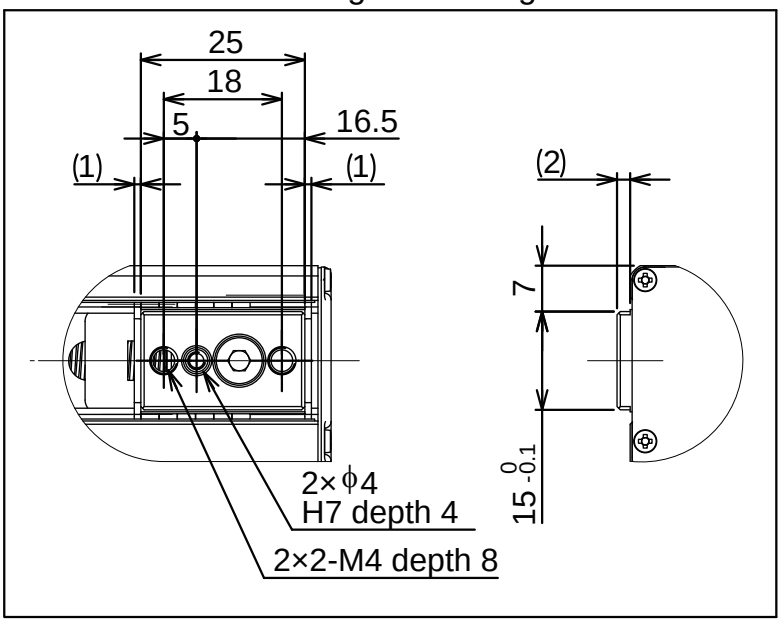

Nominal thread size	Tightening Torque	
	In the case that steel is used for the screw seating surface [N•m (kgf•m)]	In the case that aluminum is used for the screw seating surface [N•m (kgf•m)]
M4	3.59 (0.37)	1.76 (0.18)

About Tightening Screws

- Use a hex socket head cap screw for the attachment to the base.
- It is recommended to use high-tensile screws with ISO-10.9 or more.
- The effective length of engagement for the screw and the threaded hole should be 7.5mm.

⚠ Caution: Pay special attention when selecting the screw length. In case that an inappropriate length of a screw is applied, it may cause damage on the tapped holes or insufficiency in attachment strength, which may result in a drop in the operation accuracy or an unexpected accident.

(2) GRT7B Stroke 40mm

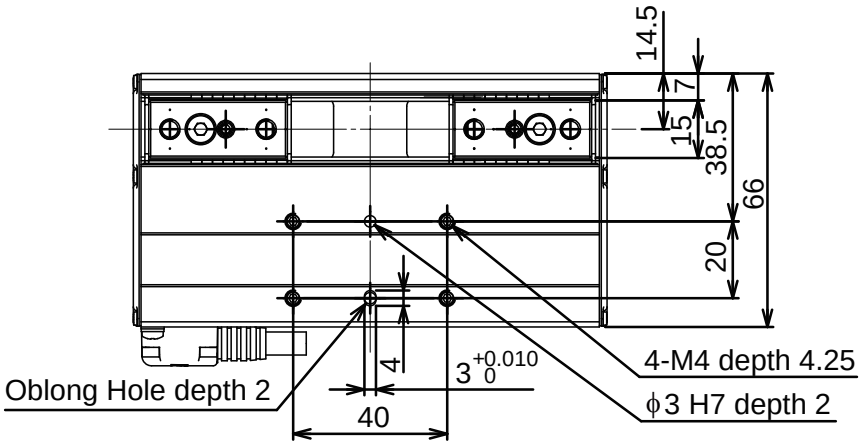

Detail Diagram of Finger

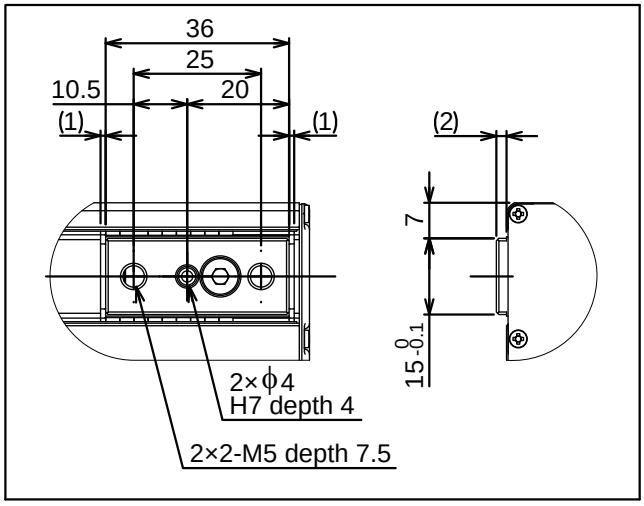

Nominal thread size	Tightening Torque	
	In the case that steel is used for the screw seating surface [N•m (kgf•m)]	In the case that aluminum is used for the screw seating surface [N•m (kgf•m)]
M5	7.27 (0.74)	3.42 (0.35)

About Tightening Screws

- Use a hex socket head cap screw for the attachment to the base.
- It is recommended to use high-tensile screws with ISO-10.9 or more.
- The effective length of engagement for the screw and the threaded hole should be 7.5mm.

⚠ Caution: Pay special attention when selecting the screw length. In case that an inappropriate length of a screw is applied, it may cause damage on the tapped holes or insufficiency in attachment strength, which may result in a drop in the operation accuracy or an unexpected accident.

(3) GRT7B Stroke 80mm

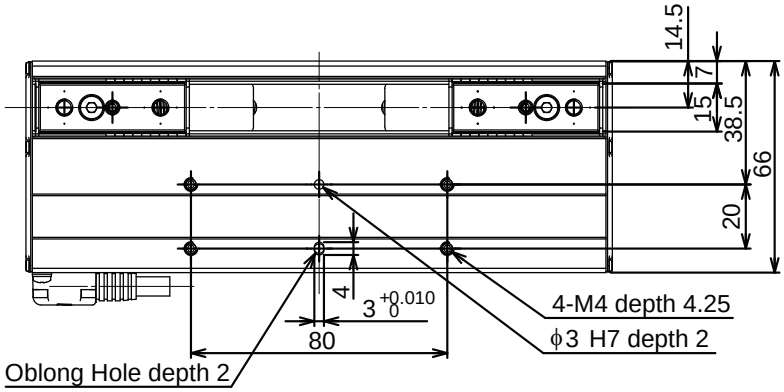

Detail Diagram of Finger

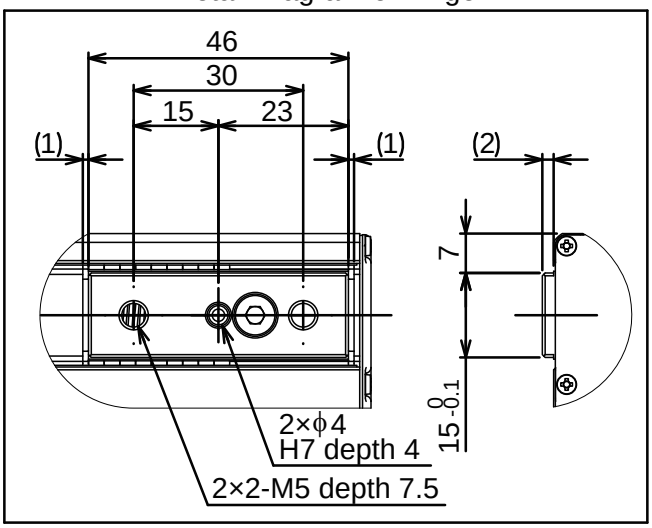

Nominal thread size	Tightening Torque	
	In the case that steel is used for the screw seating surface [N•m(kgf•m)]	In the case that aluminum is used for the screw seating surface [N•m(kgf•m)]
M5	7.27(0.74)	3.42(0.35)

About Tightening Screws

- Use a hex socket head cap screw for the attachment to the base.
- It is recommended to use high-tensile screws with ISO-10.9 or more.
- The effective length of engagement for the screw and the threaded hole should be 7.5mm.

⚠ Caution: Pay special attention when selecting the screw length. In case that an inappropriate length of a screw is applied, it may cause damage on the tapped holes or insufficiency in attachment strength, which may result in a drop in the operation accuracy or an unexpected accident.

3. Connecting with the Controller

Use the IAI dedicated connection cable for the connection of the actuator to the controller.

- If the dedicated connection cable cannot be secured, reduce the load on the cable by allowing it to deflect only by the weight of the cable or wire it in a self-standing cable hose, etc., having a large radius.
- Do not cut and reconnect the dedicated connection cable for extension or shorten the cable.
- Do not pull on the dedicated connection cable or bend it forcibly.

Please consult with IAI if you require a different kind of cable than the one supplied.

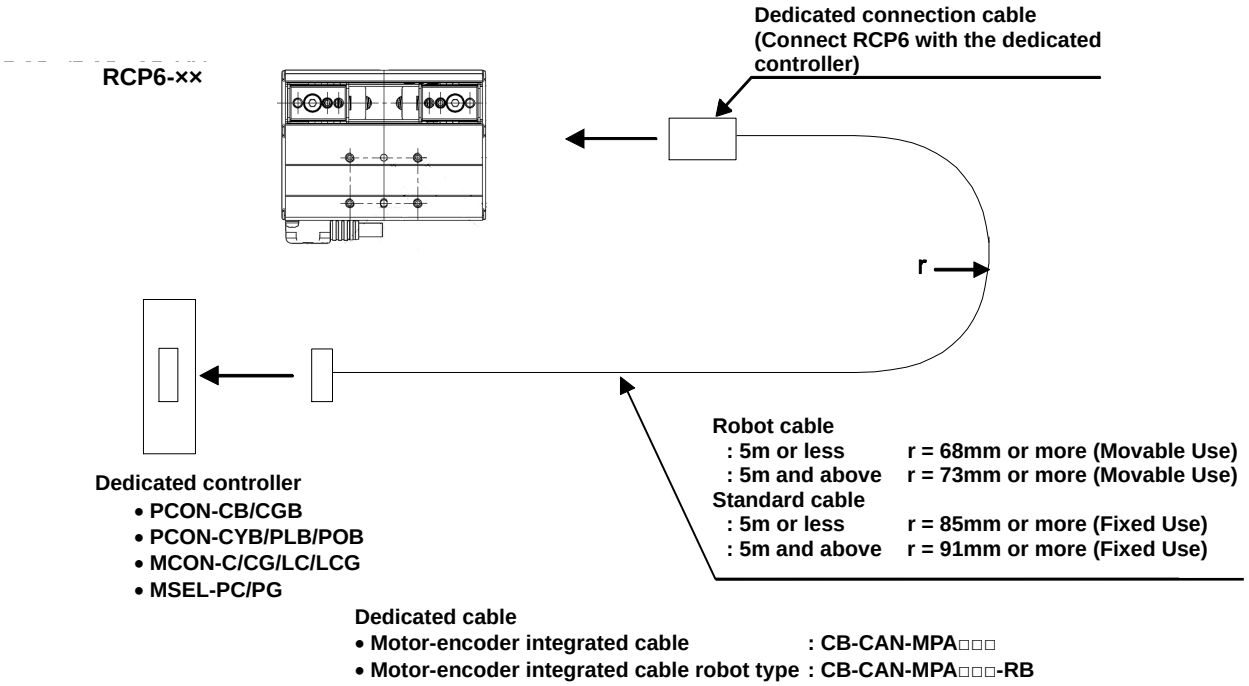

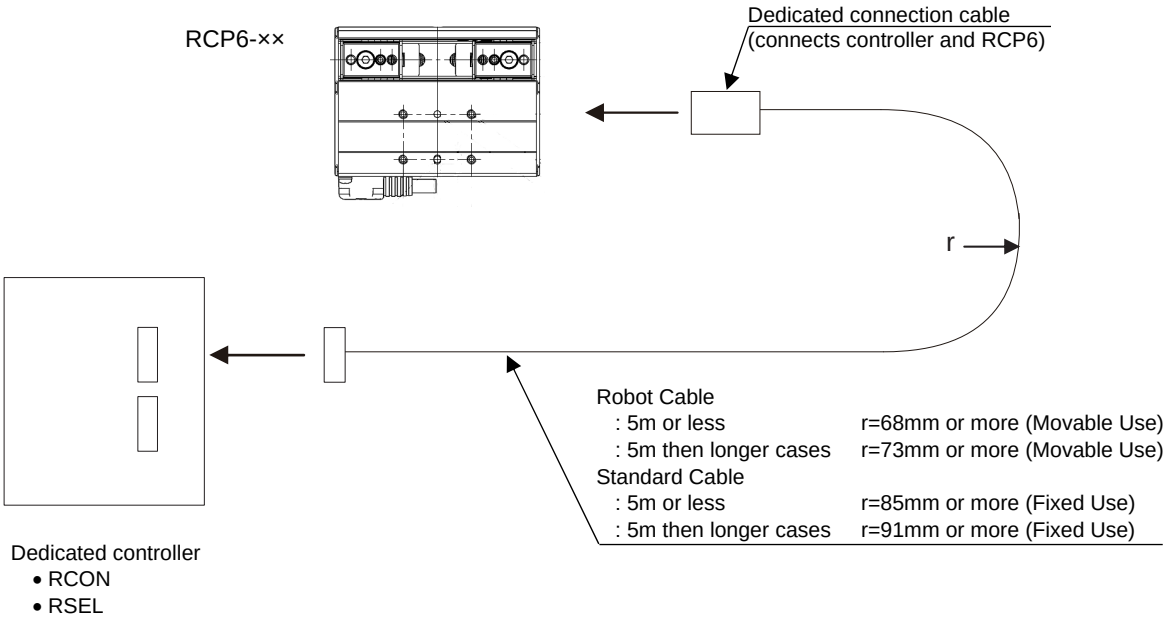

Dedicated cable
- Motor-encoder integrated cables : CB-ADPC-MPA□□□
- Motor-encoder integrated cables robot type : CB-ADPC-MPA□□□-RB

*) □□□ indicates the cable length. Up to 20m can be specified.
Example) 080 = 8m

⚠ Warning: For wiring, please follow the warnings stated below. When constructing a system as the machinery equipment, pay attention to the wiring and connection of each cable so they are conducted properly. Not following them may cause not only a malfunction such as cable breakage or connection failure, or an operation error, but also electric shock or electric leakage, or may even cause a fire.

- Use dedicated cables of IAI indicated in this instruction manual. Contact us if you wish to have a change to the specifications of the dedicated cables.
- Make sure to turn the power off in the process of power line or cable connection or disconnection.
- Do not attempt to cut a dedicated cable with connectors on both ends to extend, shorten or re-joint it.
- Hold the dedicated cable to avoid mechanical force being applied to the terminals and connectors.
- Use a cable pipe or duct to have an appropriate protection when there is a possibility of mechanical damage on a dedicated cable.
- In case a dedicated cable is to be used at a moving part, make sure to lay out the cable without applying any force to pull the connector or extreme bend on the cable. Do not attempt to use the cable with a bending radius below the allowable value.
- Make certain that the connectors are plugged properly. Insufficient connection may cause an operation error, thus it is extremely risky.
- Do not lay out the cables to where the machine runs over them.
- Pay attention to the cable layout so it would not hit peripherals during an operation. In case it does, have an appropriate protection such as a cable carrier.
- When a cable is used hanging on the ceiling, prevent an environment that the cable swings with acceleration or wind velocity.
- Make sure there is not too much friction inside the cable storage equipment.
- Do not apply radiated heat to power line or cables.
- Do not bend the cable in the area from the connector tip inward to 150mm on both ends.
  CB-CAN-MPA□□□, CB-CAN-MPA□□□-RB, CB-ADPC-MPA□□□, CB-ADPC-MPA□□□-RB

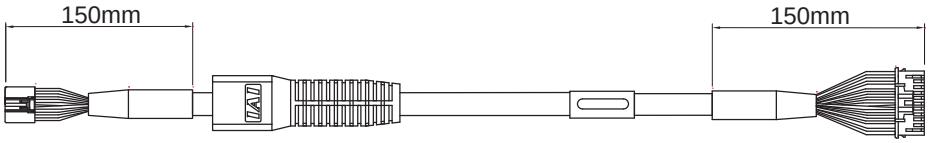

- Have a sufficient radius for bending, and avoid a bend concentrating on one point.

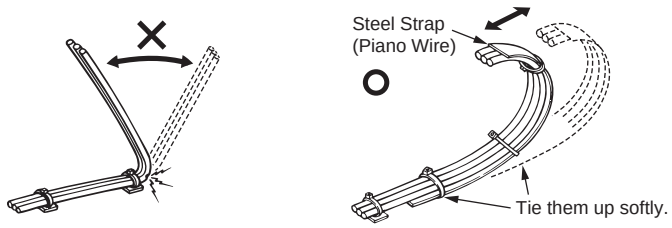

- Do not let the cable bend, kink or twist.

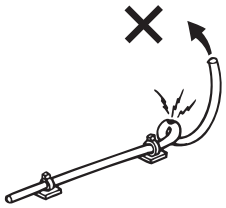

- Do not pull the cable with a strong force.

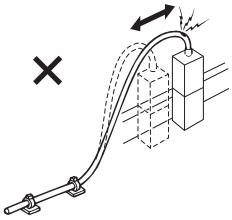

- Pay attention not to concentrate the twisting force to one point on a cable.

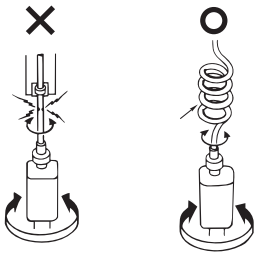

- Do not pinch, drop a heavy object onto or cut the cable.

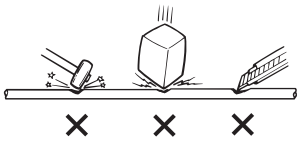

- When a cable is fastened to affix, make sure to have an appropriate force and do not tighten too much.

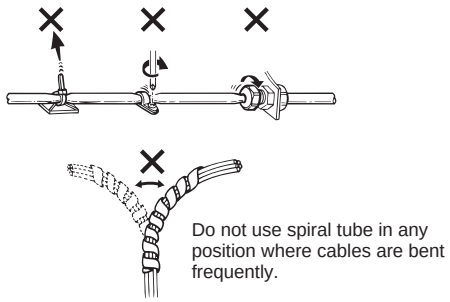

- PIO line, communication line, power and driving lines are to be put separately from each other and do not tie them together. Arrange so that such lines are independently routed in the duct.

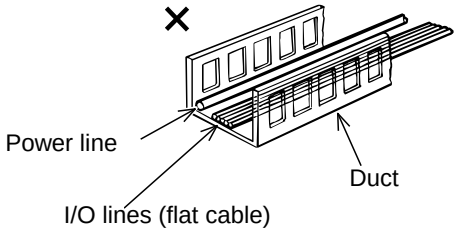

Follow the instructions below when using a cable carrier.

- If there is an indication to the cable for the space factor in a cable carrier, refer to the wiring instruction given by the supplier when storing the cable in the cable carrier.
- Avoid the cables to get twined or twisted in the cable carrier, and also to have the cables move freely and do not tie them up. (Avoid tension being applied when the cables are bent.)
  Do not pile up cables. It may cause faster abrasion of the sheaths or cable breakage.

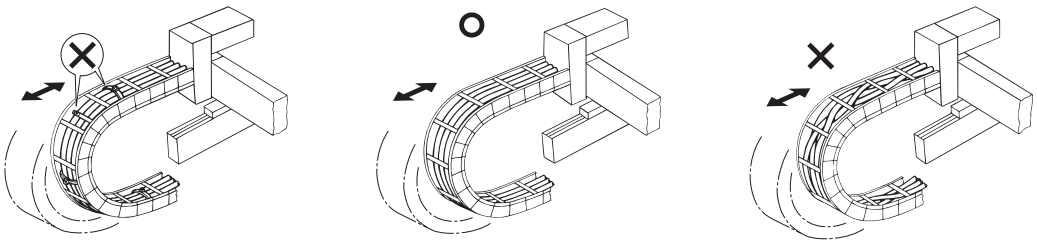

4. Operation

4.1 Operation of the Fingers

[1] Movement Stroke
The stroke stated in the specifications is the sum of the movement distance for both fingers. The movement distance of one finger is 1/2 of the stroke.

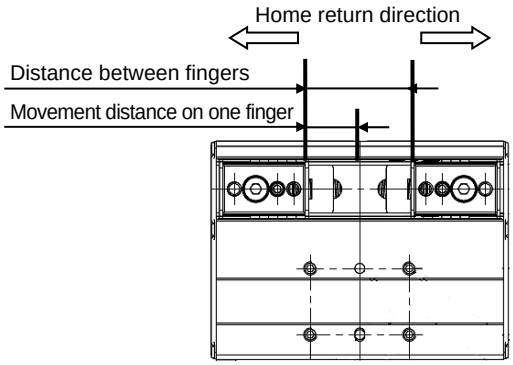

[2] Home Return Direction
The open side moving end of the finger is the home position.
The home position is on the closing end for the home reversed type (NM).

[3] Position Indication
The movement distance from the home position of one finger to the closing side is the position value.
(Indication of max. position value = 1/2 of stroke)

[4] Indication of Speed and Acceleration
Indication value is the value for one finger.
Relative speed and acceleration are double of the indicated values.

		Slide Type				
		GRT7A	GRT7B			
			Gear Ratio Pattern: 1		Gear Ratio Pattern: 2	
Stroke (mm)		30	40	80	40	80
Movement Distance of One Side (mm)		15	20	40	20	40
Distance between Fingers (mm)	Max.	33	43	83	43	83
	Min.	3	3	3	3	3

4.2 Release of the Gripped Work Piece

This gripper possesses a structure to keep the grip force by the self-locking feature even when the servo is OFF or the power to the controller is OFF.
When it is necessary to remove a workpiece off the gripper while the power is OFF, it you need to either twist the open/close screw with using a slotted screwdriver or take off the finger attachment on one side.

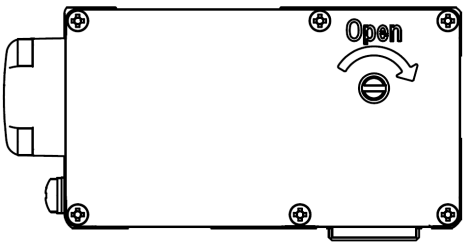

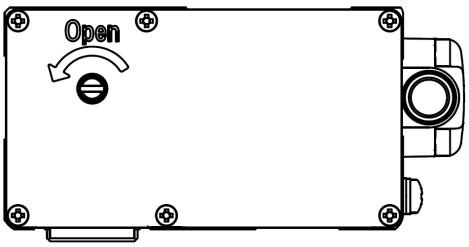

⚠ Caution:

- When the work piece removal is required at the power OFF, do not attempt to pull off the work piece forcefully to remove it. Remove the work piece either by twisting the open/close screw or detaching one side of the finger attachment. Pulling off the work piece forcefully may cause damage to the product.
- Remove the gripped work piece when the device would not be used for long time. Leaving the product with a work piece being held for a long term may drop the performance or give a bad impact to the guide.

5. Maintenance and Inspection

5.1 Inspection Items and Schedule

Perform maintenance and inspection at the intervals specified below.
This schedule assumes that the actuator is operated 8 hours per day.
If the actuator is operated at a higher utilization, such as when the machine is used continuously day and night, reduce the inspection intervals accordingly.

	Visual inspection of exterior	Greasing
Start-up inspection	○	
After 1 month of operation	○	
After 6 months of operation	○	○
Every 6 months thereafter	○	○
Every 1 year	○	

⚠ Caution: As it is necessary to have an adjustment in a factory for those described below, do not attempt to have a work to disassemble or cut the cables.
- Disassembly of the motor
- Disassembly of the guide part
- Disassembly of the finger feeding mechanism part
- Disassembly of the bearing
- Cutting of the cable

5.2 Visually Inspecting the Exterior

Visually check the exterior of the following items.

Actuator	Loosening of actuator mounting screws
Cables	Scratches, connector engagement
Overall	Noise, vibration

- If the actuator is installed vertically, certain conditions may cause grease to drip from the guide. Please ensure that proper cleaning is performed and grease is replenished.

5.3 Cleaning

- Always keep the outer surface clean.
- Wipe dirty areas using a soft cloth, etc.
- Do not blow highly compressed air onto the actuator, as it may cause dust to enter the actuator through gaps between parts.
- Do not use petroleum-based solvent as it damages resin and coated surfaces.
- To remove stubborn stains, take neutral detergent or alcohol into a soft cloth, etc., and wipe the area gently.

5.4 Grease Supply

5.4.1 Applicable Greases for the Guide

[1] Applicable Greases

IAI uses the following grease in our plant.

Guide	Idemitsu Kosan	Daphne Grease MP No. 2

Other companies also sell similar types of grease. For details, give the above grease name to the manufacturer you want to purchase from and ask what corresponding product they have available.

Showa Shell Oil	Albania Grease S2
Mobil Oil	Unirex N2

⚠ Warning: Never use fluorine-based grease. Mixing fluorine-based grease with lithium-based grease not only reduces the performance of the grease, it may even cause damage to the actuator.

[2] How to Apply Grease

Apply grease by using a spatula between the guide and fingers (steel balls) (where marked with a circle) or apply grease by using a grease injector, and then slide the guide to have the grease spread out evenly.
Wipe away the excess grease and splashed grease at last.

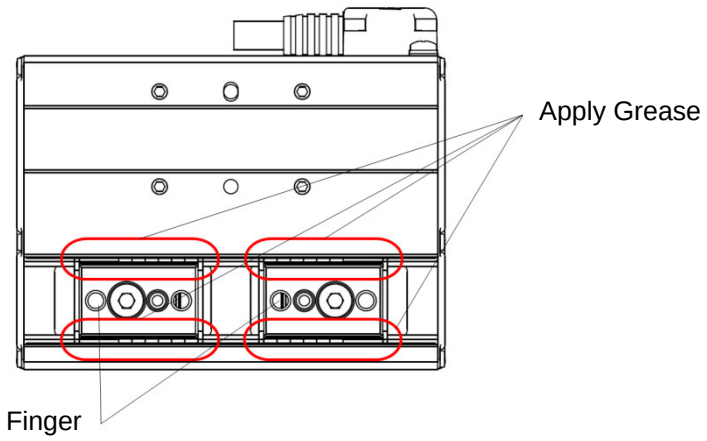

⚠ Caution: In case the grease got into your eye, immediately go to see the doctor to get an appropriate care. After finishing the grease supply work, wash your hands carefully with water and soap to rinse the grease off.

5.4.2 Trapezoid Thread Area

[1] Applicable Greases

IAI uses the following grease in our plant.

Trapezoid Thread	Kyodo Yushi	Multitemp AC-D

⚠ Warning: Never use fluorine-based grease. Mixing fluorine-based grease with lithium-based grease not only reduces the performance of the grease, it may even cause damage to the actuator.

[2] How to Apply Grease

Take off the hole caps.
Use a stick to apply grease to the screw inside.
Slide the fingers to have the grease spread out evenly after apply grease.
Put the hole caps back on after applying grease.

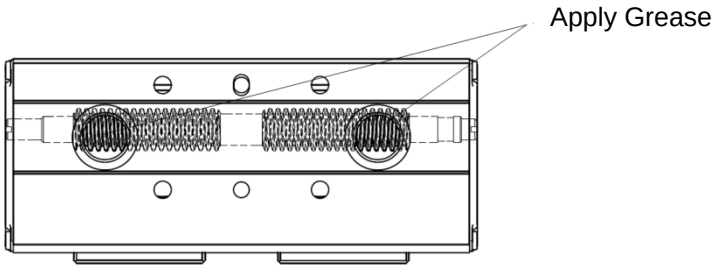

⚠ Caution: In case the grease got into your eye, immediately go to see the doctor to get an appropriate care.
After finishing the grease supply work, wash your hands carefully with water and soap to rinse the grease off.

6. External Dimensions

6.1 GRT7A

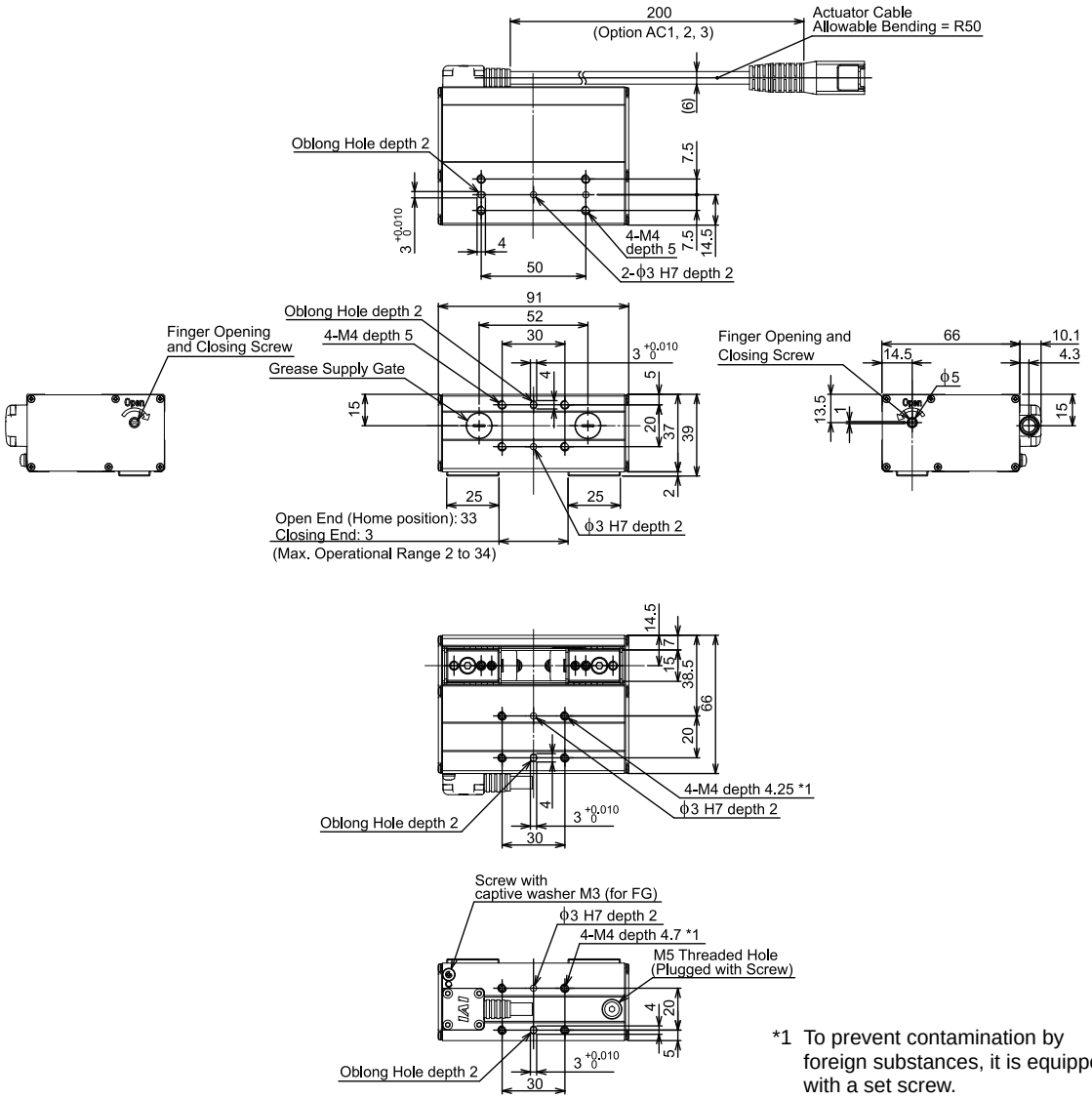

*1 To prevent contamination by foreign substances, it is equipped with a set screw.

Detail Diagram of Finger

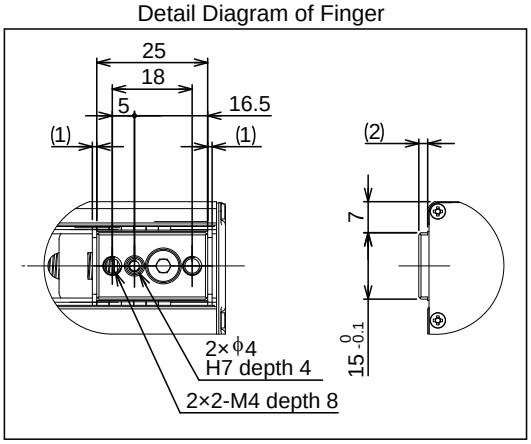

Cable Ejection Direction

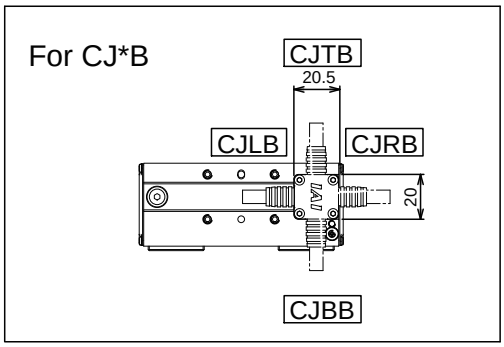
For CJ*B
CJTB
20.5
CJLB
CJRB
20
CJBB

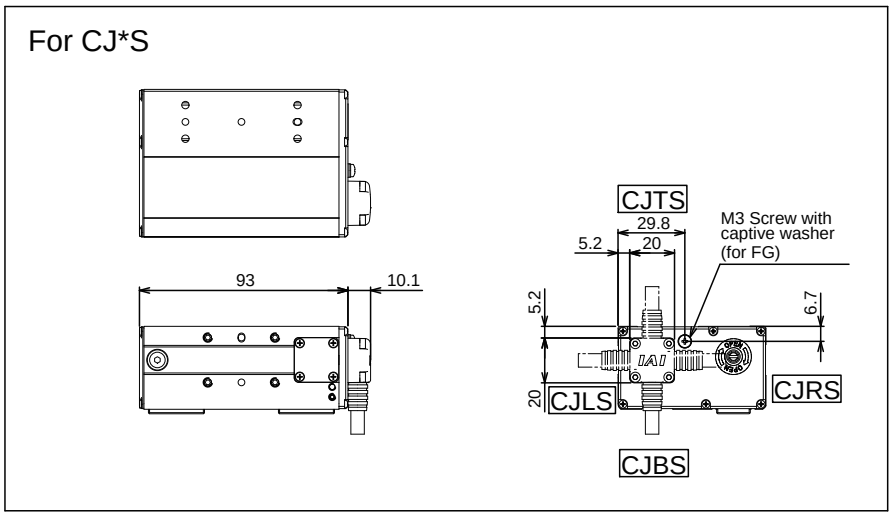
For CJ*S
93
10.1
CJTS
29.8
5.2
20
M3 Screw with
captive washer
(for FG)
5.2
6.7
20
CJLS
CJRS
CJBS

Mass	0.46kg

6.2 GRT7B Stroke 40mm

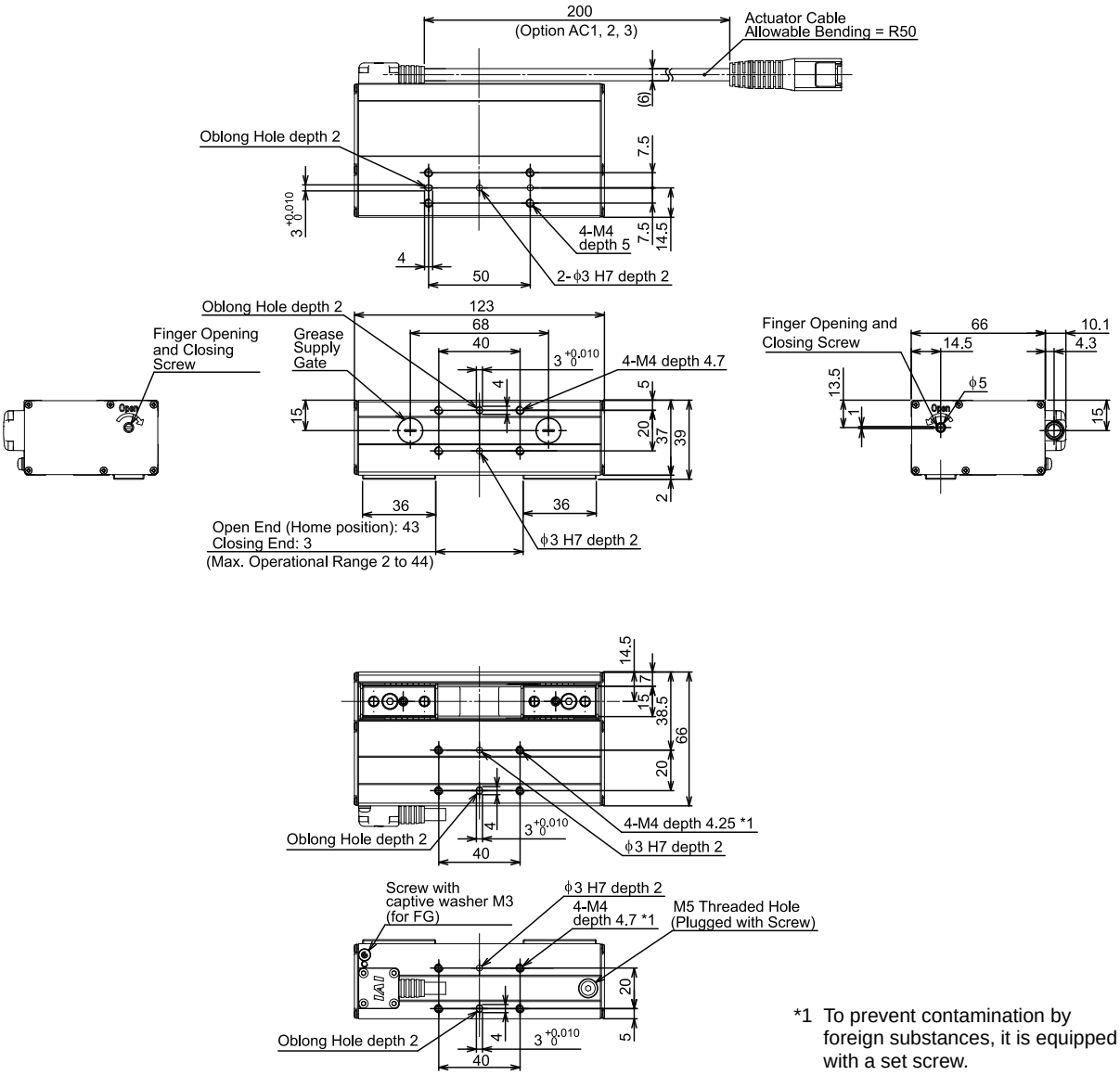

*1 To prevent contamination by foreign substances, it is equipped with a set screw.

Detail Diagram of Finger

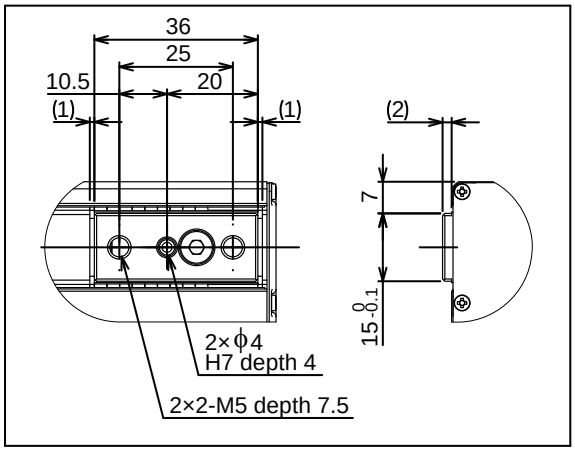

Cable Ejection Direction

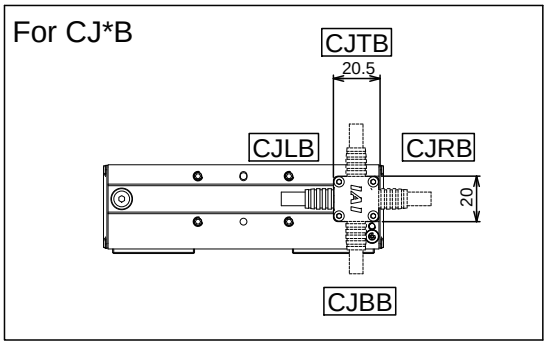

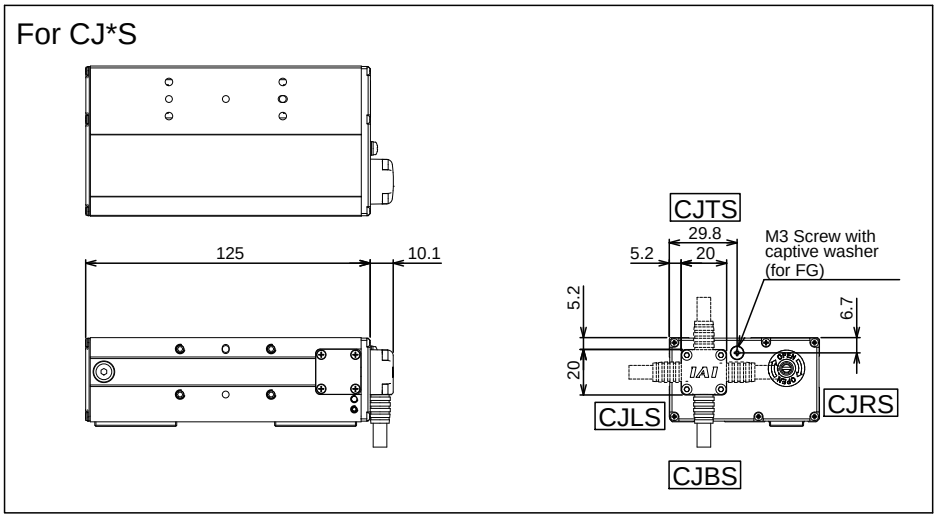

Mass	Stroke 40mm	0.68kg

6.3 GRT7B Stroke 80mm

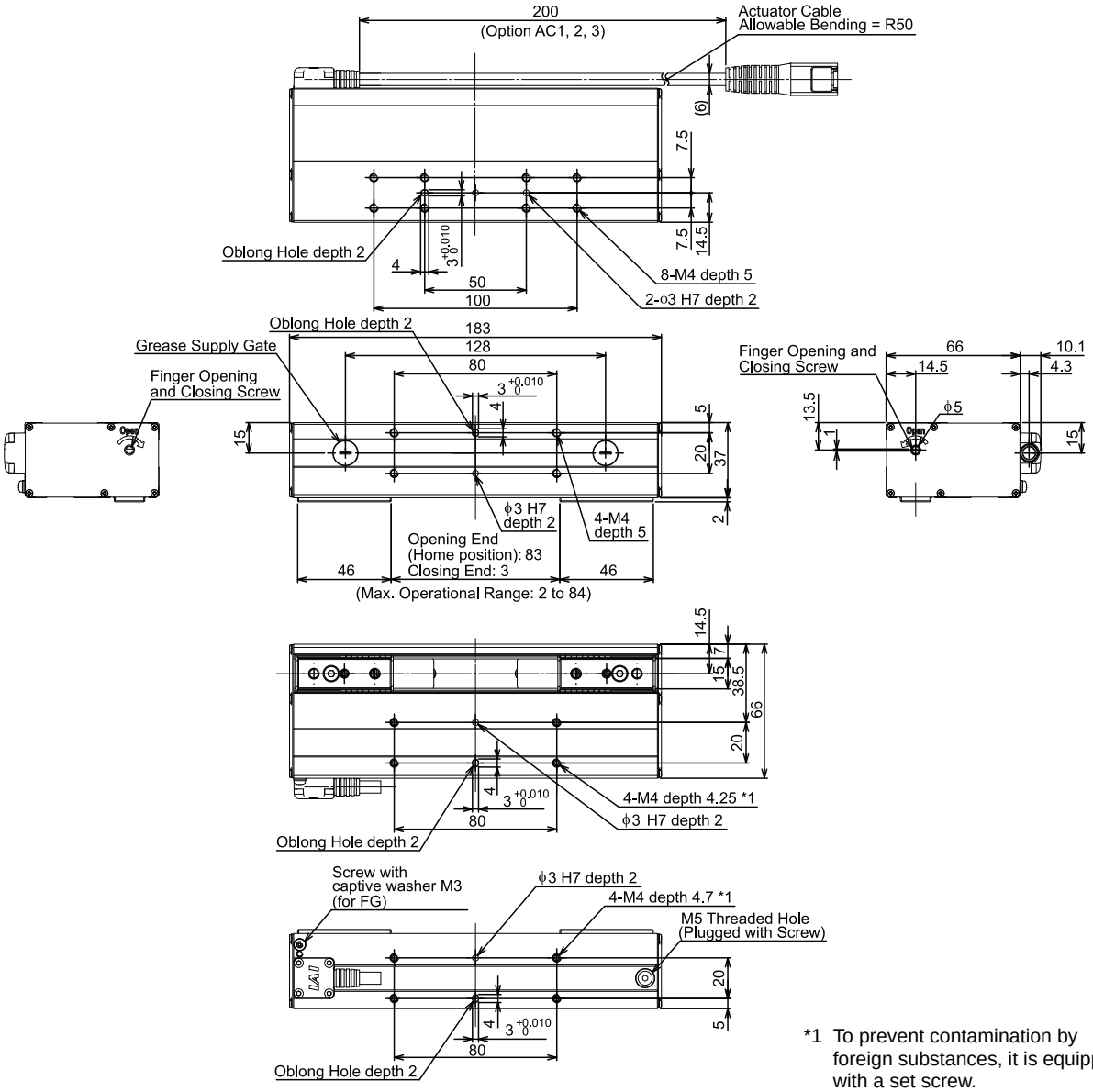

*1 To prevent contamination by foreign substances, it is equipped with a set screw.

Detail Diagram of Finger

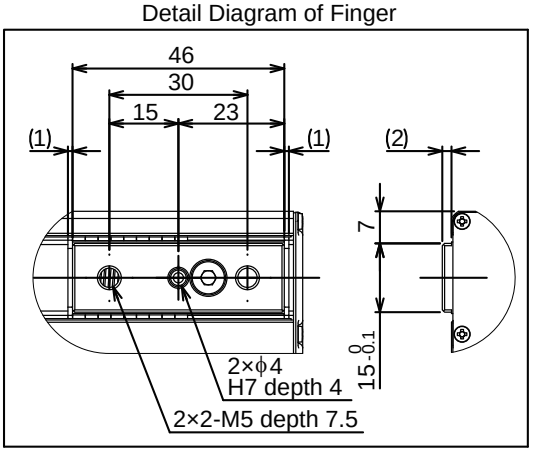

Cable Ejection Direction

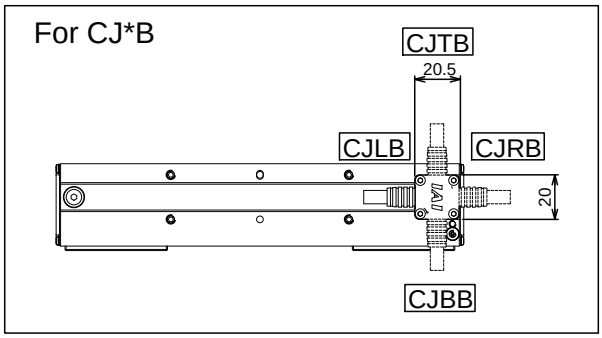

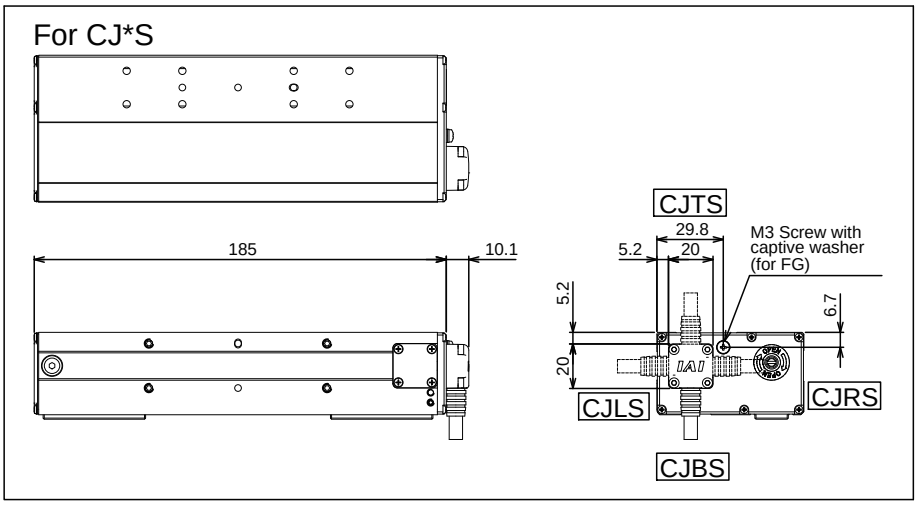

Mass	Stroke 80mm	0.84kg

7. Warranty

7.1 Warranty Period

One of the following periods, whichever is shorter:
- 18 months after shipment from IAI
- 12 months after delivery to the specified location
- 2,500 hours of operation

7.2 Scope of the Warranty

Our products are covered by warranty when all of the following conditions are met. Faulty products covered by warranty will be replaced or repaired free of charge:
(1) The breakdown or problem in question pertains to our product as delivered by us or our authorized dealer.
(2) The breakdown or problem in question occurred during the warranty period.
(3) The breakdown or problem in question occurred while the product was in use for an appropriate purpose under the conditions and environment of use specified in the instruction manual and catalog.
(4) The breakdown of problem in question was caused by a specification defect or problem, or by a quality issue with our product.

Note that breakdowns due to any of the following reasons are excluded from the scope of warranty:
- Anything other than our product
- Modification or repair performed by a party other than us (unless we have approved such modification or repair)
- Anything that could not be easily predicted with the level of science and technology available at the time of shipment from our company
- A natural disaster, man-made disaster, incident or accident for which we are not liable
- Natural fading of paint or other symptoms of aging
- Wear, depletion or other expected result of use
- Operation noise, vibration or other subjective sensation not affecting function or maintenance

Note that the warranty only covers our product as delivered and that any secondary loss arising from a breakdown of our product is excluded from the scope of warranty.

7.3 Honoring the Warranty

As a rule, the product must be brought to us for repair under warranty.

7.4 Limited Liability

(1) We shall assume no liability for any special damage, consequential loss or passive loss such as a loss of expected profit arising from or in connection with our product.
(2) We shall not be liable for any program or control method created by the customer to operate our product or for the result of such program or control method.

7.5 Conditions of Conformance with Applicable Standards/Regulations, Etc., and Applications

(1) If our product is combined with another product or any system, device, etc., used by the customer, the customer must first check the applicable standards, regulations and/or rules. The customer is also responsible for confirming that such combination with our product conforms to the applicable standards, etc. In such a case we will not be liable for the conformance of our product with the applicable standards, etc.
(2) Our product is for general industrial use. It is not intended or designed for the applications specified below, which require a high level of safety. Accordingly, as a rule our product cannot be used in these applications. Contact us if you must use our product for any of these applications:
    - Medical equipment pertaining to maintenance or management of human life or health
    - A mechanism or mechanical equipment intended to move or transport people (such as a vehicle, railway facility or aviation facility)
    - Important safety parts of mechanical equipment (such as safety devices)
    - Equipment used to handle cultural assets, art or other irreplaceable items
(3) Contact us at the earliest opportunity if our product is to be used in any condition or environment that differs from what is specified in the catalog or instruction manual.

7.6 Other Items Excluded from Warranty

The price of the product delivered to you does not include expenses associated with programming, the dispatch of engineers, etc. Accordingly, a separate fee will be charged in the following cases even during the warranty period:

- Guidance for installation/adjustment and witnessing of test operation
- Maintenance and inspection
- Technical guidance and education on operating/wiring methods, etc.
- Technical guidance and education on programming and other items related to programs

Change History

Revision Date	Description of Revision
June 2017	First edition
July 2018	1C edition Pg. 20 Vertical lines on right for H_C and H_G moved to align with center line
July 2018	1D edition Contents added for RCON
March 2020	1E edition Pg. 25 Electric wire color changed Pg. 54 Grease changed from Daphne Eponex Grease No. 2 to Daphne Grease MP No. 2
September 2024	1F edition Pg. 9 Complied with RoHS3 Directive Pg. 13 Enclosed DVD abolished 1.1.2 Descriptions added for Instruction Manuals for the Controllers Related to this Product Pg. 14 1.1.4 Correction made for controllers applicable for model code Pg. 55 Correction made to grease name Minor corrections made
October 2025	1G edition Changes due to discontinuation of including the First Step Guide
July 2026	1H edition Terms integrated (cable carrier)

Manual No.:ME3767-1H (July 2026)

IAI Corporation

Head Office: 1210 Ihara Shimizu-KU Shizuoka City Shizuoka 424-0114, Japan
TEL +81-54-364-5105 FAX +81-54-364-2589
website: www.iai-robot.co.jp/

IAI America, Inc.

Head Office: 2690 W. 237th Street, Torrance, CA 90505
TEL +1-310-891-6015 FAX +1-310-891-0815
Chicago Office: 110 East State Parkway, Schaumburg, IL 60173
TEL +1-847- 908-1400 FAX +1-847-908-1399
Atlanta Office: 1220 Kennestone Circle, Suite 108, Marietta, GA 30066
TEL +1-678-354-9470 FAX +1-678-354-9471
website: www.intelligentactuator.com

Technical Support available in Europe

IAI Industrieroboter GmbH

Ober der Röth 4, D-65824 Schwalbach am Taunus, Germany
TEL +49(0)6196-88950 FAX +49(0)6196-889524
website: www.iai-automation.com

Technical Support available in Great Britain

LC Automation
control & safety

Duttons Way, Shadsworth Business Park, Blackburn, Lancashire, BB1 2QR, United Kingdom
TEL +44(0) 1254-685900
website: www.lcautomation.com

IAI (Shanghai) Co., Ltd.

SHANGHAI JIAHUA BUSINESS CENTER A8-303, 808, Hongqiao Rd. Shang hai 200030, China
TEL +86-21-6448-4753 FAX +86-21-6448-3992
website: www.iai-robot.com

IAI Robot (Thailand) Co., Ltd.

825 PhairojKijja Tower 7th Floor, Debaratana RD., Bangna Nuea, Bangna, Bangkok 10260, Thailand
TEL +66-2-361-4458 FAX +66-2-361-4456
website: www.iai-robot.co.th

The information contained in this document is subject to change without notice for purposes of product improvement.
Copyright © 2026.Jul. IAI Corporation. AII rights reserved.

26.07.000